Sewer System Management Plan

Revised On: May 2, 2023

Contributors: Roland P. Williams, General Manager

Landon Lochrie, Associate Engineer

Gregory Williams, Collection System Maintenance Supervisor

(THIS PAGE INTENTIONALLY LEFT BLANK)

TABLE OF CONTENTS

ELEMENT NO. **PAGE NO.**

Executive Summary 8
Element 1 - Goals 10
Element 2 - Organization 16
Element 3 - Legal Authority 23
Element 4 - Operation and Maintenance Program 25
Element 5 - Design and Performance Standards 32
Element 6 - Spill Emergency Response Plan 36
Element 7 - Fats, Oils, and Grease (FOG) Control Program 48
Element 8 - System Evaluation and Capacity Assurance Plan 51
Element 9 - Monitoring, Measurement, and Program Modifications 54
Element 10 - SSMP Program Audits 58
Element 11 - Communication Program 60

LIST OF APPENDICES

Appendix A ..... CVSan Strategic Plan
Appendix B ..... Staff Names, Positions, and Contact Information
Appendix C ..... Collection System Maps
Appendix D ..... Collection System Asset Inventory
Appendix E ..... CVSan Budget
Appendix F ..... Historical SSO Events
Appendix G ..... Gravity Sewer Asset Management Plan
Appendix H ..... Pump Station Asset Management Plan
Appendix I ..... Pump Station Maintenance Log
Appendix J ..... 10-Year Capital Improvement Plan
Appendix K ..... Training Schedule
Appendix L ..... Equipment and Vehicle Inventory
Appendix M ..... SERP – Field Packet
Appendix N ..... SERP – Management Packet

Appendix O ..... FOG Outreach Materials
Appendix P ..... Wastewater Collection System Master Plan
Appendix Q ..... Performance Metrics and Evaluation
Appendix R ..... SSMP Update Tracking Log
Appendix S ..... SSMP Audit Report & Action Plan
Appendix T..... Board of Directors Approval and Communications

LIST OF ACRONYMS AND ABBREVIATIONS

AE ..... Associate Engineer
AT ..... Administrative Technician
Board ..... Board of Directors
CAC ..... Community Advisory Committee
CalOES ..... California Office of Emergency Services
CCTV ..... Closed Circuit Television
CIP ..... Capital Improvement Program
CIWQS ..... California Integrated Water Quality System
CMMS ..... Computerized Maintenance Management System
CRT ..... Chemical Root Treatment
CSMD ..... Collection System Maintenance Department
CSMS ..... Collection System Maintenance Supervisor
CSMT ..... Collection System Maintenance Technician
CSMWT ..... Collection System Maintenance Worker Trainee
CSMW ..... Collection System Maintenance Worker
CVSan ..... Castro Valley Sanitary District
CWEA ..... California Water Environment Association
DH ..... Department Heads
EPA ..... Environmental Protection Agency
ET ..... Engineering Technician
FOG ..... Fats, Oils, and Grease
FSE ..... Food Service Establishment
GASB ..... Governmental Account Standards Board
GIS ..... Geographic Information System
GM ..... General Manager
I&I ..... Inflow and Infiltration
LAIF ..... Local Agency Investment Fund
MRP ..... Monitoring and Reporting Program
NPDES ..... National Pollutant Discharge Elimination System

O&M.....Operations and Maintenance

PM ..... Preventative Maintenance

PWWF ..... Peak Wet Weather Flow

RWQCB .....Regional Water Quality Control Board

SCADA .....Supervisory Control and Data Acquisition

SCSMW .....Senior Collection System Maintenance Worker

SERP .....Spill Emergency Response Plan

SSMP.....Sewer System Management Plan

SSO ..... Sanitary Sewer Overflow

SSS WDR. .....Statewide General Waste Discharge Requirements for Sanitary Sewer Systems

SWRCB .....State Water Resources Control Board

WDR ..... Waste Discharge Requirement

(THIS PAGE INTENTIONALLY LEFT BLANK)

EXECUTIVE SUMMARY

This Sewer System Management Plan (SSMP) has been prepared in compliance with requirements of the State Water Resource Control Board (SWRCB) pursuant to Order No. 2006-0003, Statewide General Waste Discharge Requirements for Sanitary Sewer Systems (SSS WDR), and Order No. WQ 2013-0058-EXEC, which amends the Monitoring and Reporting Program of the original SSS WDR. The SSS WDR requires development and implementation of a written SSMP and defines 11 mandatory SSMP elements. The SSS WDR also defines associated monitoring, record keeping, reporting, and public notification requirements.

The 2023 update of the SSMP is based upon the Castro Valley Sanitary District's (CVSan's) original SSMP completed in 2014. The SSMP is a living document and is updated as needed to reflect changes to the SSMP elements. The intent of the 2023 update of the SSMP is to continue to meet the requirements of the SSS WDR.

This document presents 11 elements in the order presented in the SSS WDR:

- Element 1 – Goals
- Element 2 – Organization
- Element 3 – Legal Authority
- Element 4 – Operation and Maintenance (O&M) Program
- Element 5 – Design and Performance Standards
- Element 6 – Spill Emergency Response Plan (SERP)
- Element 7 – Fats, Oils, and Grease (FOG) Control Program
- Element 8 – System Evaluation and Capacity Assurance Plan
- Element 9 – Monitoring, Measurement, and Program Modifications
- Element 10 – SSMP Program Audits
- Element 11 – Communication Program

(THIS PAGE INTENTIONALLY LEFT BLANK)

ELEMENT 1 - GOALS

SWRCB WDR:

The goal of the Sanitary Sewer Management Plan (SSMP) is to provide a plan and schedule to properly manage, operate, and maintain all parts of the sanitary sewer system. This will help reduce and prevent sanitary sewer overflows (SSOs) as well as mitigate any SSOs that do occur.

The SSMP has been developed as a supplement to CVSan's 2019-2024 Strategic Plan (see Appendix A). The Strategic Plan identifies three guiding principles that provide direction to achieving the SSMP goals. The guiding principles are: the CVSan Mission Statement, the Vision Statement, and the Core Values, which are further broken down as Strengths, Challenges, Opportunities, and the Action Plan.

1.1 Mission Statement

CVSan is a public agency that provides wastewater and solid waste services (recycling, organics, and garbage) to the community of Castro Valley. This includes maintaining 156 miles of sewer pipes, eight pump stations, and 90 public garbage and recycling cans on Castro Valley Boulevard. CVSan also owns 25% of the Castro Valley/Oro Loma Wastewater Treatment Plant (WWTP) and participates in the management of the WWTP's ongoing operations. Quality service and reasonable rates are standard practice at CVSan.

CVSan was founded in 1939 and serves over 61,000 residents and 580 businesses in an 8.5 square mile area.

1.2 Vision Statements

CVSan will be leaders in creating resources from wastewater and achieving zero waste.

1.3 Core Values

As evidenced by the awards given to the CVSan organization over the last strategic planning period, CVSan staff accomplished a lot of good work with a relatively small staff. CVSan leaders are committed to maintaining a learning organization. There will be an organized effort to capture and document the core values and culture of the organization during this next planning period. These values in relation to the Wastewater Department are broken into three sections and an Action Plan below.

A. Strengths

- CVSan has award winning wastewater programs (most recently California Water Environment Association (CWEA) Collections System of the Year at the state level).
- CVSan manages its finances carefully, maintains an impressive AA Bond rating, and maintains adequate reserves to minimize financial uncertainties to its ratepayers.
- CVSan has high quality staff and is a well-run organization as evidenced by a greater than 80 percent approval/confidence rating from a public input survey taken in 2018.
- CVSan Board of Directors operate well and have healthy Board dynamics. They encourage the formulation of strong partnerships at the local level as well as working with other organizations through the California Association of Sanitary Agencies (CASA) where the CVSan General Manager is on the Board of Directors.
- CVSan has placed a high priority on maintaining its infrastructure, resulting in a low occurrence of overflows.
- CVSan has made safety a core value in all its activities, resulting in a record low number of lost time accidents.
- CVSan's outreach is very effective and includes communications through social media and the Castro Valley Forum, as well as educational materials on its website and in its brochures. CVSan makes special outreach efforts to connect with the community to maintain transparency through its Community Advisory Committee (CAC) as well as by conducting field trips to educate its ratepayers.
- CVSan proactively implements pioneering projects ahead of regulations that require innovation. A great example is the Ecotone Slope Project being implemented to reduce nutrients in wastewater, and the Private Sewer Lateral Program to reduce inflow and infiltration (I&I).

B. Challenges

- CVSan would like to increase visibility on the positive efforts relative to its wastewater functions.
- CVSan would like to decrease high Inflow and Infiltration (I&I) in its wastewater collection system.

- CVSan is negotiating the terms of the East Bay Dischargers Authority (EBDA) Agreement.
- CVSan has kept rates within 10 percent of the median rate for Alameda County and would like to continue to do so.
- CVSan is aware of the need to maintain public acceptance related to spending funds on infrastructure such as new facilities that will consolidate operations.
- CVSan will continue implementing its succession planning and add focus on management level positions and legal counsel.
- CVSan staffing has grown from 12 employees to 25 employees who are not centrally located.
- CVSan would like to retain quality staff and minimize turnover.
- CVSan needs to adapt to staff unionizing and avoid an “us versus them” mentality while maintaining its nimble processes relative to salary and conditions of employment. A new employee contract will need to go through a formal negotiation process.
- CVSan’s service area is near build-out which reduces income from new connection fees.
- CVSan wants to continue to provide staff with development opportunities to be a high-performance organization.
- CVSan operates a wastewater collection system in a seismically active region.
- CVSan desires to have a long-term master plan for its wastewater treatment plant co-owned with Oro Loma Sanitary District (OLSD) that addresses the investments needed to meet current and future regulations, seismic activities, biosolids handling into the future, and sea level rise.
- CVSan faces continually changing regulations associated with wastewater treatment and potential fines related to collection system spills.
- CVSan should focus on completing its current set of capital projects (capacity improvement and pump station rehabilitation).
- Given the fast pace of change related to maintaining cybersecurity, CVSan should identify ways to improve the security and redundancy of its Information Technology (IT).

- CVSan would like to continue to improve its state-of-the-art Information Technology (IT)

C. Opportunities

- CVSan is interested in developing recycled water projects in partnership with the other EBDA member agencies (local purple pipe, Indirect Potable, Livermore-Amador Valley Water Management Agency (LAVWMA) pipeline/Dublin San Ramon Services District (DSRSD).
- CVSan would like to study the potential to consolidate all staff at one location and potentially construct a local HHW facility.
- CVSan is interested in exploring sustainable energy resource opportunities.
- CVSan would like to continue to adopt new technologies such as smart lids, flow meters, and sonar testing.

D. Action Plan

- Continue to aggressively invest in the wastewater collection system, avoid spills, and compete in CWEA annual challenges.
- Continue financial best management practices, maintaining financial transparency, and competing in public agency competitions related to financial management.
- Continue CVSan's track record of providing exceptional customer service and being a high-performance organization.
- Board to continue to work with staff to maintain local and regional partnerships and create new partnerships at the state level through involvement with CASA.
- Continue CVSan's excellent record of complying with all applicable federal, state, and local laws. Continue to avoid spills.
- Continue to make safety a core value and maintain high quality safety manuals and training.
- Continue to invest CVSan time and resources into community outreach that informs the ratepayers through transparency and educates all residents on the work being done to maintain the strengths, and address the challenges and opportunities, laid out in this Strategic Plan.

- Continue to pursue proactive and innovative practices that can help meet anticipated new regulations and environmental laws.
- Expand educational outreach program to include wastewater.
- Explore teaching a wastewater program at the same time water is covered as a part of the curriculum.
- Explore conducting wastewater treatment plant field trips at the time water is a part of the curriculum.
- Conduct a formal investigation where I&I is occurring.
- Create and implement an equitable negotiation strategy with EBDA partners.
- Continue CVSan's practice of establishing reasonable rates and fees.
- Create a proactive communications plan specifically to address rate increase concerns and engage the ratepayers through the CAC and any other opportunity to solicit community input.
- Require management and legal counsel to create detailed desk manuals and further implement existing succession plan.
- Complete a facilities plan that lays out all options related to consolidation of staff and operations and a potential HHW facility.
- Create CVSan core value statements and continue to motivate staff with career development opportunities.
- Use a collaborative process to agree on the principles and then negotiation of a new employment contract.
- Work with Alameda County Planning Department to find out plans associated with higher density living to help address housing shortages and look for outside grants and loans to see what funding might be available for new infrastructure and replacement of old. Engage with CASA staff who are developing a guide to state and federal funding for public agencies.
- Complete a seismic vulnerability assessment to identify the highest vulnerabilities associated with CVSan's infrastructure and identify the costs associated with mitigating the risks.

- Complete a treatment master plan (that includes long-term management of biosolids and addresses the need to anticipate seismic activities and sea level rise) with OLSD.
- Prioritize existing known capital projects in the wastewater collection system to be completed in the next 10 years.
- Complete the current IT Strategic Plan and stay current with the evolving cybersecurity best practices for a public agency.
- Once partners are identified, complete a recycled water master plan that considers all opportunities and partners.
- Complete a comprehensive energy master plan.
- Invest time in researching new technology.

ELEMENT 2 - ORGANIZATION

SWRCB WDR:

The SSMP must identify:

a) The name of the responsible or authorized representative as described in Section J of this Order (SSS WDR).

b) The names and telephone numbers for management, administrative, and maintenance positions responsible for implementing specific measures in the SSMP program. The SSMP must identify lines of authority through an organization chart or similar document with a narrative explanation; and

c) The chain of communication for reporting SSOs, from receipt of a complaint or other information, including the person responsible for reporting SSOs to the State and Regional Water Board and other agencies if applicable (such as County Health Officer, County Environmental Health Agency, Regional Water Board, and/or State Office of Emergency Services (CalOES).

CVSan's wastewater collection system is managed by the General Manager (GM). The GM is responsible for directing, developing, implementing, evaluating, and administering the operations and staff required to design, construct, operate, and maintain CVSan's sewer infrastructure. The portion of CVSan's organizational chart related to management, operation, and maintenance of the wastewater collection system is shown on Figure 2.1. Contact information for positions listed both in the organizational chart and responsibility matrix shown below are included as Appendix B. The chain of communication for reporting SSOs is presented in Appendices M and N.

Figure 2.1 – SSMP Organizational Chart

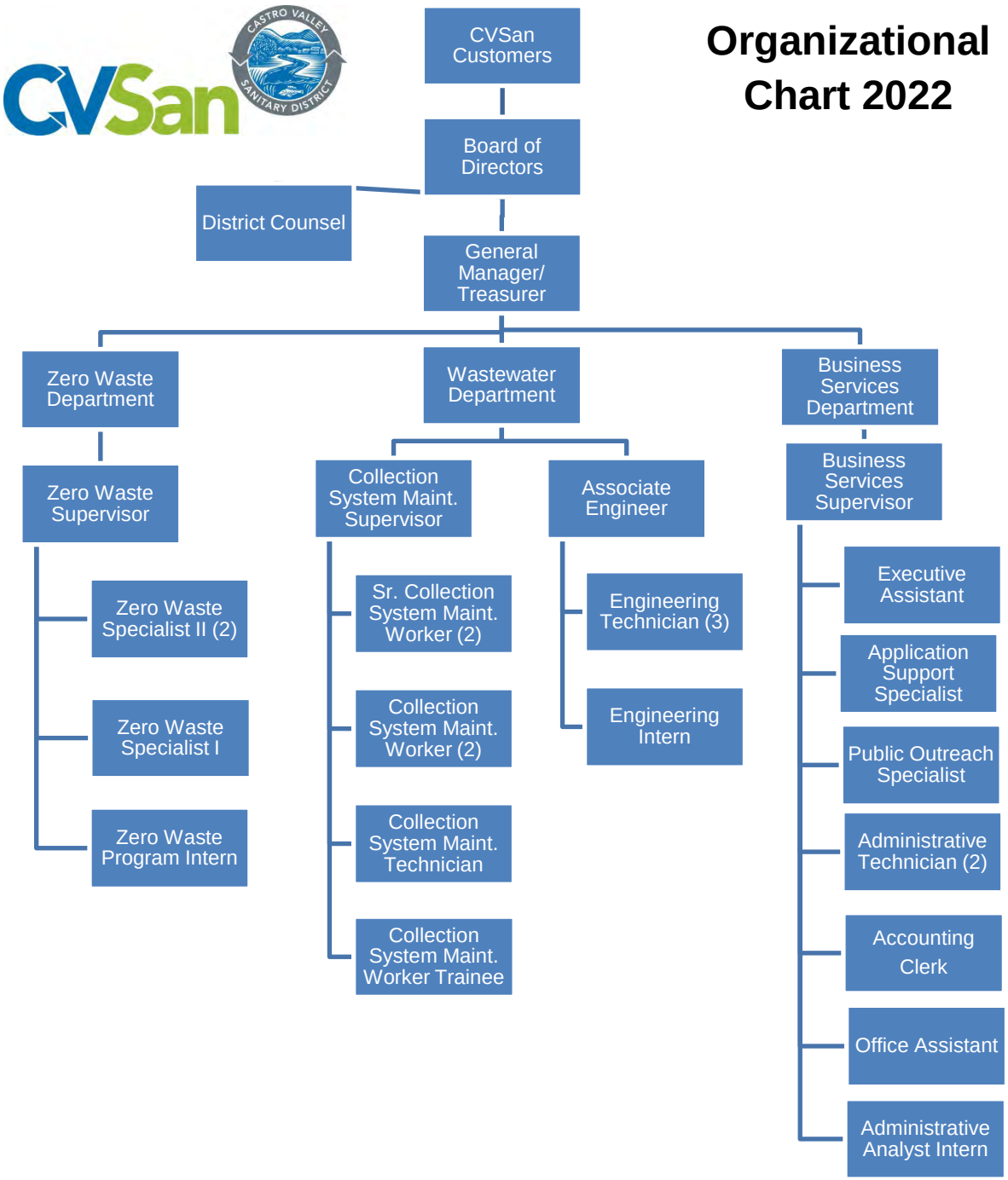

CVSan relies on the Board of Directors (Board) and select staff members to manage, operate, and maintain the Wastewater Department. The following positions are responsible for designing, implementing, managing, and updating the SSMP, as summarized in Table 2.1:

Board – Establishes policy and sets strategic goals and priorities for the agency; approves all SSMP updates and revisions.

General Manager (GM) – Serves as the Chief Executive Officer of CVSan; is accountable for: a) enforcement of all CVSan, local, state, and federal codes and regulations; b) the conduct of all financial activities; c) the oversight of all Engineering Department activities; and d) the efficient and economical performance of CVSan's operations; reviews and plans operational strategy for implementation of the SSMP; leads staff, allocates resources, delegates responsibility, and authorizes all changes, revisions, and updates to the SSMP; authorizes outside contractors to perform services necessary for implementation of all aspects of the SSMP; serves as Public Information Officer.

Serves as primary Legally Responsible Official.

Associate Engineer (AE) – Plans, organizes, administers, and directs the repair, installation, and upgrading of CVSan's wastewater collection system infrastructure; provides highly technical professional assistance to the General Manager; performs the full range of civil engineering and office work of a routine to complex nature, including development review, design, management, upgrading, and/or inspection of physical facilities; provides engineering services to CVSan staff, including field operations and maintenance personnel.

Serves as secondary Legally Responsible Official.

Engineering Technician (ET) – Provides operational support for the Engineering Department and participates in all standard construction, repair, installation, and upgrade activities of CVSan's wastewater collection system; prepares wastewater collection system planning documents and reports; documents new and rehabilitated assets; maintains CVSan's Geographical Information Systems (GIS) and mapping system; assists with coordination, development, and implementation of the SSMP.

Serves as designated Data Submitter.

Collection System Maintenance Supervisor (CSMS) – Oversees day-to-day maintenance operations and participates in CVSan activities required to install, inspect, maintain, and repair collections system facilities and equipment, including public sewer mains, and pump stations; provides system information,

maintenance reporting, and documentation to management; prepares and implements contingency plans for high risk assets; plans and implements emergency response field activity and training; documents, investigates, and reports all SSOs.

Serves as secondary Legally Responsible Official and serves as primary Data Submitter.

Collection System Maintenance Technician (CSMT) – Functions as the lead operator and implements the preventative maintenance (PM) and repair program for all CVSan fleet vehicles, wastewater pump stations, and related equipment; staffs PM activities; functions as second responder for after-hours pump station emergencies; completes SSO Field Reports, and notifies management and affected entities in the event of an SSO, as needed; prepares and submits draft SSO reports to the California Integrated Water Quality System (CIWQS) database, as needed.

Serves as designated Data Submitter.

Senior Collection System Maintenance Worker (SCSMW) – Acts as crew leader and relief CSMS, as assigned; participates in all CVSan activities required to install, inspect, maintain, and repair collections system facilities and equipment, including public sewer mains, pump stations, and mobile equipment; assists in ensuring that CVSan meets all regulatory agency requirements; staffs PM activities; functions as first responder for after-hours emergencies on a rotational basis; completes SSO Field Reports, and notifies management and affected entities in the event of an SSO; prepares and submits draft SSO reports to CIWQS database, as needed.

Serves as designated Data Submitter.

Collection System Maintenance Worker (CSMW) – Performs skilled and semi-skilled work; participates in all CVSan activities required to install, inspect, maintain, and repair collections system facilities and equipment, including sewer mains, pump stations, and mobile equipment; staffs PM activities; functions as first responder for after-hours emergencies on a rotational basis; completes SSO Field Reports, and notifies management and affected entities in the event of an SSO; prepares and submits draft SSO reports to CIWQS database, as needed.

Serves as designated Data Submitter.

Collection System Maintenance Worker Trainee (CSMWT) – Learns, assists, and participates in all CVSan activities required to install, inspect, maintain, and repair collections system facilities and equipment, including

sewer mains, pump stations, and mobile equipment; supports mobilization, response, and notification activity in event of an emergency or SSO event.

Administrative Technician (AT) – Provides clerical support for SSMP updates and revisions.

Department Head (DH) – Prepares and submits (or certifies) draft SSO reports to CIWQS database, as needed.

Serves as an alternate Legally Responsible Official

On-Call Engineering Services Provider (OCESP) – Provides input regarding SSMP updates and revisions as needed.

Table 2.1: Responsibility for SSMP Implementation		
SSMP Element	Description	Staff Responsible
Element 1 – Goals	Lead staff in the support and updating of SSMP goals	GM
Element 2 – Organization	Update organizational information; identify and update SSO responding and reporting chains of communication and other SSMP assignments	GM
Element 3 – Legal Authority	Uphold CVSan's Codes and Ordinances; draft new Ordinances as needed	GM
Element 4 – Operation and Maintenance (O&M) Program	Update wastewater collection system maps, implement O&M activities and rehabilitation/replacement program; implement staff training activities	CSMS AE
Element 5 – Design and Performance Standards	Ensure that all construction projects meet CVSan's standards; update standards; facilitate inspection of public works projects	AE
Element 6 – Spill Emergency Response Plan (SERP)	Implement and update plan; implement SERP training	CSMS
Element 7 – Fats, Oils, and Grease (FOG) Control Program	Update and implement FOG program	AE
Element 8 – System Evaluation and Capacity Assurance Plan	Regularly assess capacity requirements for the sewer collection system; incorporate recommendations in CVSan's Capital Improvement Program (CIP); implement necessary improvements	AE
Element 9 – Monitoring, Measurement, and Program Modifications	Monitoring implementation of and assess success of the overall SSMP program elements; identify trends in key performance measures and provide recommendations for improvement	AE
Element 10 – SSMP Program Audits	Oversee SSMP audits	AE
Element 11 – Communication Program	Manage communication of SSMP activities	AE

(THIS PAGE INTENTIONALLY LEFT BLANK)

ELEMENT 3 - LEGAL AUTHORITY

SWRCB WDR:

Each Enrollee must demonstrate, through sanitary sewer system use ordinances, service agreements, or other legally binding procedures, that it possesses the necessary legal authority to:

a) Prevent illicit discharges into its sanitary sewer system (examples may include infiltration and inflow (I&I), storm water, chemical dumping, unauthorized debris and cut roots, etc.);
b) Require that sewers and connections be properly designed and constructed;
c) Ensure access for maintenance, inspection, or repairs for portions of the lateral owned or maintained by the Public Agency;
d) Limit the discharge of fats, oils, and grease and other debris that may cause blockages; and
e) Enforce any violation of its sewer ordinances.

CVSan establishes its legal authority through its Code. The CVSan Code can be found online at: www.cvsan.org/cvsancode

Table 3.1: CVSan Code Articles Establishing Legal Authority

Article	Title
I	General Provisions
III	General Provisions and Specifications for the Construction of Sanitary Sewers
IV	Regulation of Sewer Services
VI	Regulation of Discharge of Waters and Wastes into the Public Sewer System

Table 3.2: Legal Authority Checklist	
Requirement	CVSan Code Section
a. Ability to prevent illicit discharges into the wastewater collection system	3101, 3102, 3806, 4111, 4112, 4126
b. Ability to require that sewers and connections be properly designed and constructed	3102, 3104, 3110
c. Ability to provide access for maintenance, inspection, or repairs for sewers or manholes in private property	3104, 4137, 4503.b.1.A-F
d. Ability to limit the discharge of FOG and other debris that may cause blockages	6215, 6216
e. Ability to enforce any violation of CVSan's sewer Ordinances	1200, 3108, 4406, 4408, 6600, 6601

ELEMENT 4 - OPERATION AND MAINTENANCE PROGRAM

SWRCB WDR:

The SSMP must include those elements listed below that are appropriate and applicable to the Enrollee's system:

a. Maintain an up-to-date map of the sanitary sewer system, showing all gravity line segments and manholes, pumping facilities, pressure pipes and valves, and applicable storm water conveyance facilities;

   Describe routine preventive operation and maintenance activities by staff and contractors; including a system for scheduling regular maintenance and cleaning of the sanitary sewer system with more frequent cleaning and maintenance targeted at known problem areas. The Preventative Maintenance (PM) program should have a system to document scheduled and conducted activities, such as work orders;

b. Develop rehabilitation and replacement plan to identify and prioritize system deficiencies and implement short-term and long-term rehabilitation actions to address each deficiency. The program should include regular visual and CCTV inspections of manholes and sewer pipes, and a system for ranking the condition of sewer pipes and scheduling rehabilitation. Rehabilitation and replacement should focus on sewer pipes that are at risk of collapse or prone to more frequent blockages due to pipe defects. Finally, the rehabilitation and replacement plan should include a capital improvement plan that addresses proper management and protection of the infrastructure assets. The plan shall include a time schedule for implementing the short and long term plans plus a schedule for developing the funds needed for the capital improvement plan;

c. Provide training on a regular basis for staff in sanitary sewer system operations, maintenance, and require contractors to be appropriately trained; and

d. Provide equipment and replacement part inventories, including identification of critical replacement parts.

4.1 Mapping

The CVSan GIS database contains information and data of the wastewater collection system. The geographic data is also linked to the asset management system data contained in CVSan's Computerized Maintenance Management System (CMMS), Lucity™. The asset information available online includes:

- Manholes – structure identification number; location referenced by adjacent address; depth; date built; rim and invert elevations; size; construction material; any pertinent structure notes.
- Pipes – pipe identification number; location referenced by street and/or adjacent address; size; material type; length; flow direction; work orders and PM schedules; relevant construction information.
- Pump Stations – identification number; location by address.

The CVSan map book, included in this SSMP as Appendix C, is generated through GIS. The GIS wastewater collection system asset inventory, which is the tabular collection of data stored in the collection system GIS, is included in Appendix D.

All map book users can provide input for updates and corrections. Field-verified user-input is submitted to the CSMS. Once reviewed, updates to GIS and Lucity™ are facilitated by the Engineering Department. New map books are produced at most, or as needed, every six months. Updates may be made at less frequent intervals if no significant updates to the system have occurred.

CVSan has also begun to implement the use of a mobile web map using the Lucity™ web application. This allows for the CVSan maps to be accessed remotely using the internet and tablets.

4.2 Resources and Budget

CVSan develops and adopts an annual Operation Expenses, Renewal & Replacement, and CIP Budget (Budget) to guide its ongoing operations and capital expenses**.** The Budget is included as Appendix E. The Budget is established on a "pay-as-you-go" basis. Rates are assessed to rate payers through the Alameda County property tax rolls as a method of collection (some public entity billings are also directly generated and billed by CVSan). All accounting policies are in conformity with the Governmental Accounting Standards Board (GASB) and all cash and cash equivalents are deposited primarily with the State of California Local Agency Investment Fund (LAIF).

4.3 Preventative Maintenance (PM)

PM is comprised of scheduled maintenance activities performed to keep public sewer mains operating properly and to prevent service stoppages. CVSan performs four basic PM procedures: hydro flushing, hydro root sawing, machine rodding, and chemical root treatment (CRT). PM procedures for root control consist of hydro root sawing, machine rodding, and CRT. These root control PM procedures account for 60 percent of the total PM program. Hydro flushing procedures are for grease control and account for 40 percent of the total PM. Pipes are added to the PM program based primarily on CCTV inspection results. In order to minimize and prevent sewer backups, the CSMD monitors known “hot spots” as to their status and condition. These PM procedures and their frequencies are summarized in Table 4.1.

Table 4.1: Preventative Maintenance Frequency Table

Frequency	Hydro Flushing	Grease Removal	Root Removal	CRT	CCTV
As needed	In response to complaint or CSMD staff request	At inspection CSMD staff request	At CSMD staff request		In response to service complaint or CSMD request
3 Months	Post-SSO due to FOG	Post-SSO due to FOG or if 6-month cycle failed	Post-SSO due to roots		
6 Months	If identified as FOG (by CCTV where 12-month cycle failed)	If identified as FOG hot spot (after 12-month cycle failed) or pipe greater than 10”	When moderate to severe root intrusion is identified (after 12-month cycle failed)		Quality Assurance/Quality Control (QA/QC) of 10 percent sample of high-frequency maintenance
12 Months	If identified as FOG (by CCTV)	If identified as FOG hot spot by CCTV or pipe greater than 10”	When moderate to severe root intrusion is identified by CCTV in diameters larger than 10”		
36 Months				If moderate to severe roots have been found	

				in more than 50 percent of the pipe joints	
60 Months	Routine cleaning of Basins				Routine Video Inspection of Basins

CVSan's forcemain O&M program consists of periodic inspections and corrective maintenance activities conducted by CVSan staff. Flow inspections are made periodically from the manholes located at the intersection of the forcemain and the gravity sewer mains. The location of the manhole permits access for upstream cleaning of the forcemains.

CVSan's CSMD is responsible for CVSan's eight pump stations. CVSan has developed an inspection and maintenance plan for the pump stations, which includes bi-weekly, quarterly and annual activities for each pump station. Pump station inspection and maintenance records are completed and tracked electronically in the field utilizing Lucity™ mobile to upload all information directly into the CMMS database. Backup generators for the pump stations are tested monthly.

Reactive maintenance activities in the wastewater collection system include investigation and response to any complaints regarding an overflow, missing or shifted manhole covers, residential plumbing problems, pump station malfunction, sewer odor, etc. Sewer complaints, when received, are investigated and appropriate action is taken to resolve the source of the problem.

Information concerning the collection system O&M is contained primarily in CVSan's Lucity™ database. Information used for the O&M assessment includes PM activities, stoppage histories, and known problem public sewer mains because of FOG. The Lucity™ database includes stoppage information from as early as 1963; however, more recent data from 2000 through 2022 is also used for assessment. The current list of SSO's and a map of historical SSO locations is provided in Appendix F.

4.4 Scheduled Inspections and Condition Assessment

Visual inspections are performed daily by CSMD staff through visual observation of facilities as part of PM cleaning activities.

Gravity sewer condition assessment is performed by CCTV inspection by CSMD staff. CCTV inspection information is integrated into CVSan's Gravity Sewer Asset

Management Plan and will be integrated into the Lucity™ database in early 2023. Any defects or severely defective pipe segments that the CSMD staff believes may require immediate attention are forwarded on to the Engineering Department using a completed defect form and the defect(s) is marked in the inspection video log. The process used by CVSan to prioritize repairs and replacements is described in detail in the Gravity Sewer Asset Management Plan, included as Appendix G.

Pump station condition assessment is performed by CVSan's CSMT. The inspections are to identify the likelihood of failure for each pump station and risk associated with each pump station if a failure is to occur. A review of all eight CVSan pump stations is described in detail in the Pump Station Asset Management Plan, included as Appendix H.

The wastewater collection system flow is monitored at the system's outfall flume flow metering structure and recorded every 10 minutes for any sign of aberration. Flow chart and recorded flow are compared monthly.

Biweekly, Quarterly and Annual PM checks are made of all pump stations while weekly safety inspections are performed on all vehicles to identify any wear items. A new vehicle replacement plan has been implemented to calculate optimal replacement cycles of all vehicles and heavy equipment. Such items are tracked electronically using tablets to complete all work order and inspection forms. through. A sample of the pump station maintenance log and work order is included as Appendix I.

The CIP was developed to mitigate hydraulic and structural deficiencies. The hydraulic CIP is located in CVSan's Wastewater Collection System Master Plan Update, which is located in Appendix P.

4.5 Training

All CSMD staff are required by CVSan to be certified by the California Water Environment Association (CWEA). All CSMD and Engineering Department staff participate in biweekly tailgate safety meetings as well as ongoing "on-the-job" training efforts to keep certifications current. Training of CVSan staff on standard procedures and other special programs are conducted on an ongoing basis. CSMD and Engineering Department staff also participate in CWEA programs and other training courses. CVSan pays for all expenses for seminars, conferences, and certifications that are job related. CVSan also provides education assistance for its employees. CVSan guidelines are in the seminars and conferences section of CVSan's Policies and Procedures Manual.

CVSan's training schedule is included in Appendix K. The training schedule was updated as part of this SSMP to include preventative and emergency procedures, overflow emergency response, CCTV and other types of inspection activities,

record keeping, and health and safety procedures. Additional information regarding SSO emergency response training can be found in Element 6.

4.6 Equipment and Parts Inventory

CVSan's equipment and vehicle list is included in Appendix L[1]. CSMD staff is provided with modern equipment including two Vac-Con combination trucks, a rodding truck, a CCTV van, three pickup trucks, and a flatbed mounted jetting truck. CVSan maintains an emergency trailer with a Honda 4,000 watt generator with a wheel kit, 80 feet of suction hose, one Godwin non-priming diesel-powered 460 gallons per minute bypass pump, confined space entry equipment, plugs, and various other equipment and items that are used in response to SSOs and other emergency situations.

This allows staff to respond quickly to SSOs including pumping an SSO from storm drains and ditches if the need arises. An inventory of clay pipe, fittings, and couplings, in sufficient quantity to make emergency repairs, is to be ordered and maintained by CVSan by December 2023. Contractors are used to make routine repairs, emergency repairs, and line replacements, and CVSan can establish agreements with contractors for these services if the need arises. CVSan does provide on-call personnel who are available 24 hours a day, seven days a week.

4.7 Outreach to Plumbers and Building Contractors

The purpose of the outreach program is to educate commercial entities involved in sewer construction or maintenance about the proper practices for preventing blockages in private sewer laterals.

CVSan holds an Annual Contractors Meeting inviting local plumbers and contractors for an informational session on working within CVSan's jurisdiction. CVSan staff explains recent updates to the construction and repair standards outlined in the CVSan Code, permit requirements, inspection schedule, and upcoming Capital Improvement Projects. The contractors are informed on the importance of keeping the public sewer mains free of construction debris when performing repairs to private sewer laterals or working around the public sewer mains.

CVSan continues to enhance its current outreach methods to educate the community about the policies and practices for preventing blockages.

4.8 Outreach to Residents

---

[1] *Appendix L – Equipment Inventory* is currently under development by CVSan and is scheduled for completion by December 2020.

CVSan promotes the proper maintenance of private sewer laterals by the use of advertisements in the Castro Valley Forum and on CVSan's website. The Mini Spec is free to the public including contractors and residents who obtain permits for private sewer lateral repairs or replacements.

CVSan's outreach includes quarterly newsletters to every property owner in its service area. These articles are ongoing and promote information about how to locate private sewer laterals, the benefits of keeping the private sewer lateral clean, and installing a backflow prevention system. CVSan has a "Call Us First" program for observed sewer emergencies.

ELEMENT 5 - DESIGN AND PERFORMANCE STANDARDS

SWRCB WDR:

Design and Performance Provisions:

a. Design and construction standards and specifications for the installation of new sanitary sewer systems, pump stations and other appurtenances; and for the rehabilitation and repair of existing sanitary sewer systems; and

b. Procedures and standards for inspecting and testing the installation of new sewers, pumps, and other appurtenances and for rehabilitation and repair projects.

5.1 General

CVSan, through its Engineering Department, provides and maintains a set of wastewater collection system design standards (General Provisions and Specifications for the Construction of Sanitary Sewers). These Standard Specifications are a complete set of mandatory standards that dictate how wastewater collection systems must be built within CVSan's jurisdiction. They are required by CVSan's Code, Article 3, for the building of new sewers and the rehabilitation and replacement of existing facilities. Strict adherence to the Standard Specifications is required to ensure the integrity of the wastewater collection system and prevent any SSOs. The Standard Specifications are updated periodically to include changes in technology and industry. CVSan reviews and revises its Standard Specifications every two years as necessary.

CVSan's Design and Construction Standards include design standards for the following:

- Connecting to an existing public sewer main;
- Pipe materials and alignment;
- Manholes and cleanouts;
- Access;
- Slopes and pipe depths;
- Clearance from other utilities;
- Required fittings; and
- Other design criteria.

CVSan's wastewater collection system construction standard specifications include construction standards for the following:

- Public sewer main materials;
- Excavation and backfill;
- Manhole and public sewer main installation;
- Trench backfill up to 12 inches above pipe;
- Public sewer line testing;
- Public sewer structures; and
- Private sewer laterals.

Standard drawings for sewer details are included in CVSan's Design and Construction Standards. These requirements provide reasonable assurance that sewers constructed to these specifications and standards will perform adequately with minimal I&I or maintenance problems and will maintain their structural integrity for the duration of their intended useful lives.

5.2 Design and Construction Standards for Public and Private Pump Stations and Other Appurtenances

Pump station plans and specifications are included in Article III, The General Provisions and Specifications for the Construction of Sanitary Sewers, Section 3905. Design standards and construction specifications for pump stations have historically been developed on a case-by-case basis as needed for construction of specific pump station facilities or for improvements to existing pump station facilities. Private pump stations require individual study and approval by CVSan prior to installation. General requirements, as well as design requirements for private pump stations are included in Chapter 5 of Article III, The General Provisions and Specifications for the Construction of Sanitary Sewers.

5.3 Standards for Inspection and Testing of New and Rehabilitated Facilities

Rehabilitation and repair of existing public sewer mains are not currently included in the standards. Design standards and construction specifications for rehabilitation and repair of existing wastewater collection systems have historically been developed on a case-by-case basis as needed for a specific project.

Specifications for rehabilitation and repair of existing wastewater collection systems will be developed as needed on a project-specific basis for any new rehabilitation projects being implemented.

Any new public sewer main construction and repairs are to be inspected and tested by a CVSan ET. The ET will ensure that construction and testing meet all CVSan Standard Specifications and applicable CVSan Codes that are created on a case-by-case basis. Permits are required for all repair and construction of private sewer laterals in CVSan. New wastewater additions, connections, or repairs will not be accepted without meeting the CVSan Standard Specifications, including but not limited to Article III, General Provisions and Specifications for the Construction of Sanitary Sewers, of the CVSan Code.

5.4 Engineering Department and Collection System Maintenance Department Collaboration

Before every sewer line repair or rehabilitation project, as well as before any other improvement project that involves our sewer system assets, both departments meet to discuss the defects and improvements needed and will go over the preliminary project scope. As the project progresses through design, the Engineering Department will schedule meetings periodically at various levels of design progress to receive input and review comments from the CSM Department.

(THIS PAGE INTENTIONALLY LEFT BLANK)

ELEMENT 6 - SPILL EMERGENCY RESPONSE PLAN

SWRCB WDR:

Each Enrollee shall develop and implement a spill emergency response plan to ensure prompt detection and response to spills to reduce spill volumes and collect information for prevention of future spills to protect public health and the environment. At a minimum, this plan must include procedures to:

a. Proper notification procedures so that the primary responders, appropriate local officials, and appropriate regulatory agencies are informed of all SSOs in a timely manner;

b. A program to remove sewage from the drainage conveyance system and ensure appropriate response to all overflows;

c. Procedures to ensure prompt notification to appropriate regulatory agencies and other potentially affected entities (e.g. health agencies, regional water boards, water suppliers, etc.) of all SSOs that potentially affect public health or reach the waters of the State in accordance with the monitoring and reporting program (MRP). All SSOs shall be documented and reported in accordance with this MRP, the California Water Code, other State Law, and other applicable Regional Water Quality Control Board (RWQCB) WDR or National Pollutant Discharge Elimination System (NPDES) permit requirements. The SSMP should identify the officials who will receive immediate notification;

d. Procedures to ensure that appropriate staff and contractor personnel are aware of and follow the Spill Emergency Response Plan and are appropriately trained;

e. Procedures to address emergency operations, such as traffic and crowd control and other necessary response activities;

f. A program to ensure that all reasonable steps are taken to contain and prevent the discharge of untreated and partially treated wastewater to waters of the United States or any drainage conveyance system and to minimize or correct any adverse impact on the environment resulting from the SSOs, including such accelerated or additional monitoring as may be necessary to determine the nature and impact of the discharge.

g. Procedures to implement technologies, practices, equipment, and interagency coordination to expedite spill containment and recovery;

h. Procedures to implement pre-planned coordination and collaboration with storm drain agencies and other utility agencies/departments prior, during, and after a spill event;

i. Procedures to conduct post-spill assessments of spill response activities; and

j. Procedures to, annually, review and assess the effectiveness of the Spill Emergency Response Plan, and update the Plan as needed.

6.1 General

This plan addresses the requirements by the State Water Resources Control Board (SWRCB), CIWQS, Local Health Officer, Director of Environmental Health, RWQCB, and the Environmental Protection Agency (EPA) that requires discharges of wastewater that enter into a drainage channel or a surface water be reported.

CVSan's goals with respect to responding to SSOs are:

- Respond quickly to minimize the volume of the SSO;
- Eliminate the cause of the SSO;
- Contain the spilled wastewater to the extent feasible;
- Minimize public contact with the spilled wastewater;
- Mitigate the impact of the SSO; and
- Meet the regulatory reporting requirements.

6.2 SSO Detection

The processes that are employed to notify CVSan of the occurrence of an SSO include: observation by the public, receipt of alarm, or observation by CVSan staff during the normal course of their work.

A. Public Observation

Public observation is the most common way that CVSan is notified of blockages and spills, and CVSan maintains an ongoing "Call Us First" public outreach campaign to encourage the public to report potential overflows and blockages as soon as possible. Contact information for reporting SSOs and backups are in the phone book and on CVSan's website: www.cvsan.org. CVSan's website directs residents to call CVSan's Main Number at (510) 537-0757 to report sewer concerns. For after hours concerns, (weekdays between 4:00 p.m. to

7:00 a.m. and weekends), CVSan's website directs residents to call the on-call phone at (510) 506-5821.

Normal Work Hours

CVSan's regular working hours are 7:00 a.m. to 4:00 p.m., Monday through Friday, with the exception of holidays. When a report of a sewer spill or backup is made during those hours, a CVSan staff member receives the call, takes the information from the caller, then communicates the information to any member of the CSMD, who will respond to the site. If the receiving CSMD personnel is unavailable to respond, the call will be dispatched to any available CSMD personnel.

After Hours

After-hours calls are handled on a rotational basis by the CSMD On-Call personnel. The on-call CSMD personnel receives the after-hours call directly from the ON-CALL phone. He then responds to the site and, if necessary, calls the CSMS for notification and additional CSMD personnel for assistance. The on-call phone number is (510) 506-5821.

B. Receipt of Alarm

CVSan's pump stations have alarm systems with an autodialer that automatically notifies the on-call phone at (510) 506-5821 if an alarm is triggered. If there is no response the autodialer will call the next number on the on-call list until the call is answered in the following order: CSMS, GM, and AE.

C. CVSan Staff Observation

CVSan personnel conduct periodic inspections of the wastewater collection system facilities as part of their routine activities. Any problems noted with the wastewater collection system facilities are reported to appropriate CVSan personnel who respond to emergency situations. Work orders are issued to correct non-emergency conditions (non SSOs).

6.3 SSO Field Response Procedures

Sewer service calls and pump station alarms are considered high priority events that demand a prompt response to the location of the problem. The response procedure flow chart for field personnel is included as Figure 6.1.

A. First Responder

The first responder is defined as the CVSan CSMD personnel who are initially notified of a possible SSO and who arrive first at the reported location of the possible SSO. The first responders' priorities are to:

- Follow safe work practices;
- Respond promptly with the appropriate equipment;
- Contain the spill wherever feasible;
- Restore the flow as soon as practicable;
- Minimize public access to and/or contact with the spilled sewage;
- Promptly notify management in the event of any SSO;
- Return the spilled sewage to the wastewater collection system; and
- Restore the area to its original condition (or as close as possible).

The first responder is responsible for contacting Management directly in the event of any SSO. If a voicemail message is left, Management is responsible for contacting the first responder directly for follow-up.

Collection System Maintenance Supervisor	(510) 299-0289
General Manager	(510) 506-3767

The first responder is also responsible for contacting any of the other CVSan Department Heads in the event that both the CSMS and GM are unavailable and an SSO report(s) needs to be submitted and/or certified.

B. Safety During Response

The first responder is responsible for following safety procedures on all jobs. Special safety precautions must be observed when performing sewer work.

There may be times when CVSan personnel responding to a wastewater collection system event are not familiar with potential safety hazards peculiar to sewer work. In such cases, it is appropriate to take the time to discuss safety issues, consider the order of work, and check safety equipment before starting the job.

The first responder must assess the scene for hazards to the responder and/or the public:

- Utilize control devices such as signs, cones, delineators, lights, and barricades when your work encroaches in lane(s) of traffic, or in an area subject to pedestrian or vehicle traffic.
- Utilize Personal Protection Equipment such as gloves, hardhat, safety glasses, safety vest, or splash goggles as needed, in compliance with CVSan's safe work practices.

- Protect your back: Utilize proper lifting, pulling, and bending techniques when removing a sanitary sewer access cover.

C. Field Activities

The first responder must respond to the reported location or pump station site and visually check for potential SSOs. All wastewater collection system calls require a response, either by diagnosing the problem over the phone to determine if an on-site response is necessary, or by responding to the reported location of the event along with electronic and photo documentation of the incident. See Appendix M for field reporting and documentation requirements.

- The first responder should make contact with the Property Owner/Occupant and determine if the stoppage is in CVSan's main sewer line.
- The first responder should call for assistance and relieve the stoppage immediately by user of sewer cleaning equipment. If additional help is needed, the CSMS or CSMW will contact other employees, contractors, and/or equipment suppliers.
- If there is an SSO and a structure or personal property has been affected, the first responder should advise the CSMS or GM of the incident immediately.
- The first responder should take necessary photographs of the affected area for CVSan records.
- Under no circumstances should the first responder volunteer or disown CVSan liability. Instead, neutral comments should be used by CVSan staff indicating that the liability issue cannot be addressed until all of the relevant information has been evaluated.
- If there is damage to real estate and/or personal property, the first responder, CSMS, or GM will advise the property owner/occupant of the procedure for filing a claim for damages.

If overflow is **inside** a structure:

- The CSMS or GM may call a spill mitigation service to provide clean-up services.
- The first responder should contain the area. This may be done by any means acceptable to CVSan.

- The first responder may remove water/debris and sanitize with disinfectant per accepted CVSan means and materials. The first responder is responsible for disposing of water/debris properly.

If overflow is outside of structure:

- If the overflow is on the ground, the first responder should remove debris by means of rake and shovel or other methods.
- The first responder should, if possible, wash down and disinfect the area. The first responder is responsible for disposing of water/debris properly.
- After the first responder has performed outside cleanup and if the area is still not cleaned, the first responder may receive authorization from the CSMS or GM to call a spill mitigation company.

In all circumstances, prior to leaving the area, the first responder is responsible for making certain that CVSan's main sewer and affected building sewer, provided that cleanout and backflows meet CVSan's standards, are both functioning properly.

The CSMS or GM is to determine if the overflow warrants third-party investigation. Once the determination is made, they are to contact a pre-qualified or pre-designated local cleaning company. The cleaning company shall use the cleaning and restoration certification standard and reference guide for professional water damage restoration S500-94.

The CSMS can authorize an initial expenditure of $2,500 for cleaning and restoration services.

The CSMS or first responder is responsible for tracking and logging damaged personal items. Overflows may result in personal items that either need to be cleaned or replaced. The homeowner's damaged items to be cleaned or replaced are to be documented on the affected property log form. Photos shall be taken of the logged items. The property owner is to sign the log form, acknowledging and agreeing with the inventory list. This information will be provided to Alliant Insurance Services, Inc. as part of the overall claims process.

The first responder is responsible for completing the proper work sheet and overflow reporting, noting all pertinent details.

D. Specific Procedures for Spill Containment and Recovery

The first responder should engage in any of the following specific procedures to contain the spill and recover any overflowed wastewater:

- Install air plugs in storm drains, when appropriate, to contain the spill.

- Divert the spill by building small berms to change direction of the flow back to the sewer.
- Divert the spill by pumping around overflow and return to the sewer.
- Contain the spill by letting it collect in a naturally low area and recover the wastewater when time permits.
- Dam/Sand bag the spill by building dirt berms to collect the spill.

The first responder should engage in any of the following specific procedures to clean up and disinfect the area of the spill:

- Flush the area with tertiary water. The amount of flush water should be at least three times that of the spill. If chlorinated water is used for flushing, dichlorination tablets shall be used in accordance to the manufacturers specifications based on the amount of water used. Disinfectants should **not** be used due to their toxicity to fish and wildlife unless they are non-toxic.
- Post the "Contaminated Water" signs and block the contaminated areas with yellow caution tape and barricades. Do not remove these until the results of any lab tests are cleared by the Alameda County Department of Environmental Health.

E. Documentation of Spill

The first responder is responsible for engaging in the following measures to correctly document the spill and the circumstances surrounding it.

- Providing accurate flow measurements and duration of spill. If the flow is coming from a cleanout or a broken line, count the number of upstream connections and estimate the time that the flow has been occurring.
- If the flow is coming from a manhole, use established volume estimation method as identified o SSO Field Response Form.
- If the flow is coming from a pump station, use the previous day's (same weather) flow and pump capacity to estimate the flow.
- Providing a map of the problem location [manhole(s) involved] and where the spill discharged (e.g., storm drain, field, stream).
- Taking photos of events and the scene.
- Filling out the proper Sanitary Sewer Overflow Report (See CVSan Policy No. 3130 – Spill Response Plan, Appendix X, X2, and all work orders associated with spill). Submit report to CSMS or GM, as soon as

possible, but no later than the end of the business day or first thing the next business day, for placement in the Spill Report binder.

As soon as possible after major SSO events, all of the participants, from the person who received the call to the last person to leave the site, should meet to review the procedures used and to discuss what worked and where improvements could be made in responding to and mitigating future SSO events. The results of the debriefing should be recorded and tracked to ensure the action items are completed.

Figure 6.1 – SSO Response Procedure Flow Chart

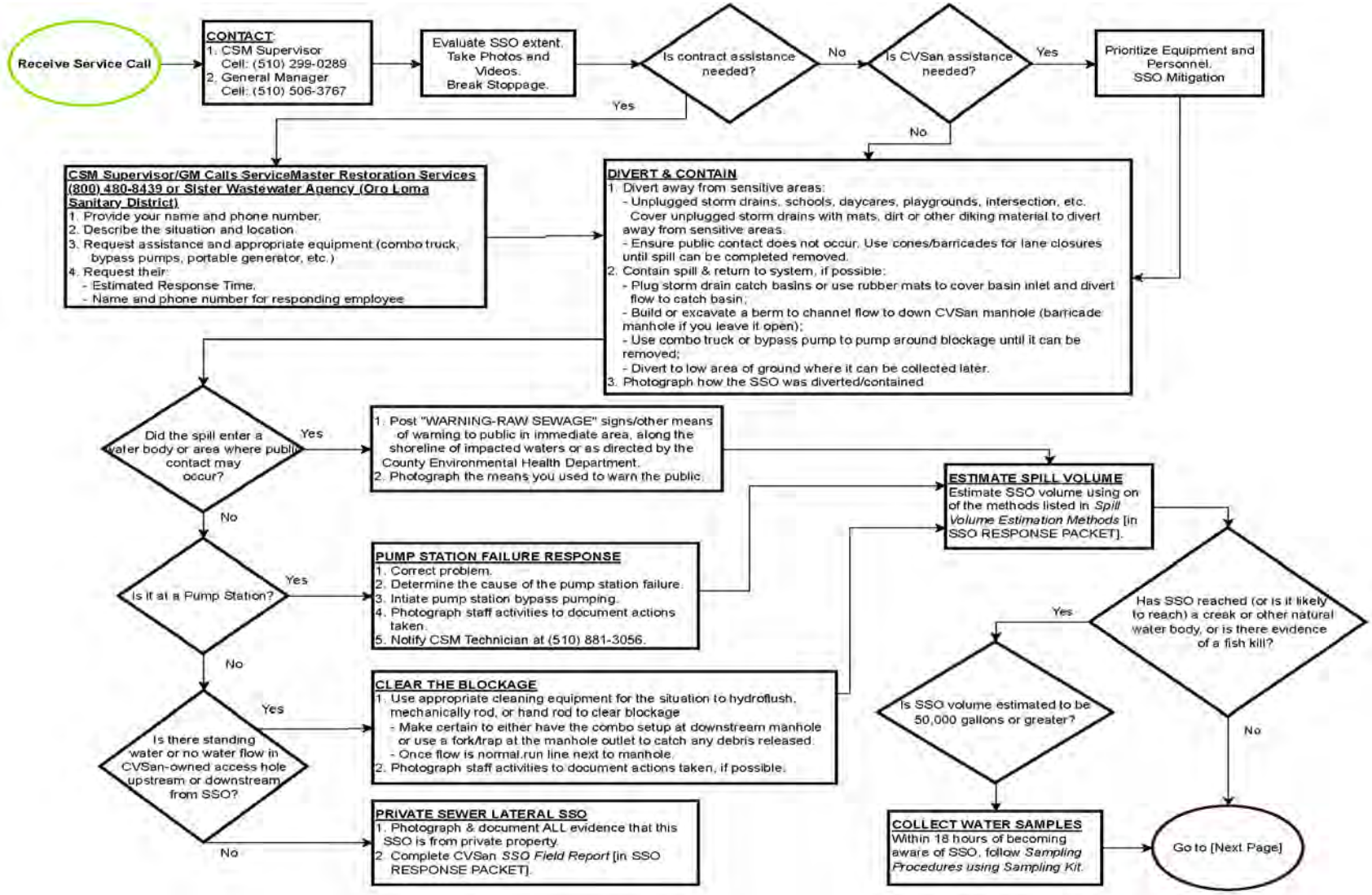

Figure 6.1 – SSO Response Procedure Flow Chart (continued)

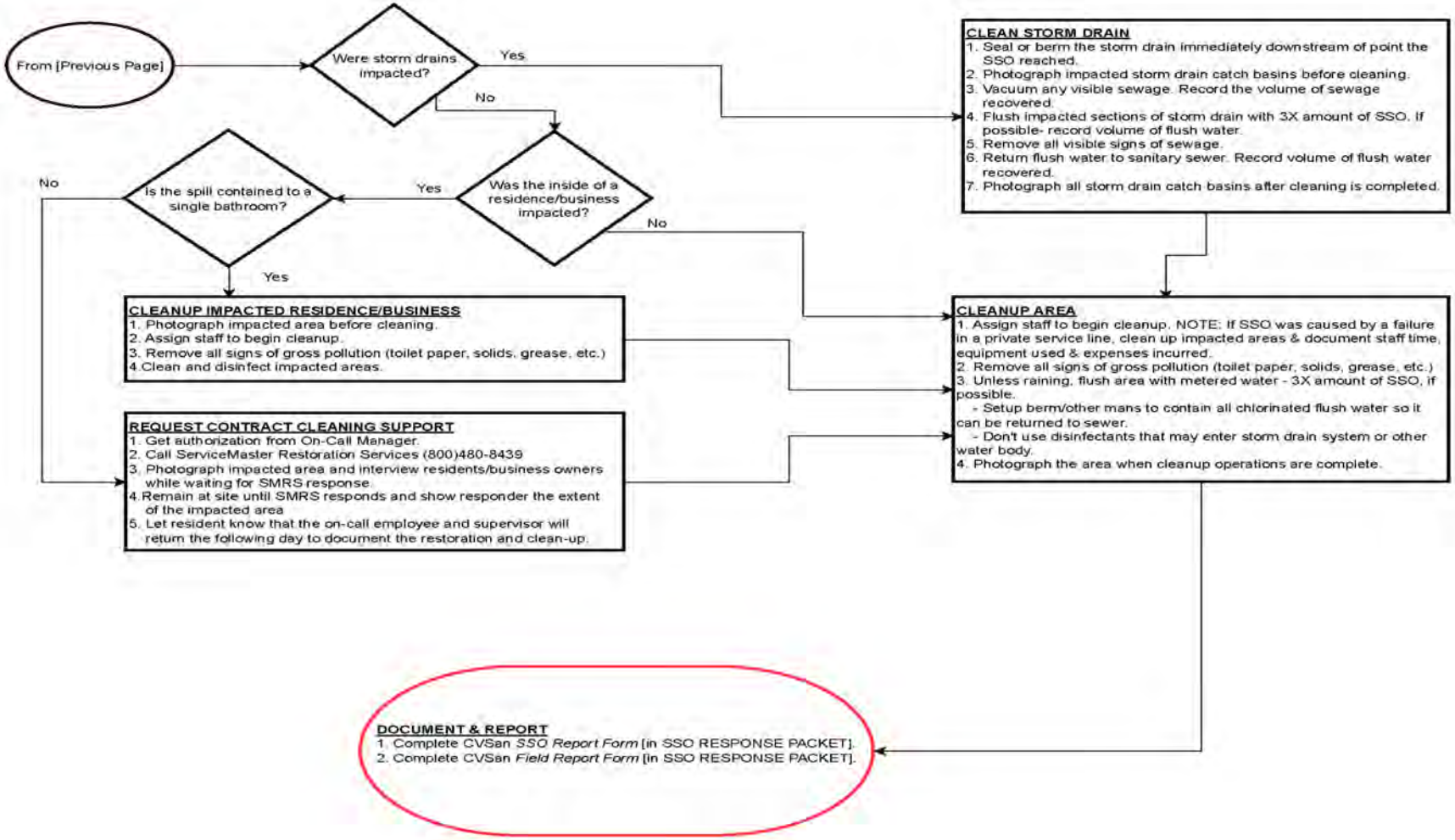

6.4 SSO Reporting Procedures

The internal and external reporting process for SSO events that are intended to meet the SWRCB requirements are summarized in the flow chart included as Figure 6.2 below**.**

Figure 6.2 – SSO Reporting Flow Chart

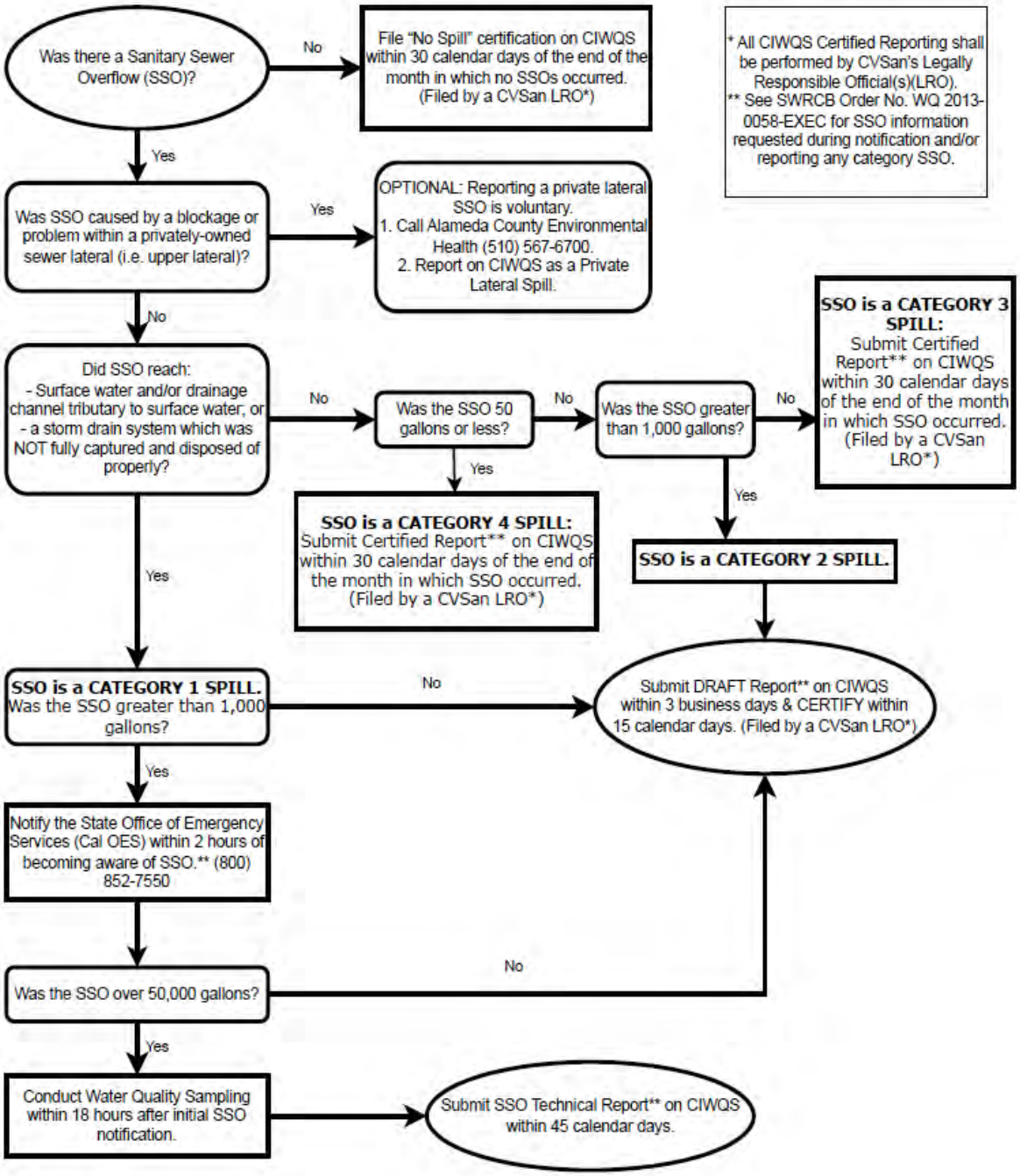

In addition to the procedures outlined in Appendices M and N, notice shall also be given to the following local agencies, individuals, and/or entities as the situation dictates:

Table 6.1: SSO Additional Contacts	
Agency/Contact	Phone Number/Contact
CalOES	(800) 852-7550
SWRCB	http://ciwqs.waterboards.ca.gov/
Alameda County Public Works Agency Business Hours (8:30 a.m. – 5:00 p.m.) After Hours (and weekends) Construction Program Manager	 (510) 670-5500 911 (510) 670-6694
Alameda County Environmental Health	(510) 567-6700
Law Enforcement (traffic control, road closure) CHP – Castro Valley Office Alameda County Sheriff's Dept. (ALSD) Alameda County Fire Department (ALFD)	 (510) 581-9028 (510) 667-7721 (925) 833-3473
Utilities (not an exhaustive list) EBMUD PG&E AT&T	 24 HR Hotline: (866) 403-2683 24 HR Hotline: (888) 743-4911 Land-line repair: (800) 310-2355 or (800) 750-2355
Local/Regional Recreation Hayward Area Recreation District (HARD) East Bay Regional Park District	 (510) 881-6700 (510) 544-3233
Local Residents Impacted	TBD

6.5 Failure Analysis Investigation

Every SSO event is an opportunity to thoroughly evaluate the response and reporting procedures. Each SSO event is unique, with its own elements and challenges including volume, cause, location, terrain, and other parameters.

ELEMENT 7 - FATS, OILS, AND GREASE (FOG) CONTROL PROGRAM

SWRCB WDR:

Each Enrollee shall evaluate its service area to determine whether a FOG control program is needed. If an Enrollee determines that a FOG program is not needed, the Enrollee must provide justification for why it is not needed. If FOG is found to be a problem, the Enrollee must prepare and implement a FOG source control program to reduce the amount of these substances discharged to the sanitary sewer system. This plan shall include the following as appropriate:

a. An implementation plan and schedule for a public education outreach program that promotes proper disposal of FOG;

b. A plan and schedule for the disposal of FOG generated within the sanitary sewer system service area. This may include a list of acceptable disposal facilities and/or additional facilities needed to adequately dispose of FOG generated within a sanitary sewer system service area;

c. The legal authority to prohibit discharges to the system and identify measures to prevent SSOs and blockages caused by FOG;

d. Requirements to install grease removal devices (such as traps or interceptors) design standards for the removal devices, maintenance requirements, BMP requirements, record keeping and reporting requirements;

e. Authority to inspect grease producing facilities, enforcement authorities, and whether the Enrollee has sufficient staff to inspect and enforce the FOG ordinance;

f. An identification of sanitary sewer system sections subject to FOG blockages and establish a cleaning maintenance schedule for each section; and

g. Development and implementation of source control measures, for all sources of FOG discharged to the sanitary sewer system, for each section identified in (f) above.

CVSan has a fully implemented FOG Control Program. The purpose of the FOG Control Program is to minimize and mitigate the impact of FOG related SSOs that can occur within CVSan's jurisdiction. CVSan's FOG Control Program consists of public outreach to the residential community; outreach to and inspection of commercial FOG producers; an evaluation and maintenance plan of CVSan's jurisdiction; source control measures, and legal authority.

7.1 Public Outreach Program

One component of the FOG Control Program provides public education to the residential community raising awareness of non-commercial sources of FOG discharge. Proper handling of cooking oils and grease is described in literature distributed at public events and on the CVSan website (https://www.cvsan.org/wastewater/residential_services/fog_for_home.php).

7.2 FOG Outreach and Source Control Program

Another component of the FOG Control Program focuses on food service establishments (FSEs). FSEs are defined as any facility involved in the preparation and/or serving of food for both commercial and non-residential use (i.e. schools, hospitals, restaurants, coffee shops, convalescent homes, etc.). Those FSEs determined to be FOG producers are inspected annually by CVSan staff. The inspections include discussions with facility staff on best management practices (BMPs) during food preparation and cleaning. Also covered is the proper and regular servicing of the grease removal devices to reduce the amount of grease entering the wastewater collection system.

The materials listed below can be found on CVSan's website (https://www.cvsan.org/wastewater/business_services/fats,_oils_and_grease_control_program.php) and are also included in Appendix O:

- List of Grease Haulers for Alameda County;
- Grease Interceptor Fact Sheet – Bay Area Pollution Prevention Group; and
- FOG Control Program Maintenance Reporting Form.

7.3 Legal Authority

See "Element 3 – Legal Authority" for discussion of CVSan's legal authority relating to the FOG Control Program.

7.4 Identification of Grease Problem Areas and Sewer Cleaning

CVSan regularly identifies and assesses the wastewater collection system for potential FOG related blockage points (hot spots) and have implemented Ordinances with the purpose of enforcement. The CSMD staff perform the

necessary tasks associated with addressing FOG in the public sewer mains. Engineering Department personnel perform the enforcement tasks of inspections, FOG discharge investigations, and FOG database management.

ELEMENT 8 - SYSTEM EVALUATION AND CAPACITY ASSURANCE PLAN

SWRCB WDR:

The Enrollee shall prepare and implement a capital improvement plan (CIP) that will provide hydraulic capacity of key sanitary sewer system elements for dry weather peak flow conditions, as well as the appropriate design storm or wet weather event. At a minimum, the plan must include:

a. Evaluation: Actions needed to evaluate those portions of the sanitary sewer system that are experiencing or contributing to an SSO discharge caused by hydraulic deficiency. The evaluation must provide estimates of peak flows (including flows from SSOs that escape from the system) associated with conditions similar to those causing overflow events, estimates of the capacity of key system components, hydraulic deficiencies (including components of the system with limiting capacity) and the major sources that contribute to the peak flows associated with overflow events;

b. Design Criteria: Where design criteria do not exist or are deficient, undertake the evaluation identified in “a” above to establish appropriate design criteria;

c. Capacity Enhancement Measures: The steps needed to establish a short- and long-term CIP to address identified hydraulic deficiencies including prioritization, alternatives analysis, and schedules. The CIP may include increases in pipe size, I&I reduction programs, increases and redundancy in pumping capacity, and storage facilities. The CIP shall include an implementation schedule and shall identify sources of funding;

d. Schedule: The Enrollee shall develop a schedule of completion dates for all portions of the capital improvement program developed in (a-c) above. This schedule shall be reviewed and updated consistent with the SSMP review and update requirements as described in Section D. 14.

8.1 Capacity Assessment

CVSan assesses its capacity through three criteria: Condition Assessment, Hydraulic Assessment, and O&M Assessment.

Condition Assessment: CVSan's condition assessment is based on existing CCTV inspection information. Between 1997 and 2019, CVSan conducted CCTV inspection of approximately 144 miles of sewer, which represents 99 percent of the wastewater collection system. The CCTV inspections identified defects in approximately 65 miles of sewers. Five types of critical defects relating to severe cracks, severe and minor sags, and severe offset or open joints were found in 20 miles of sewers, and these sewers were identified for rehabilitation. Rehabilitation will be by replacement if the sewer reach has more than three critical defects or if severe or moderate sags are found. Otherwise, critical defects will be addressed by spot repairs.

Hydraulic Assessment: CVSan's hydraulic assessment is based on hydraulic modeling of 49 miles of trunk sewers, and outfall under current and future flow conditions. The hydraulic model was developed from CVSan's GIS data and survey data performed by CVSan. Flow projections are based on flow monitoring performed by CVSan and land use planning information primarily from the Castro Valley General Plan. CVSan's service area is almost built out and only minor increases in average daily flow are anticipated. Peak wet weather flows were based on a 10-year, 24-hour design storm. Flow projections are summarized in Table 8.1 (Flow measurement is gauged in million gallons daily or mgd).

Table 8.1: Flow Summary

Condition	Average Dry Weather Flow (ADWF)	Peak Wet Weather Flow (PWWF)
Current	3.23 mgd	34.69 mgd
Future	3.39 mgd	34.89 mgd

The hydraulic assessment found many public sewers mains with inadequate capacity to convey current or future wet weather flows without excessive surcharging. The assessment results closely match historical wet weather surcharging records of CVSan. Various alternatives were considered to adjust the numerous flow splits in the wastewater collection system and to consolidate CIP.

O&M Assessment: CVSan's O&M assessment is based on available information from CVSan's CMMS from 2005 through the current year. The assessment considered PM cleaning frequency and recorded stoppages. Approximately 29 percent of sewers are included in the PM program which cleans public sewer mains at intervals of three to 36 months depending on need. Any public sewer mains that had stoppages during that period were noted on the PM repair/replacement schedule. CVSan is comprised of 11 Basins that are on a rotating maintenance schedule that allows a complete cleaning cycle every five years.

8.2 System Evaluation and Capacity Assurance Plan:

The CIP was developed to mitigate hydraulic and structural deficiencies. It is included as Appendix J.

8.3 Other Recommendations:

Recommendations from the 2016 Wastewater Collection System Master Plan Update have all been reviewed and many of them have been implemented or completed since the completion of the Master Plan Update, which is included in full as Appendix P. Recommendations from the 2015 Gravity Sewer Asset Management Plan, which is included in full as Appendix G, have also been completed.

ELEMENT 9 - MONITORING, MEASUREMENT, AND PROGRAM MODIFICATIONS

SWRCB WDR:

The Enrollee shall:

a. Maintain relevant information that can be used to establish and prioritize appropriate SSMP activities;

b. Monitor the implementation and, where appropriate, measure the effectiveness of each element of the SSMP;

c. Assess the success of the preventative maintenance program;

d. Update program elements, as appropriate, based on monitoring or performance evaluations; and

e. Identify and illustrate SSO trends, including: frequency, location, and volume.

CVSan will maintain information that can be used in SSMP performance monitoring through the CIWQS database administered by the State and Regional Water Quality Control Boards to track information under the SSS WDR. All CIWQS information is available through the Public Reports portal at: http://www.waterboards.ca.gov/water_issues/programs/ciwqs/publicreports.shtml

9.1 Performance Measures

The following records shall be maintained by CVSan for a minimum of seven years and shall be made available for review by the State and Regional Water Quality Control Boards during an onsite inspection or through an information request:

- General records documenting compliance with all provisions of the SSS WDRs and this MRP.
- SSO events, including but not limited to:
  - Complaint records documenting how CVSan responded to all notifications of possible or actual SSOs, both during and after business hours, including complaints that do not result in SSOs. Each complaint record shall, at a minimum, include the following information:
    - Date, time, and method of notification.
    - Date and time the complainant or informant first noticed the SSO.
    - Narrative description of the complaint, including any information the caller can provide regarding whether or not the complainant

or informant reporting the potential SSO knows if the SSO has reached surface waters, drainage channels, or storm drains.

        - Follow-up return contact information for complainant or informant for each complaint received, if not reported anonymously.
        - Final resolution of the complaint.

    - Records documenting steps and/or remedial actions undertaken by CVSan, using all available information, to comply with section D.7 of the SSS WDRs.
    - Documentation of all volume estimations made for discharges and, if applicable, discharge recoveries.

- Records documenting all changes made to the SSMP since its last certification indicating when a subsection(s) of the SSMP was changed and/or updated and who authorized the change or update. These records shall be attached to the SSMP as Appendix R.
- Electronic monitoring records relied upon for documenting SSO events and/or estimating the SSO volume discharged, including, but not limited to records from:
    - Supervisory Control and Data Acquisition (SCADA) systems;
    - Alarm system(s); and
    - Flow monitoring device(s) or other instrument(s) used to estimate wastewater levels, flow rates and/or volumes.

The detailed schedule for calculating and evaluating the Performance Measures, as well as the current list of Collection System Management Goals, can be found in Appendix Q.

9.2 Performance Monitoring

The effectiveness and accuracy of CVSan's SSMP is due to the collaborative efforts of the Wastewater Department. The Administrative Department also provides support with the needed changes and modifications. Assessment is based on monthly performance indicators and SSO reports prepared by the CSMD, the CSMS's quarterly report to the GM, and the GM's quarterly report to the Board. The GM's report provides information to the Board concerning any data of an SSO including: spill time and remedy, physical address, spill type, cause (root intrusion, FOG, debris, pipe failure, pump station failure, capacity, or other), the amount spilled, whether the spill reached a waterway, and any action needed to be taken. The GM also provides information on planned sewer cleanings and

any repair, rehabilitation, and replacement work on CVSan's wastewater collection system. As stated in Element 6, CVSan maintains 24-hour on-call personnel (on-call personnel can be reached at 510-506-5821).

The SSMP is reviewed at least biennially by the Wastewater and Administration Departments. Data, activities, and operations are analyzed to determine the effectiveness of the SSMP elements in accomplishing the goals of the plan. Data used is obtained from CVSan's CMMS (Lucity™) previously described in Element 6. Elements of the SSMP will be modified based on the results of analysis of performance measures. If major changes are proposed for CVSan's activities or the SSMP, it may need to be approved by the Board.

CVSan staff will update critical information, such as contact numbers and the SSO response chain of communication, as needed. A comprehensive SSMP update will occur every five years as required by the SWRCB. An SSMP Update Log for tracking these updates and program changes is contained in Appendix R.

(THIS PAGE INTENTIONALLY LEFT BLANK)

ELEMENT 10 - SSMP PROGRAM AUDITS

SWRCB WDR:

As part of the SSMP, the Enrollee shall conduct periodic internal audits, appropriate to the size of the system and the number of SSOs. At a minimum, these audits must occur every two years and a report must be prepared and kept on file. This audit shall focus on evaluating the effectiveness of the SSMP and the Enrollee's compliance with the SSMP requirements identified in this subsection (D.13.), including identification of any deficiencies in the SSMP and steps to correct them.

CVSan will audit its SSMP on a biennial basis. The audit will be conducted jointly by the Administration and Wastewater departments, performed under the supervision of the GM. At a minimum, audits will occur every two years. (Section D14 of the state's Waste Discharge Requirements requires the SSMP to be updated every five years.) The audit will focus on the effectiveness of the SSMP and identify any deficiencies in the SSMP, or in current activities of CVSan, and correct them. It is CVSan's intent to maintain an effective SSMP that continues to provide a plan and a schedule to properly manage, operate, and maintain all parts of the wastewater collection system. This will help to reduce and prevent SSOs, as well as mitigate any SSOs that do occur within CVSan's jurisdiction. A copy of the Audit Report and Action Plan, which is based on the requirements in the WDR, is included in Appendix S.

From this audit, a report will be prepared and kept on file. The report will contain:

A. A review of progress made in development of SSMP elements;

B. Review of all the content within the elements and appendices;

C. Identification of successes of implementing elements and needed improvement(s);

D. Description of system improvement(s) during the past year; and

E. Description of system improvements planned for the upcoming year, with an estimated schedule for implementation.

(THIS PAGE INTENTIONALLY LEFT BLANK)

ELEMENT 11 - COMMUNICATION PROGRAM

SWRCB WDR:

The Enrollee shall communicate on a regular basis with the public on the development, implementation, and performance of its SSMP. The communication system shall provide the public the opportunity to provide input to the Enrollee as the program is developed and implemented. The Enrollee shall also create a plan of communication with systems that are tributary and/or satellite to the Enrollee's sanitary sewer system.

11.1 Communication of SSMP Development and Implementation

CVSan shall post and maintain a copy of the most current SSMP document on its website (http://www.cvsan.org/ssmp) to inform the public of the program, and any changes thereto.

In addition, any proposed changes to the SSMP document will be provided to CVSan's Community Advisory Committee (CAC) for review prior to being accepted by the CVSan Board. The CAC consists of volunteer members of the community representing CVSan's population and interests.

The SSMP update was approved by the Board on May 2, 2023. The Minute Action the Board approving the SSMP is included in Appendix T. All Board meetings are open to the public and include time for public comment. The Regular Board meeting agenda posted on the CVSan website prior to the May 2, 2023 meeting is also included in Appendix T.

11.2 Communicating Wastewater Collection System Performance

CVSan reports SSOs electronically to CIWQS. The electronic SSO data, as well as information regarding regulatory actions, is available at: http://www.waterboards.ca.gov/water_issues/programs/ciwqs/publicreports.html. CVSan provides information on the performance of the wastewater collection system, O&M, and system repair and rehabilitation performance through its Annual Report. This report is mailed to every residence and business located within CVSan's jurisdiction and is also published on the CVSan website.

11.3 Communication with Tributary Wastewater Collection Systems

CVSan is currently in the process of identifying the privately owned wastewater collection systems that can be considered tributary to its system to develop a list. If some are identified, information regarding this SSMP will be made available to each tributary user (either individually or as a collective) on an annual basis.

(THIS PAGE INTENTIONALLY LEFT BLANK)

APPENDIX A

CVSan Strategic Plan

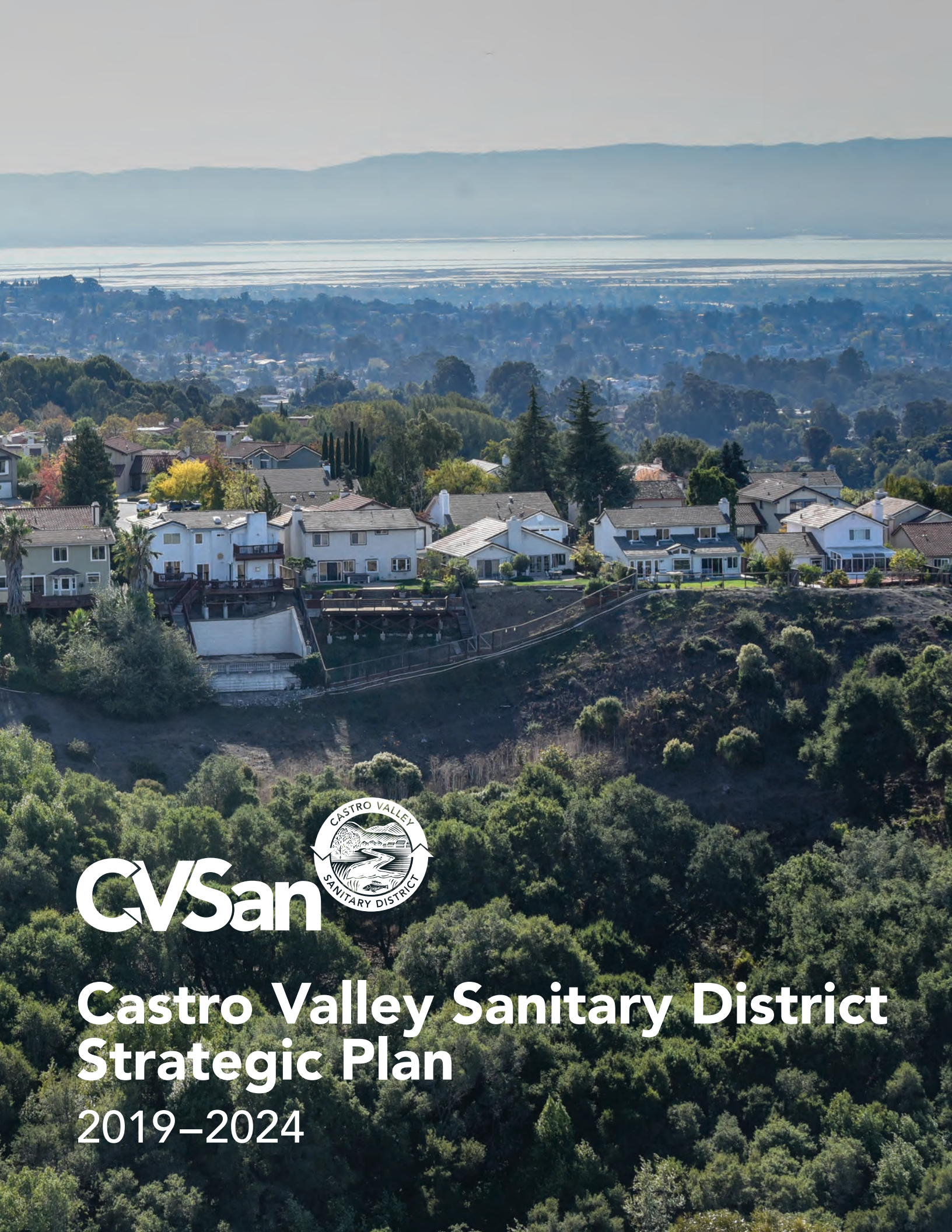

CVSan

Castro Valley Sanitary District Strategic Plan

2019–2024

Board of Directors

Daniel M. Akagi

Melody Appleton

Ralph Johnson

Timothy McGowan

Dave Sadoff

General Manager's Message

I am pleased to launch Castro Valley Sanitary District's (CVSan's) five-year Strategic Business Plan (Plan). This Plan is based on input from our Board of Directors and the Executive team. It provides a strong foundation to guide us as we strive to meet the future public health needs of our customers, protect the environment, and address the increasing regulatory standards of our industry in a cost-effective manner.

Since our last Strategic Plan was adopted in 2014, the nation's wastewater and solid waste industries have been called upon through new legislation to not only focus on the health and safety of the communities we serve and protection of the environment, but also to focus on resource recovery from wastewater flows and from the solid waste collection we do. Therefore, in this Plan you will see a newly established vision that complements our progressive efforts to achieve zero waste by 2029, and to be a leader in creating resources from wastewater such as recycled water and exploring the generation of new green energy.

Our ongoing strategic business planning goals provide a flexible framework, which inspires teamwork while allowing for individual creativity and accountability. I understand it is no small feat to make a commitment for CVSan to be a leader in our industry and am conscious of the ambitious nature of this new Strategic Business Plan. While we pursue these ambitious goals, we also embrace the need to maintain rates that are appropriate for our region.

I am very proud of the integrity, commitment, and resourcefulness of the CVSan team in serving our customers.

Roland P. Williams, Jr.
General Manager

Timeline of Major Events

1939
CVSan is established to serve the largely agricultural community of Castro Valley.

1967
The Castro Valley/Oro Loma Wastewater Treatment Plant expands to accommodate the rising population.

1974
The Castro Valley/Oro Loma Wastewater Treatment Plant begins discharging wastewater through the Outfall Pipe, a five-mile long pipe that extends out into the San Francisco Bay.

1991
CVSan residents begin recycling plastic, metal, paper, and glass curbside.

1994
CVSan residents begin diverting plant debris and yard trimmings curbside to be composted.

1997
CVSan hosts the first 3rd Grade Field Trip to teach students how to reduce, reuse, and recycle. Composting (rot) and Zero Waste are added as field trip topics later.

2002
CVSan hosts the first Recycles Day event to help residents properly recycle e-waste and tires.

2003
CVSan hosts the agency's first Earth Day Clean-Up event benefitting schools and public sites throughout Castro Valley.

2006
CVSan completes a major $32 million renovation project at the Castro Valley/Oro Loma Wastewater Treatment Plant to increase the amount of wastewater that can be treated.

2016
CVSan completes the Ecotone Horizontal Levee Project at the Castro Valley/Oro Loma Wastewater Treatment Plant to protect it from predicted rising sea levels.

2019
CVSan celebrates 80 years of service.

Strategic Plan Breakdown

Mission Statement

Castro Valley Sanitary District (CVSan) is a public agency that provides wastewater and solid waste services (recycling, organics, and garbage) to the community of Castro Valley. This includes maintaining 156 miles of sewer pipes, eight pump stations, and 90 public garbage and recycling cans on Castro Valley Boulevard. CVSan also owns 25% of the Castro Valley/Oro Loma Wastewater Treatment Plant (WWTP) and participates in the management of the WWTP's ongoing operations. Quality service and reasonable rates are standard practice at CVSan.

CVSan was founded in 1939 and serves over 61,000 residents and 580 businesses in an 8.5 square mile area.

Vision Statement

CVSan will be leaders in creating resources from wastewater and achieving zero waste.

Core Values

As evidenced by the awards given to the CVSan organization over the last strategic planning period, CVSan staff accomplished a lot of good work with a relatively small staff. CVSan leaders are committed to maintaining a learning organization. The hiring process for new employees will continue to search for people with the "right attitude" who demonstrate the potential to be a team player and to learn and grow with an exemplary organization providing valued services to our customers.

There will be an organized effort to capture and document the core values and culture of the organization during this next planning period.

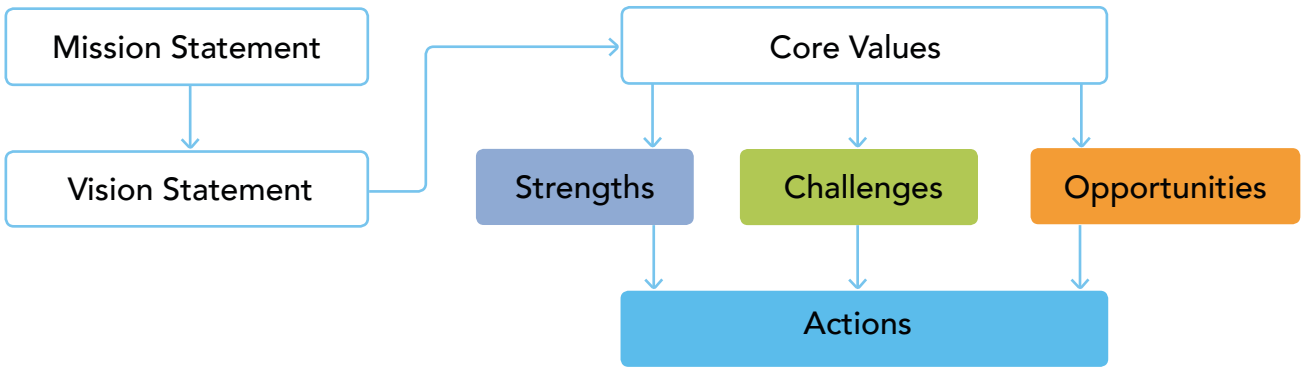

Strengths

The Board and the Executive team identified the strengths that they feel CVSan has and should be proud of. The numbers that follow the stated strength refer to a specific action that staff will focus on.

	Strengths	Action
A	CVSan has award-winning, innovative Zero Waste Programs (first to implement a food to compost program).	1
B	CVSan has award winning wastewater programs (most recently California Water Environment Association (CWEA) Collections System of the Year at the state level).	2
C	CVSan manages its finances carefully, maintains an impressive AA Bond rating, and maintains adequate reserves to minimize financial uncertainties to its ratepayers.	3
D	CVSan has high quality staff and is a well-run organization as evidenced by a greater than 80 percent approval/confidence rating from a public input survey taken in 2018.	4
E	CVSan Board of Directors operate well and have healthy Board dynamics. They encourage the formulation of strong partnerships at the local level as well as working with other organizations through the California Association of Sanitary Agencies (CASA) where the CVSan General Manager is on the Board of Directors.	5
F	CVSan has placed a high priority on maintaining its infrastructure, resulting in a low occurrence of overflows.	6
G	CVSan has made safety a core value in all its activities, resulting in a record low number of lost time accidents.	7
H	CVSan's outreach is very effective and includes communications through social media and the Castro Valley Forum, as well as educational materials on its website and in its brochures. CVSan makes special outreach efforts to connect with the community to maintain transparency through its Community Advisory Committee (CAC) as well as by conducting field trips to educate its ratepayers.	8
I	CVSan proactively implements pioneering projects ahead of regulations that require innovation. A great example is the Ecotone Slope Project being implemented to reduce nutrients in wastewater, Private Sewer Lateral Program to reduce inflow and infiltration (I&I), and Recycles Day Events to collect E-waste, household hazardous waste (HHW), and used cooking oil.	9

Challenges

The Board and Executive team described areas that they feel are challenges and need to have attention given as a part of this strategic planning effort. The numbers that follow the stated challenge refer to a specific action that staff will focus on.

	Challenges	Action
A	CVSan would like to increase visibility on the positive efforts relative to its wastewater functions.	10-12
B	CVSan would like to decrease high I&I in its wastewater collection system.	13
C	CVSan is negotiating the terms of the East Bay Dischargers Authority (EBDA) Agreement.	14
D	CVSan has kept rates within 10 percent of the median rate for Alameda County and would like to continue to do so.	15
E	CVSan is aware of the need to maintain public acceptance related to spending funds on infrastructure such as new facilities that will consolidate operations.	16
F	CVSan will continue implementing its succession planning and add focus on management level positions and legal counsel.	17
G	CVSan staffing has grown from 12 employees to 25 employees who are not centrally located.	18
H	CVSan would like to retain quality staff and minimize turnover.	19
I	CVSan needs to adapt to staff unionizing and avoid an "us versus them" mentality while maintaining its nimble processes relative to salary and conditions of employment. A new employee contract will need to go through a formal negotiation process.	20
J	CVSan's service area is near build-out which reduces income from new connection fees.	21
K	CVSan must adapt to changes in recyclables market due to China and other countries' new policies related to accepting recyclables. New sorting practices that include clear communication to CVSan's customers and monitoring/enforcement will need to be developed.	22
L	CVSan wants to continue to provide staff with development opportunities to be a high-performance organization.	23
M	CVSan operates a wastewater collection system in a seismically active region.	24
N	CVSan desires to have a long-term master plan for its wastewater treatment plant co-owned with Oro Loma Sanitary District (OLSD) that addresses the investments needed to meet current and future regulations, seismic activities, biosolids handling into the future, and sea level rise.	25
O	CVSan faces continually changing regulations associated with wastewater treatment and potential fines related to collection system spills.	26
P	CVSan should focus on completing its current set of capital projects (capacity improvement and pump station rehabilitation).	27
Q	Given the fast pace of change related to maintaining cybersecurity, CVSan should identify ways to improve the security and redundancy of its Information Technology (IT).	28
R	CVSan should focus on completing its current set of capital projects (capacity improvement and pump station rehabilitation).	16
S	CVSan would like to continue to improve its state-of-the-art Information Technology (IT)	17

Opportunities

The Board and Executive team described opportunities for CVSan that should be focused on as a part of this strategic planning effort. The numbers that follow the stated opportunities refer to a specific action that staff will focus on.

	Opportunities	Action
A	CVSan is interested in developing recycled water projects in partnership with the other EBDA member agencies (local purple pipe, Indirect Potable, Livermore-Amador Valley Water Management Agency (LAVWMA) pipeline/ Dublin San Ramon Services District (DSRSD).	29
B	CVSan would like to study the potential to consolidate all staff at one location and potentially construct a local HHW facility.	30
C	CVSan is interested in exploring sustainable energy resource opportunities.	31
D	CVSan would like to develop a strategy for the solid waste disposal and hauler agreement set to expire in 2029.	32
E	CVSan would like to continue to adopt new technologies such as smart lids, flow meters, and sonar testing.	33
F	CVSan would like to leverage existing outreach and education to raise awareness of recycling challenges due to China and other foreign country restrictions to meet 2029 CVSan zero waste goals.	34

2009
CALENDAR
RECYCLED
ART CONTEST
THIS
NOT THAT
Take a free
Produce Bag
CVSan

Actions

Actions were laid out to address the strengths, challenges and opportunities identified in the strategic planning process. It is recognized that not all actions can occur in the first year of the strategic plan, and several of the actions will require multiple years of effort. The anticipated year of commencement for an action is included. For the actions that require new resources, those will be laid out as a part of the annual Performance Indicators that are generated for the Board of Directors as a part of the preparation for the budgeting process.

In addition, while actions were identified for every challenge, there are a few opportunities and strengths that didn't require any action in this plan.

The actions fall into three groups. The first group are actions that play to strengths. These are the actions that typically start with the word "Continue" and reflect the great work that the CVSan Board, managers, and staff have been doing.

	Actions to address strengths	Strength	Year
1	Continue working towards the goal of Zero Waste by 2029 by continuing the 3rd grade 4Rs field trips and biannual Recycles Day Collection events.	A	2019
2	Continue to aggressively invest in the wastewater collection system, avoid spills, and compete in CWEA annual challenges.	B	2019
3	Continue financial best management practices, maintaining financial transparency, and competing in public agency competitions related to financial management.	C	2019
4	Continue CVSan's track record of providing exceptional customer service and being a high-performance organization.	D	2019
5	Board to continue to work with staff to maintain local and regional partnerships and create new partnerships at the state level through involvement with CASA.	E	2019
6	Continue CVSan's excellent record of complying with all applicable federal, state, and local laws. Continue to avoid spills.	F	2019
7	Continue to make safety a core value and maintain high quality safety manuals and training.	G	2019
8	Continue to invest CVSan time and resources into community outreach that informs the ratepayers through transparency and educates all residents on the work being done to maintain the strengths, and address the challenges and opportunities, laid out in this Strategic Plan.	H	2019
9	Continue to pursue proactive and innovative practices that can help meet anticipated new regulations and environmental laws.	I	2019

The next group of actions are required by challenges facing CVSan. These are the areas where some additional outreach or investigation will help CVSan better meet their mission statement.

	Actions to Address Challenges	Challenge	Year
10	Expand educational outreach program to include wastewater.	A	2020
11	Explore teaching a wastewater program at the same time water is covered as a part of the curriculum.	A	2020
12	Explore conducting wastewater treatment plant field trips at the time water is a part of the curriculum.	A	2020
13	Conduct a formal investigation where I&I is occurring.	B	2020
14	Create and implement an equitable negotiation strategy with EBDA partners.	C	2019
15	Continue CVSan's practice of establishing reasonable rates and fees.	D	2020
16	Create a proactive communications plan specifically to address rate increase concerns and engage the ratepayers through the CAC and any other opportunity to solicit community input.	E	2020
17	Require management and legal counsel to create detailed desk manuals and further implement existing succession plan.	F	2021
18	Complete a facilities plan that lays out all options related to consolidation of staff and operations and a potential HHW facility.	G	2020
19	Create CVSan core value statements and continue to motivate staff with career development opportunities.	H	2020
20	Use a collaborative process to agree on the principles and then negotiation of a new employment contract.	I	2019
21	Work with Alameda County Planning Department to find out plans associated with higher density living to help address housing shortages and look for outside grants and loans to see what funding might be available for new infrastructure and replacement of old. Engage with CASA staff who are developing a guide to state and federal funding for public agencies.	J	2020
22	Consult with fellow entities and state regulatory agencies responsible for resharping how MSW organics and recyclables will be sorted and managed. Based on that information, develop a CVSan plan that includes consultation with rate payers, education, and enforcement.	K	2022

23	Complete a seismic vulnerability assessment to identify the highest vulnerabilities associated with CVSan's infrastructure and identify the costs associated with mitigating the risks.	L	2024
24	Complete a treatment master plan (that includes long-term management of biosolids and addresses the need to anticipate seismic activities and sea level rise) with OLSD.	M	2024
25	Continue CVSan's excellent record of complying with and anticipating new federal, state, and local laws. Continue to avoid spills.	O	2019
26	Prioritize existing known capital projects in the wastewater collection system to be completed in the next 10 years.	P	2020
27	Complete the current IT Strategic Plan and stay current with the evolving cybersecurity best practices for a public agency.	Q	2021

This last group are strictly opportunity based. As the wastewater utilities continue to evolve, there are new technologies that can be explored, new relationships to build, and new opportunities to improve CVSan's operations.

	Actions Focused on Opportunities	Opportunity	Year
28	Once partners are identified, complete a recycled water master plan that considers all opportunities and partners.	A	2024
29	Complete a facilities plan that lays out all options related to consolidation of staff and operations and a potential HHW facility.	B	2020
30	Complete a comprehensive energy master plan.	C	2023
31	Generate negotiating a strategy for the solid waste disposal agreement that is set to expire in 2029 that includes new rules, education, and enforcement related to new sorting practices.	D	2025
32	Invest time in researching new technology.	E	2019

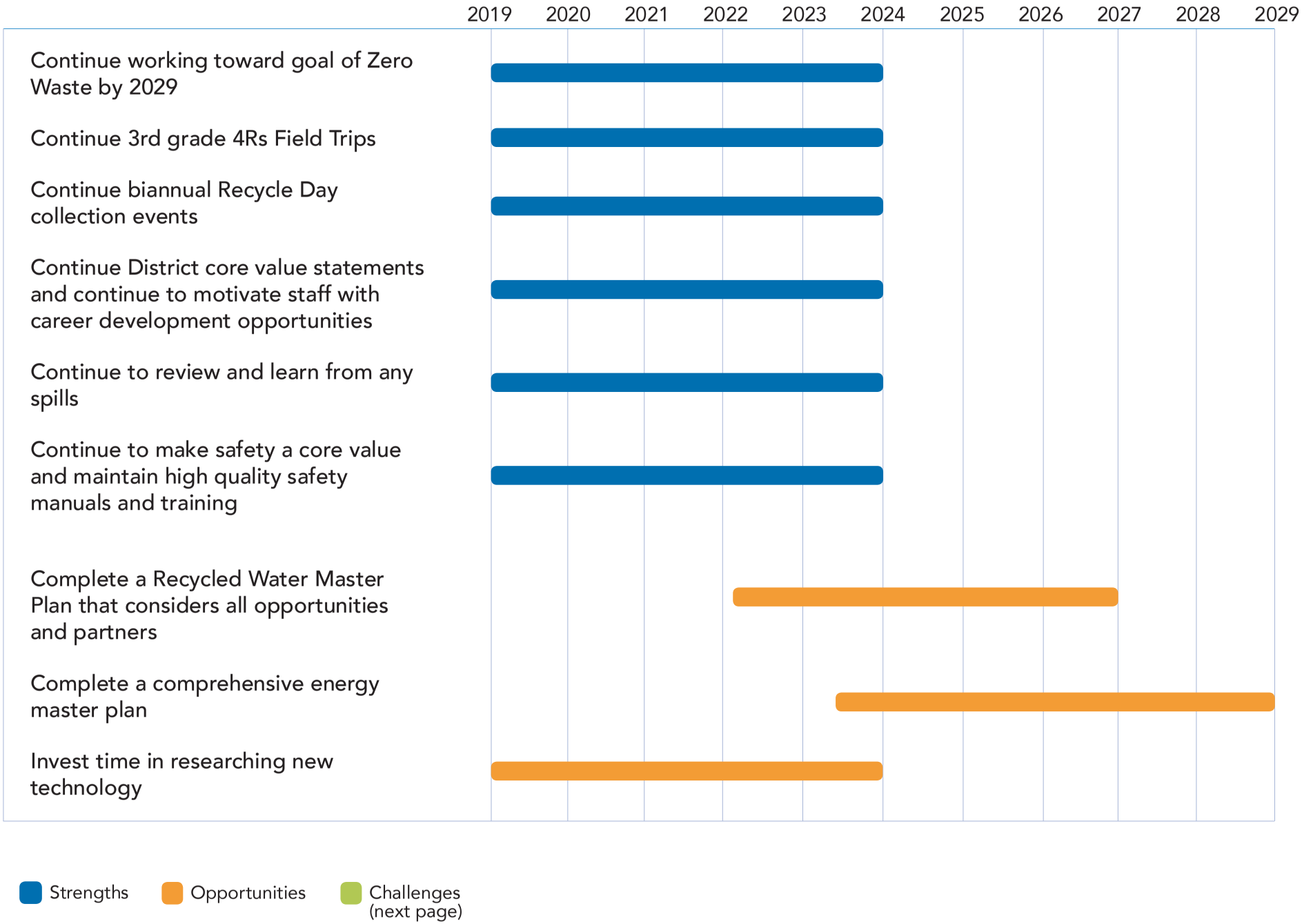
2019
2020
2021
2022
2023
2024
2025
2026
2027
2028
2029
Continue working toward goal of Zero Waste by 2029
Continue 3rd grade 4Rs Field Trips
Continue biannual Recycle Day collection events
Continue District core value statements and continue to motivate staff with career development opportunities
Continue to review and learn from any spills
Continue to make safety a core value and maintain high quality safety manuals and training
Complete a Recycled Water Master Plan that considers all opportunities and partners
Complete a comprehensive energy master plan
Invest time in researching new technology
Strengths
Opportunities
Challenges (next page)

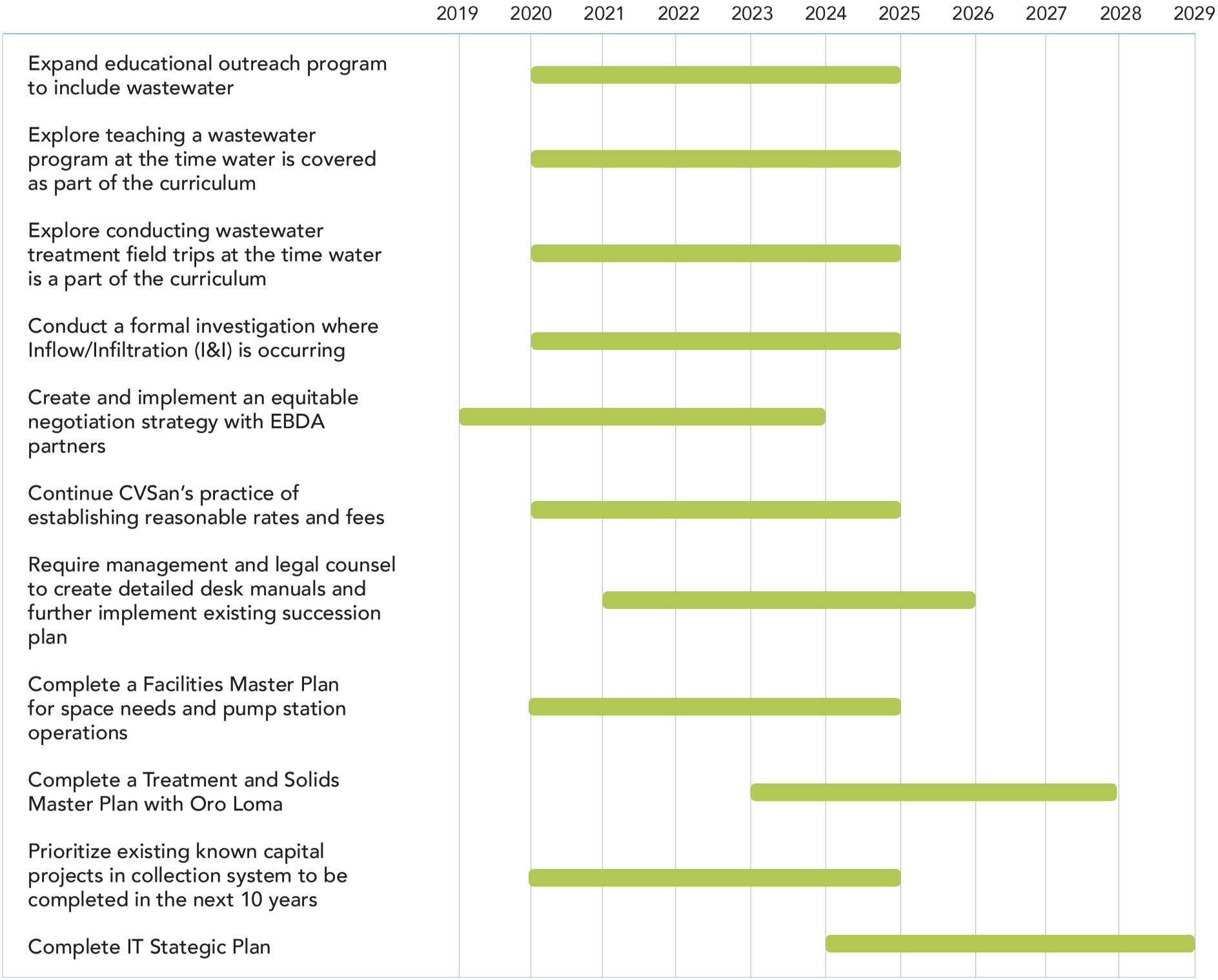
2019
2020
2021
2022
2023
2024
2025
2026
2027
2028
2029
Expand educational outreach program to include wastewater
Explore teaching a wastewater program at the time water is covered as part of the curriculum
Explore conducting wastewater treatment field trips at the time water is a part of the curriculum
Conduct a formal investigation where Inflow/Infiltration (I&I) is occurring
Create and implement an equitable negotiation strategy with EBDA partners
Continue CVSan's practice of establishing reasonable rates and fees
Require management and legal counsel to create detailed desk manuals and further implement existing succession plan
Complete a Facilities Master Plan for space needs and pump station operations
Complete a Treatment and Solids Master Plan with Oro Loma
Prioritize existing known capital projects in collection system to be completed in the next 10 years
Complete IT Stategic Plan

CVSan

Castro Valley Sanitary District
21040 Marshall Street
Castro Valley, CA 94546
www.cvsan.org | (510) 537-0757

(THIS PAGE INTENTIONALLY LEFT BLANK)

APPENDIX B

Staff Names, Positions, and Contact Information

Appendix B. Names, Positions, and Contact information

Position	Name	Telephone Number	SSMP Role
General Manager	Roland P. Williams Jr.	(510) 537-0882	LRO (Primary)
Associate Engineer	Landon Lochrie	(510) 756-0832	LRO (Secondary)
Engineering Technician	Garrick Horvath	(510) 756-0830	DS (Secondary)
Engineering Technician	Matthew Lee	(510) 756-3777	DS (Secondary)
Engineering Technician	Evan Choy	(510) 756-0823	DS (Secondary)
Collection System Maintenance Supervisor	Greg Williams	(510) 756-3666	LRO (Secondary) DS (Primary)
Senior Collection System Maintenance Worker	Kevin Dip	(510) 756-0820	DS (Secondary)
Senior Collection System Maintenance Worker	Gilbert Espinoza	(510) 756-3222	DS (Secondary)
Collection System Maintenance Technician	Jeff Zhong	(510) 756-3888	DS (Secondary)
Collection System Maintenance Worker	Lorenzo Grayson	(510) 756-0817	DS (Secondary)
Collection System Maintenance Worker	TBD	(510) 756-0833	DS (Secondary)

Last Revised: December 2022

(THIS PAGE INTENTIONALLY LEFT BLANK)

APPENDIX C

Collection System Maps

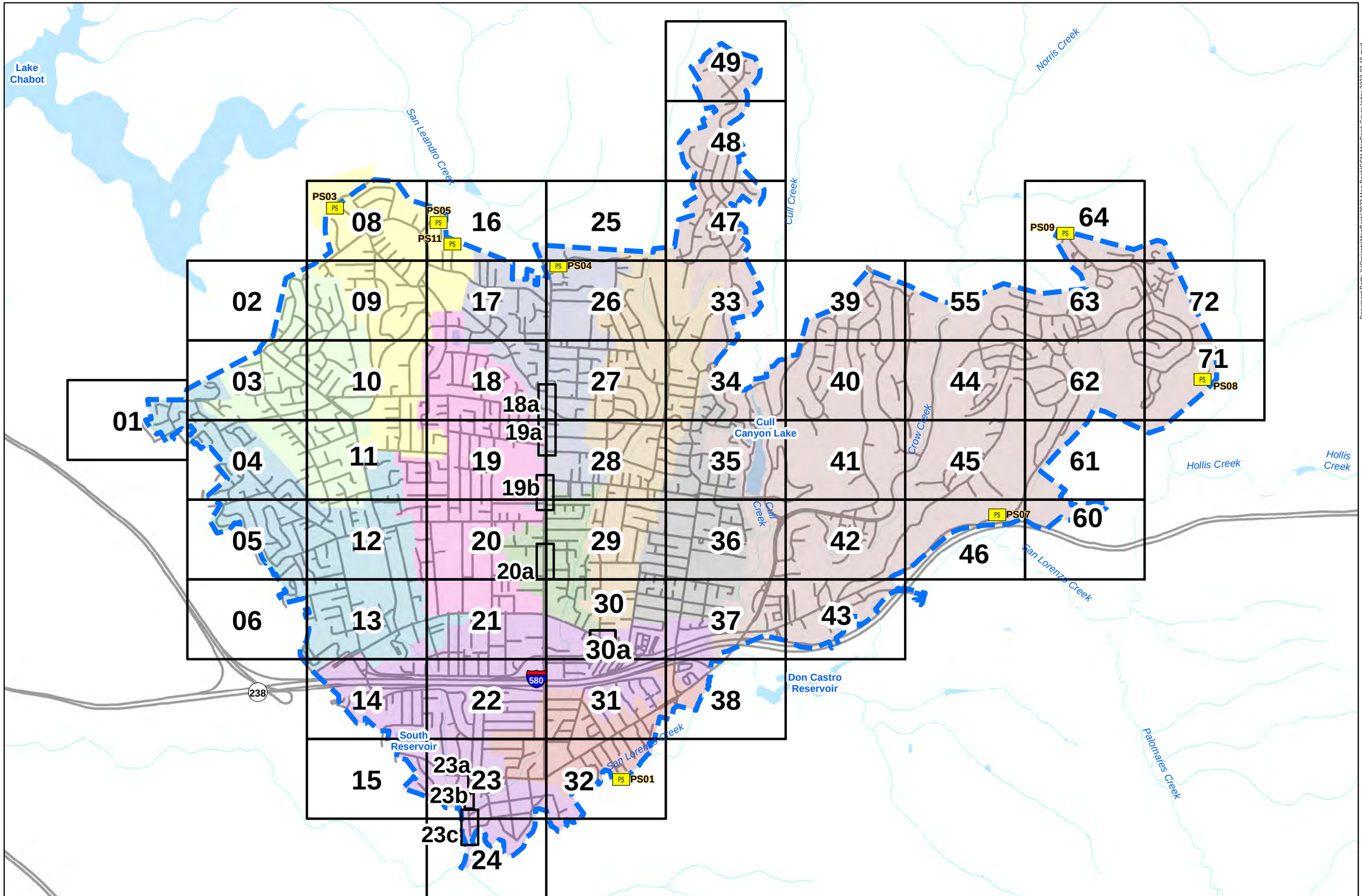

REV.

M. LEE
CVSan

Revision July 2022

Document Path: X:\Projects\MapBook\2022 Map Book\CSM MapBook Cover Index 2022-07-18.mxd

N

CASTRO VALLEY SANITARY DISTRICT
SEWER SYSTEM FACILITIES

GRAPHIC SCALE
0 100 200 300

INDEX

THE CASTRO VALLEY SANITARY DISTRICT ASSUMES NO LIABILITY FOR ERRORS OR OMISSIONS FOR UTILITY INFORMATION SHOWN ON THESE MAPS. ALL INFORMATION SHOULD BE FIELD VERIFIED.

Legend

PS Pump Stations

District Boundary

Streets

Sanitary Structure Inventory

Lampholes

Abandoned

Active

Fittings

DEAD END/PLUGGED LINE

UNKNOWN

WYE

Risers

Abandoned

Active

Sealed

Manholes

Abandoned

Active

Sealed

XX-XX Manhole #

X.X Manhole Depth, Rim to Invert

Sanitary Pipe Inventory

Abandoned Sewer Pipe

Overflow

Sanitary Sewer

Trunk Line

Active Force Mains

Exposed Aerials

HDPE Pipes

BASIN 1

BASIN 2

BASIN 3

BASIN 4

BASIN 5

BASIN 6

BASIN 7

BASIN 8

BASIN 9

BASIN 10

BASIN 11

REV.

M. LEE
CVSan

Revision July 2022

Document Path: X:\Projects\MapBook\2022 Map Book\CSM MapBook Legend 2022-07-18.mxd

N

CASTRO VALLEY SANITARY DISTRICT
SEWER SYSTEM FACILITIES

GRAPHIC SCALE
0 100 200 300

Scale: 1" = '

Legend

THE CASTRO VALLEY SANITARY DISTRICT ASSUMES NO LIABILITY FOR ERRORS OR OMISSIONS FOR UTILITY INFORMATION SHOWN ON THESE MAPS. ALL INFORMATION SHOULD BE FIELD VERIFIED.

Street Name	From	To	Page No
N 4TH ST	22225	22395	**23**
N 5TH ST	22134	23304	**23**
N 5TH ST	22415	22481	**24**
N 6TH ST	22515	22153	**23**
N 6TH ST	22521	22525	**24**
ACORN ST	2609	2699	**5**
ADA ST	21704	21956	**22**
ADAIR DR	19600	19632	**11**
ADAIR DR	19632	19671	**12**
AEGEAN PL	2828	2836	**11**
AGATE CT	18521	18541	**18**
AIRES CT	3592	3600	**20**
ALANA RD	19504	19523	**28**
ALANA RD	19522	19967	**29**
ALBORG CT	5490	5499	**39**
ALCORN PL	18600	18683	**27**
ALDERBROOK CT	5800	5873	**47**
ALEXIA PL	3939	4000	**18**
ALEXIS PL	3125	3149	**3**
ALMA AVE	4336	4651	**28**
ALMEDA ST	20400	20515	**13**
ALMOND CT	3758	3764	**11**
ALMOND CT	3769	3798	**19**
ALMOND HILL PL	3820	3832	**10**
ALMOND RD	17404	17454	**8**
ALMOND RD	17429	17705	**9**
ALMOND RD	17705	18421	**17**
ALMOND RD	18857	19174	**10**
ALMOND RD	19173	19292	**11**
ALPHA CT	19171	19191	**35**
ALTA MIRA CT	15975	15999	**25**
ALVERTUS AVE	19662	19698	**12**
ANITA AVE	19710	20259	**20**
ANITA AVE	20258	20535	**21**
ANITA CT	3250	3286	**12,20**
APRICOT CT	4902	4935	**27**
APRICOT WAY	17802	17905	**26**

Street Name	From	To	Page No
APRICOT WAY	17910	18471	**27**
APRIL CT	17740	17744	**2**
ARCADIAN CT	3514	3644	**2**
ARCADIAN DR	3305	3455	**3**
ARCADIAN DR	3450	3684	**2**
ARCADIAN DR	4110	4193	**9**
ARCADIAN DR	4168	4461	**8**
ASHFIELD AVE	20862	21118	**21**
ASHFIELD AVE	21119	21167	**22**
ASPEN AVE	21100	21143	**30**
ASPEN AVE	21142	21172	**31**
AUDREY DR	4704	4984	**27**
AUGUST CT	5038	5069	**35**
AUSTIN CT	2352	2452	**5**
AUSTIN LN	19801	20029	**5**
AUSTIN LN	20026	20117	**6**
AYLESBURY CT	3113	3194	**3**
BADDING RD	3302	3445	**11**
BADDING RD	3450	3587	**19**
BADGER CT	5805	5849	**40**
BAINS CT			**34**
BAKER RD	20785	20785	**13**
BAKER RD	21112	20812	**21**
BAKER RD	21113	21168	**22**
BALKAN CT	5477	5490	**40**
BARCLAY CT	2753	2777	**12**
BARCLAY RD	19295	19473	**11**
BARCLAY RD	19531	19644	**12**
BARLOW CT	19524	19532	**12**
BARLOW DR	2719	2751	**12**
BARLOW DR	2724	3298	**11**
BARNHILL LN	22011	22041	**43**
BARRETT CT	3100	3244	**11**
BATES WAY	5157	5172	**26**
BAYWOOD AVE	21605	21617	**22**
BAYWOOD AVE	21618	22091	**23**
BEACON HILL CT	20403	20440	**42**

Street Name	From	To	Page No
BEACON HILL DR	4775	4785	**36**
BEACON HILL DR	4799	5034	**42**
BEARDSLEY ST	17893	19743	**26**
BEARDSLEY ST	17982	17995	**27**
BELLE ST	22020	22170	**23**
BELLHURST CT	6400	6499	**49**
BELLHURST LN	6509	6701	**49**
BELLINGHAM DR	5900	5946	**47**
BELLINGHAM DR	5952	6200	**48**
BELMONT WAY	4460	4486	**8**
BERDINA RD	4002	4218	**29**
BERNAL ST	19622	19695	**12**
BETLEN CT	2751	2797	**31**
BETLEN WAY	21885	22265	**31**
BETROSE CT	19617	19697	**12**
BEVERLY PL	4176	4232	**28**
BLACKBERRY LN	5004	5019	**26**
BLUE BIRD CT	5833	5850	**55**
BONSAI PL	3928	3940	**19**
BOONE DR	6030	6318	**44**
BOONE DR	6318	6498	**55**
BOWIE WAY	6600	6685	**63**
BRANDON PL	2637	2641	**14**
BRECON CT	2515	2557	**31**
BRENT CT	3130	3173	**11**
BRET HARTE CT	6500	6580	**55**
BRIAR RIDGE DR	5310	5450	**34**
BRIAR RIDGE DR	5446	5454	**40**
BRIAR RIDGE DR	5456	5468	**39**
BRICKELL WAY	18705	18768	**27**
BRICKELL WAY	18836	18937	**28**
BRIERLY CT	16978	16997	**8**
BRITTANY CT	20149	20197	**30**
BROM CIR	5206	5230	**34**
BROOKDALE BLVD	3304	3462	**3**
BROOKDALE BLVD	3468	3637	**10**
BROOKDALE BLVD	3638	3912	**9**

Street Name	From	To	Page No
BRUCE CT	5129	5161	**35**
BRUSK CT	19330	19389	**11**
BUREN PL	18460	19560	**63,64**
BUTI PARK CT	17653	17742	**17**
BUTI PARK DR	4972	4988	**17**
BUTI PARK DR	4990	4990	**26**
BUTTERFIELD DR	20023	20194	**12**
BUTTERFIELD DR	20205	20209	**13**
CALDWELL CT	7890	7902	**72**
CALIFORNIA ST	18828	18846	**18**
CALIFORNIA ST	18852	18989	**19**
CAMA LN	3546	3610	**37**
CAMELOT LN	17757	17777	**17**
CAMEO CT	18800	18856	**18**
CAMERON ST	21993	22336	**31**
CAMERON ST	22333	22478	**32**
CAMINO ALTA MIRA	5010	5370	**25,26**
CANYON HILL CT	5231	5294	**33**
CAPE EDEN PLACE			**31**
CAPRICORN CT	18492	18492	**9**
CAPRICORN CT	18514	18712	**18**
CAPRICORN CT	18649	18728	**10**
CARDINAL CT	17280	17475	**16**
CARDINAL CT	17475	17520	**17**
CARLEEN CT	19601	19610	**11**
CARLEEN DR	3031	3196	**12**
CARLTON AVE	18051	19592	**3,4,11,12**
CARLTON CT	19584	19590	**12**
CARLWYN CT	3700	3725	**10**
CARLWYN DR	18314	18370	**9**
CARLWYN DR	18377	18617	**10**
CARMEL DR	17841	17850	**2**
CARMEL DR	17849	18381	**3**
CARMEL DR	18374	18594	**10**
CARNATION CT	2613	2621	**12**
CARNATION LN	19729	19889	**12**
CARSON LN	18833	19194	**44, 62**

Street Name	From	To	Page No
CARTER LN	2385	2393	**13**
CASA LA CRESTA	4415	4415	**17**
CASTLEBROOK DR	5940	5975	**47**
CASTLEBROOK DR	5980	6091	**48**
CASTRO VALLEY BLVD	2405	2495	**14**
CASTRO VALLEY BLVD	2475	2806	**13**
CASTRO VALLEY BLVD	2805	3495	**21**
CASTRO VALLEY BLVD	3538	3998	**30**
CASTRO VALLEY BLVD	3875	3913	**31**
E CASTRO VALLEY BLVD	3590	3812	**37**
E CASTRO VALLEY BLVD	3590	3812	**37**
E CASTRO VALLEY BLVD	3891	4455	**43**
CATALINA CT	3721	3756	**30**
CATALINA DR	20009	20204	**29**
CATALINA DR	20217	20348	**30**
CATO CT			**30**
E CAVENDISH DR	18635	18657	**39**
E CAVENDISH DR	18660	18793	**40**
W CAVENDISH DR	18584	18655	**39**
W CAVENDISH DR	18656	18906	**40**
W CAVENDISH DR	18858	18858	**41**
CEDAR BROOK CT	5731	5743	**47**
CEEKAY CT	2855	2876	**31**
CENTER ST	17811	18398	**33**
CENTER ST	18398	18767	**34**
CENTER ST	18766	19201	**35**
CENTER ST	19204	19953	**36**
CENTER ST	20012	21195	**37**
CENTER ST	22021	22175	**38**
CHAPARRAL LN	22003	22023	**43**
CHAPARRAL PL	4162	4171	**43**
CHARLENE WAY	22408	22526	**32**
CHARTER OAKS DR	5800	5945	**47**
CHATEAU CT	17600	17749	**33**
CHESTER ST	20821	20998	**21**
CHLOE CT	2806	2836	**4**
CHLOE CT	2831	2842	**11**

Street Name	From	To	Page No
CHRISTENSEN CT	19130	19164	**11**
CHRISTENSEN LN	3313	3675	**11**
CHRISTENSEN LN	3675	3742	**19**
CINDY WAY	18760	18853	**4**
CIRCLE AVE	4255	4322	**29**
CIRCLE AVE	4327	4376	**36**
CLARA LEE LN	3975	3996	**30**
CLEMANS DR	19004	19084	**35**
CLEMENT DR	18601	18972	**55**
CLIFFORD CT	3581	3594	**11**
CLIFTON WAY	18376	18515	**10**
COHOE CT	2642	2684	**14**
COLD WATER DR	3550	5569	**45**
COLD WATER DR	5562	5622	**41**
COLD WATER DR	5614	5794	**40**
COLD WATER DR	5794	5898	**39**
COLUMBIA DR	16579	16743	**49**
COLUMBIA DR	16792	17113	**48**
COLUMBIA DR	17129	17476	**47**
COLUMBIA DR	17701	18097	**33**
COLUMBIA DR	18128	18128	**34**
COMMON RD			**33,34**
CONGRESS WAY	20607	20635	**13**
CONRAD CT	19911	19935	**20**
COOLIDGE CT	7743	7804	**64**
COREY WAY	19260	19390	**28**
CORTE RUBIOLO	3629	3642	**20**
CORTEZ CT	2751	2799	**13**
COTTAGE CT	3705	3797	**19**
COTTON CT	18400	18416	**40**
COWELL ST	16559	16670	**5**
CRAIG CT	2519	2584	**32**
CRANE AVE	5125	18783	**34**
CRANE AVE	18770	18795	**35**
CRAWFORD PL	19535	19550	**20**
CRESCENT AVE	1403	1535	**24**
CRESCENT AVE	1540	1866	**23**

Street Name	From	To	Page No
CREST AVE	18203	18226	**3**
CREST AVE	18211	18658	**1**
CREST AVE	18624	18624	**4**
CRESTWOOD DR	6400	6689	**62**
CRISTY WAY	4419	4579	**18**
CRISTY WAY	4424	4679	**17**
CROW CANYON PL	4524	4648	**37**
CROW CANYON RD	4420	4667	**37**
CROW CANYON RD	4672	4929	**36**
CROW CANYON RD	4937	5557	**42**
CROW CANYON RD	5560	5592	**41**
CROW CANYON RD	5589	6000	**45**
CROW CANYON RD	5851	5851	**44**
CROW CREEK RD	19875	20746	**42**
CROWN CT	5267	5392	**41**
CRYSTAL CT	2829	2884	**31**
CULL CANYON RD	18698	19855	**34,35,36**
CUNNINGHAM CT	5151	5184	**34**
CYPRESS RNCH	20200	20908	**45**
DALMATIA PL	19019	19043	**4**
DALMATIA PL	19019	19036	**5**
DANA CT	6536	6595	**62**
DANIELLE WAY	4171	4205	**8**
DARCREST CT	19356	19380	**28**
DARLENE CT	2702	2738	**4**
DAVID ST	4105	4158	**30**
DAVID ST	4161	4298	**37**
DAWE AVE	21104	21113	**21**
DAWE AVE	21120	21177	**22**
DAWN VIEW CT	5800	5808	**55**
DAWN VIEW CT	5801	5807	**44**
DE SOUZA PL	18011	18100	**27**
DELANEY CT	2709	2792	**13, 21**
DELLHAVEN CT	17401	17450	**47**
DENISE LN	3815	3846	**9**
DENISON PL	7497	7534	**71**
DENISON PL	7517	7598	**72**

Street Name	From	To	Page No
DENISON PL	7538	7546	**62**
DENNING CT	2501	2541	**13**
DIAMOND CT	20050	20073	**37**
DOLORES ST	21503	21786	**22**
DOLORES ST	21818	22186	**23**
DOMINIC CT	2929	2971	**3**
DOMINIC DR	3102	3296	**3**
DOMINIC LN	18450	18482	**3**
DORIS CT	18519	18580	**27**
DORSON LN	17507	17710	**17**
DUBIN CT	18708	18765	**3**
DUBIN CT	18716	18732	**10**
DUBIN CT	18740	18748	**11**
DUBIN CT	18756	18781	**4**
DUNNIGAN CT	5271	5286	**34**
EAGLE ST	19517	19572	**5**
EARL DR	22120	22149	**23,23B**
EASY ST	2438	2497	**1**
EDEN VIEW PL	17959	17960	**2627**
EDGEWOOD CIR	20610	20800	**62**
EDGEWOOD WAY	6670	6688	**62**
EDWARDS LN	4304	4431	**29**
EDWARDS LN	4420	4597	**36**
EDWIN MARKHAM DR	18726	19211	**55**
EDWIN MARKHAM DR	19210	19910	**63**
EDWIN MARKHAM DR	19561	20181	**62**
EL CAMINITO CT	5322	5357	**26**
ELAINE CT	5378	5394	**33**
ELBRIDGE CT	20930	20974	**72**
ELBRIDGE CT	20971	20979	**71**
ELM ST	21123	21195	**31**
ELROD DR	4904	5095	**27**
ELVIRA PL	4341	4350	**19**
EMERALD CT	20046	20113	**37**
EMILY CT	4602	4684	**27**
EUGENE TER	2835	2890	**3**
EWING RD	4403	4789	**8**

Street Name	From	To	Page No
EWING RD	4674	4790	**16**
EWING RD	4793	4793	**9**
EWING RD	4796	4796	**17**
FARLEY ST	2219	2376	**22**
FEATHER CT	5521	5529	**41**
FERDINANDA PL	4328	4336	**18**
FERDINANDA PL	4331	4339	**19**
FERN WAY	19603	19961	**29**
FLEETWOOD AVE	18412	18487	**18**
FOREST AVE	19525	19599	**28**
FOREST AVE	19600	20264	**29**
FOREST AVE	20264	20680	**30**
FOREST CIR	3901	3957	**30**
FOREST CT	4410	4425	**28**
FOREST GLEN PL	4205	4233	**29**
FOREST PL	19400	19427	**28**
FOX RIDGE DR	2401	2625	**4**
FOXBORO DR	5004	5035	**26**
FRANCIS CT	3100	3101	**21**
FRANCIS ST	20934	21026	**21**
FRANCIS ST	21054	21186	**22**
FREMERY CT	19651	19676	**29**
GAIL DR	21679	21724	**15**
GAIL DR	21730	21742	**23**
GANIC ST	2770	2790	**12**
GANIC ST	2771	2793	**13**
GANNETT PL	19756	19765	**42**
GARDLAND CT	17522	17676	**9**
GARNET CT	20046	20059	**29**
GARNET CT	20059	20065	**30**
GARRISON AVE	19107	19496	**19**
GARRISON AVE	19511	19544	**20**
GEM AVE	4204	4260	**29**
GEM AVE	4266	4346	**36**
GEM AVE	4271	4448	**37**
GEM CT	20000	20058	**37**
GIANNINI CT	6654	6682	**55**

Street Name	From	To	Page No
GIANNINI CT	6669	6683	**63**
GIOVANA WAY	2946	2989	**4**
GLENWOOD DR	20126	21003	**62**
GLENWOOD DR	20968	21080	**44**
GLIDDON ST	19010	19196	**35**
GORDON RD	4600	4692	**18**
GREENACRE RD	4006	4109	**30**
GREENHILLS AVE	3579	3700	**11**
GREENHILLS AVE	3707	3724	**19**
GREENRIDGE CT	18500	18581	**39**
GREENRIDGE RD	5275	5335	**42**
GREENRIDGE RD	5322	5604	**41**
GREENRIDGE RD	5605	5881	**40**
GREENRIDGE RD	5878	6132	**39**
GREENVIEW CT	21892	21899	**31**
GREENVIEW DR	2747	3122	**31**
GREENVILLE PL	7300	7670	**63,72**
GREENWOOD CIR	21000	21012	**62**
GREENWOOD CIR	21024	21024	**61**
GREGORY ST	4314	4374	**29**
GRENADIER PL	4533	4633	**9**
GRENADIER PL	4608	4638	**8**
GREY FOX DR	19200	19250	**4, 5**
GROVE WAY	1706	1867	**15**
GROVE WAY	1866	2380	**23**
GROVE WAY	2416	2687	**32**
GROVE WAY	2648	2944	**31**
GROVE WAY	2905	3151	**38**
GROVENOR DR			**8**
HACKBERRY PL	3900	3988	**9**
HALEY DR	4802	4876	**27**
HALLMARK CT	16800	16891	**48**
HASTINGS WAY	18434	18500	**18**
HAYES ST	19025	19080	**11**
HEIDI ST	18898	18907	**11**
HELEN PL	19503	19563	**28**
HELTON CT	5120	5125	**35**

Street Name	From	To	Page No
HELTON ST	19009	19099	**35**
HENSON PL	4963	4979	**27**
HERTLEIN PL	3220	3275	**11**
HEYER AVE	4597	4661	**29**
HEYER AVE	4673	5035	**36**
HEYER HTS	19511	19526	**28**
HEYER HTS	19536	19536	**29**
HEYER LN	19262	19292	**28**
HIDDENVIEW PL	18000	18028	**27**
HIGH PINE WAY	17007	17048	**16**
HIGH PINE WAY	17033	17060	**8**
HIGH RIDGE PL	4160	4169	**43**
HIGHLAND DR	21227	21383	**37**
HIGHWOOD RD	5750	5882	**40**
HIGHWOOD RD	5885	5964	**39**
HILLSBOROUGH DR	4466	4539	**8**
HILLSIDE CT	17656	17859	**17**
HILLSIDE DR	4669	4821	**17**
HILLSIDE LN	17807	17822	**17**
HILLSIDE PL	4621	4657	**17**
HINTON CT	16987	16994	**8**
HINTON ST	16978	16984	**8**
HOBERT ST	21234	21347	**14**
HOFFMAN WAY	21883	21916	**31**
HOLLAND PL	19235	19356	**28**
HUBER DR	18801	18846	**10**
HUBER DR	18839	18918	**11**
HUNTERS KNLS	20300	20329	**45**
HUNTERS KNLS	20340	20360	**44**
HUNTINGTON CT	3120	3176	**3**
IDENA AVE	21544	22046	**31**
IDENA AVE	22100	22100	**32**
INDEPENDENT SCHOOL RD	21201	21201	**42**
INDEPENDENT SCHOOL RD	21603	21995	**43**
IONE AVE	2635	2652	**31**
IRMA WAY	2400	2491	**1**
JAMES AVE	4200	4731	**28**

Street Name	From	To	Page No
JAMES AVE	4730	5131	**35**
JAMES PL	19245	19269	**28**
JAMISON WAY	3450	3650	**20**
JASMINE CT	5500	5509	**40**
JAYDINE ST	19554	19563	**29**
JAYMARK CT	18036	18076	**9**
JEANINE WAY	3310	3332	**20**
JEFFER ST	2211	2398	**23**
JEFFREY CT	2750	2775	**12**
JENNIFER DR	2814	2830	**11**
JENNIFER DR	2819	2829	**05**
JENNIFER DR	2831	2879	**12**
JENSEN RANCH RD	6600	6650	**63**
JENSEN RANCH RD	20010	20022	**63**
JENSEN RD	4920	5117	**43**
JENSEN RD	5020	5309	**42**
JENSEN RD	5275	5511	**46**
JENSEN RD	5494	5901	**45**
JENSEN RD	5901	5922	**44**
JERALD CT	3559	3596	**11**
JESSEE CT	19912	20026	**63**
JESSEE CT	20003	20099	**62**
JILL WAY	18323	18396	**03**
JOHN DR			**13**
JONES ST	2663	2670	**31**
JORDS CT	4310	4317	**17**
JOSEPH DR	17894	18072	**17**
JOSEPH DR	18049	18498	**18**
JOSH PL	19918	19939	**20**
JUDY ST	18053	18233	**27**
JUNIPER ST	3588	3644	**31**
JUSTCO LN	21001	21353	**37**
JUSTCO LN	21256	21662	**43**
KAHLERT AVE	21211	21336	**14**
KARRIS LN	19100	19160	**4**
KATHLEEN AVE	4805	4829	**28**
KATHLEEN AVE	4828	4989	**35**

A-4

Street Name	From	To	Page No
KATRINA CT	5232	5272	**34**
KEITH AVE	3009	3277	**11**
KENMORE CT	3701	3754	**30**
KERR ST	2756	3271	**21**
KEVIN CT	5011	5065	**27**
KILDARE RD	16586	16752	**5**
KINGSTON WAY	17465	17990	**9**
KINNEY CT	19653	19678	**29**
KIPLING ST	2218	2265	**23**
KIT FOX PL	19108	19127	**4**
KIT LN	6700	6730	**62**
KNIGHT DR	3805	18165	**9**
KNOLL WAY	21679	21708	**15**
KNOX ST	1536	1920	**23**
KNUPPE PL	21122	21696	**45**
KROLOP RD	4097	4235	**9**
LA CASA LN	19150	19165	**28**
LA COSTA AVE	3627	3702	**11**
LA COSTA AVE	3707	3759	**19**
LA DON CT	2542	2576	**13**
LAIRD CT	18009	18026	**17**
LAKE CHABOT LN	2930	2967	**12**
LAKE CHABOT RD	18172	18463	**3**
LAKE CHABOT RD	18396	18950	**10**
LAKE CHABOT RD	18911	19576	**11**
LAKE CHABOT RD	19527	20094	**12**
LAKE CHABOT RD	20122	20757	**13**
LAKE CHABOT RD	21225	21637	**22**
LAKE CHABOT RD	21651	21693	**23**
LAKECREST CT	18403	18452	**3**
LAKERIDGE RD	19200	19309	**11**
LAMAR LOOP	7195	7195	**64**
LAMAR LOOP	7205	7345	**63**
LAMONT CT	16981	16998	**8**
LAMSON RD	17875	18386	**17**
LAMSON RD	18241	18561	**9**
LAMSON RD	18561	18999	**10**

Street Name	From	To	Page No
LANGON PL	19350	19378	**11**
LANTANA CT	22109	22266	**32**
LAREDO RD	18589	18632	**3**
LAREDO RD	18623	18639	**4**
LARIAT LN	6876	6947	**63**
LARIMER WAY	4812	4896	**36**
LAURELWOOD DR	19662	20144	**63**
LAWRENCE DR	4208	4633	**18**
LEAVITT CT	4018	4034	**29**
LEILA ST	1918	1969	**23**
LEMAS PL	19100	19220	**28**
LENARD DR	3190	3317	**12**
LENARD DR	3322	3484	**20**
LENROSS CT	18812	18859	**18**
LENROSS CT	18858	18872	**19**
LEROY DR	20015	20196	**20**
LESSLEY AVE	2107	2479	**23**
LESSLEY AVE	2108	2356	**22**
LESSLEY AVE	2509	2546	**32**
LINDSAY LN	3905	3965	**9**
LINK CT	3850	3898	**18**
LOAN OAK PL	4900	4980	**28**
LOBERT ST	2203	2299	**22**
LOCKRIDGE WAY	4625	4638	**17**
LOCKRIDGE WAY	4629	4670	**18**
LODI WAY	4801	4867	**27**
LOMOND WAY	18434	18450	**39**
LONGMONT LP	7280	7349	**63**
LORENA AVE	3615	3896	**20, 20A**
LORENA CIR	19945	19993	**20**
LORENA PL	20000	20098	**20, 20A**
LOTUS CT	3906	3911	**19**
LOUISE CT	19740	19794	**12**
LOUKOS PL	18713	18729	**10**
LUCERNE CT	3148	3196	**11**
LUELLA PL	3959	3969	**18**
LUX AVE	3719	3890	**19**

Street Name	From	To	Page No
E LYNDON LOOP	22004	22284	**71**
E LYNDON LOOP	22294	22314	**62**
W LYNDON LOOP	22100	22295	**71**
W LYNDON LOOP	22305	22375	**62**
LYNETTE ST	3057	3065	**31**
LYNWOOD CT	5601	5613	**33**
MABEL AVE	3801	3997	**20**
MABEL AVE	4011	4273	**29**
MABEL PL	19712	19718	**29**
MADISON AVE	17589	18261	**26**
MADISON AVE	18769	18786	**27**
MADISON AVE	18793	19198	**28**
MADISON LN	5125	5149	**34**
MAFFEY DR	18232	18363	**18**
MAGDALENA PL	3246	3272	**11**
MAGEE WAY	18380	18493	**18**
MALABAR AVE	4511	4796	**27**
MALABAR PL			**27**
MANCINI DR	4808	4880	**27**
MANTER CT	4603	4686	**37**
MANTER CT	4637	4687	**43**
MANTER CT	4707	4707	**42**
MANTER RD	20700	20907	**36**
MANTER RD	20800	20975	**42**
MARCIEL CT	18931	18986	**10**
MARIA CT	20634	20675	**30**
MARQUES CT	3411	3496	**10**
MARSHALL LN	40226	4090	**30**
MARSHALL ST	20111	20111	**29**
MARSHALL ST	20258	21022	**30**
MASSACHUSETTS AVE	2935	3099	**11**
MASTERSON PL	18700	18935	**55**
MASTERSON PL	18934	19252	**63**
MAYBERRY DR	19000	19044	**10**
MAYBERRY DR	19046	19153	**11**
MAYFLOWER DR	17101	17529	**02**
MAYFLOWER DR	17332	17994	**09**

Street Name	From	To	Page No
MCLOUD AVE	2442	2498	**13**
MEADOWLARK CT	4020	4045	**29**
MEADOWLARK DR	19980	20156	**29**
MEADOWLARK DR	20169	20295	**30**
MEADOWOOD RD	19202	19258	**19**
MEADOWVIEW DR	4003	4108	**30**
MEDALLION CT	5700	5740	**33**
MEG CT	2070	2075	**22**
MEL LN	19551	19563	**29**
MELISSA LN	3847	3876	**9**
MERRILL PL	19400	19442	**28**
MESA VERDE WAY	18491	18588	**39**
MESA VERDE WAY	18588	18599	**55**
MICHAELS CT	19700	19745	**12**
MIDDLETON AVE	3407	3497	**10**
MIDSUMMER LN	17301	17507	**26**
MIKEMARY CT	2404	2477	**1**
MILMAR BLVD	18384	18512	**18**
MILTON AVE	4005	4086	**18**
MIRA LOMA ST	4602	4797	**27**
MIRA VISTA DR	4705	4757	**16**
MIRA VISTA PL	16990	16999	**16**
MIRAMAR AVE	2537	2664	**4, 5**
MODESTO ST	3807	3880	**29**
MOLLIE CT	19753	20076	**63**
MONTE VERDE CT	6065	6080	**39**
MORALES CT	22227	22390	**32**
MORELAND DR	4075	4380	**18**
MORTON PL	7206	7206	**64**
MOUNT DIABLO CT	6054	6167	**44**
MOUNT HAMILTON CT	6020	6033	**44**
MOUNT HOOD WAY	19003	19025	**44**
MOUNT JASPER DR	18802	19530	**44**
MOUNT JASPER DR	19539	19635	**62**
MOUNT LASSEN DR	18619	19642	**44**
MOUNT LASSEN DR	19592	19700	**62**
MOUNT OLYMPUS DR	6000	6444	**44**

Street Name	From	To	Page No
MOUNT RUSHMORE CIR	6037	6236	**44**
MOUNT SHASTA CT	6153	6161	**44**
MOUNTAIN CT	5770	5778	**40**
MOUNTAIN LN	18508	18543	**39**
MOUNTAIN LN	18544	18574	**40**
MOYERS ST	22108	22438	**32**
NANDO CT	4214	4263	**19**
NANDO CT	4274	4298	**18**
NASH WAY	5320	5326	**34**
NATALIE CT	18901	18937	**4**
NATALIE CT	18902	18986	**11**
NEWHAVEN WAY	4502	4641	**36**
NICHANDROS ST	3905	4133	**29**
NICOLE PL	4829	4830	**17**
NORBRIDGE AVE	1700	2720	**14**
NORBRIDGE AVE	2750	3140	**22**
NORBRIDGE AVE	3600	3600	**30**
NORDELL AVE	2512	2586	**12**
NORDELL AVE	2513	2529	**13**
NOREE CT	4761	4793	**36**
NORMANDY CT	20114	20199	**30**
NORTHWOOD DR	3464	3492	**3**
NORTHWOOD DR	3495	3513	**10**
NORTHWOOD DR	3498	3504	**2**
NORTHWOOD DR	3510	3654	**9**
NUGGET CANYON DR	21900	21988	**37**
NUNES AVE	20817	21031	**21**
NUNES AVE	21054	21199	**22**
OAK CANYON PL	17353	17493	**16**
OAKSHIRE PL	17445	17620	**17**
OGILVIE DR	18385	18489	**18**
OLEANDER WAY	3981	3999	**9**
OMEGA AVE	4109	4284	**29**
OMEGA AVE	4291	4348	**36**
ONYX CT	20020	20020	**36**
ONYX CT	20021	20021	**29**
ONYX CT	20054	20076	**37**

Street Name	From	To	Page No
ONYX CT	20055	20077	**30**
OPAL CT	20018	20075	**37**
ORANGE AVE	21225	21614	**22**
ORANGE AVE	21720	22152	**23**
OUTLOOK CT	21315	21315	**14**
OUTLOOK CT	21320	21487	**22**
PARADISE KNLS	4418	4594	**36**
PARK WAY	20300	20737	**13**
PARKER RD	17400	17899	**9**
PARKVIEW RD	19222	19327	**36**
PARSONS AVE	18765	18930	**18**
PARSONS AVE	18933	19526	**19**
PARSONS AVE	19543	19655	**20**
PARSONS CT	3636	3693	**19**
PATIO DR	20638	20638	**21**
PATTON DR	18901	18934	**18**
PATTON DR	18941	18989	**19**
PEPPER ST	18293	18755	**27**
PERGOLA CT	4030	4069	**43**
PERRICH AVE	2700	2798	**4**
PETERSEN WAY	17643	17722	**2**
PETERSEN WAY	17770	17993	**9**
PHEASANT WOODS DR	21550	22000	**43**
PINE ST	3414	3656	**31**
PINECREST CT	6526	6551	**49**
PINEHAVEN PL	19244	19248	**28**
PINERIDGE RD	2719	2792	**3**
PINEVILLE CIR	7610	8012	**72**
PINEVILLE CIR	7706	7839	**71**
PINEVILLE CIR	7911	8000	**63**
PLYMOUTH DR	18153	18259	**17**
PLYMOUTH DR	18265	18483	**18**
PRESIDIO CT	19900	19920	**42**
PRINCETON PL	22266	22986	**71**
PROCTOR LN	5300	5330	**26**
PROCTOR RD	4603	4999	**17**
PROCTOR RD	5000	5373	**25, 26**

Street Name	From	To	Page No
QUAIL AVE	3520	3694	**10**
QUAIL HOLLOW PL	4185	4205	**9**
QUEEN CT	21980	21992	**31**
QUEEN ST	21980	22118	**31**
QUEEN ST	22113	22484	**32**
RAHLVES DR	5004	5294	**34**
RAHLVES DR	5011	5194	**35**
RANSPOT DR	2375	2490	**5**
RAVENWOOD PL	4101	4179	**37**
RAWHIDE WAY	20009	20090	**63**
RAY AVE	5012	5013	**28**
RAY AVE	5018	5136	**35**
READING AVE	2217	2382	**22**
REAMER RD	18006	18761	**9**
REDWOOD CT	3435	3456	**21**
REDWOOD HEIGHTS	4310	4335	**28**
REDWOOD RD	17260	17272	**25**
REDWOOD RD	17262	17264	**16**
REDWOOD RD	17272	17944	**26**
REDWOOD RD	17956	18850	**27**
REDWOOD RD	17957	18545	**18**
REDWOOD RD	18864	19562	**28**
REDWOOD RD	19125	19271	**19**
REDWOOD RD	19648	20200	**29**
REDWOOD RD	19693	20235	**20**
REDWOOD RD	20226	21060	**30**
REDWOOD RD	20253	21049	**21**
REDWOOD RD	21091	22097	**22**
REDWOOD RD	22101	22343	**23**
REDWOOD RD	22120	22360	**32**
REEDLEY WAY	5202	5268	**26**
REMCO ST	3440	3487	**3**
REMCO ST	3472	3542	**2**
RENTON WAY	2605	2664	**13**
RIDGE CREST CT	2508	2568	**1**
RIDGE CREST CT	2572	2578	**3**
W RIDGE CT	20211	20260	**13**

Street Name	From	To	Page No
RIDGEWOOD DR	6550	6635	**61, 62**
RIFFEL CT	2424	2485	**13**
RIVERBANK AVE	1805	1861	**14**
RIZZO AVE	21306	21488	**22**
ROBERTS CT	4802	4863	**37**
ROBIN LN	4041	4095	**30**
ROCKHURST RD	17605	17896	**26**
ROCKHURST RD	17912	17994	**27**
ROLANDO AVE	16500	16577	**5**
ROLLINGHILLS CT	19249	19258	**36**
ROLLINGHILLS WAY	4725	4789	**36**
ROSALEE CT	3704	3754	**10**
ROTHMAN CT	5509	5518	**39**
ROXY WAY	3930	3968	**20**
RUBY ST	22419	22490	**23, 24**
RUSTIC DR			**21**
RUTLEDGE RD	20710	20901	**13**
SALEM RD	19649	19798	**29**
SAMSON WAY	3436	3452	**20**
SAN CARLOS AVE	2403	2580	**13**
SAN FRANCISCAN DR	17208	17499	**47**
SAN MIGUEL AVE	19105	19530	**19**
SAN MIGUEL AVE	19543	20185	**20**
SAN MIGUEL AVE	20185	21029	**21**
SAN MIGUEL AVE	21052	21197	**22**
SAN SIMEON PL	5313	5387	**42**
SANDY RD	18772	18996	**28**
SANTA MARIA AVE	18887	18931	**18**
SANTA MARIA AVE	18936	19435	**19**
SANTA MARIA AVE	19465	20235	**20**
SANTA MARIA AVE	20262	20677	**21**
SANTA MARIA CT	3650	3676	**20**
SANTOS AMARO PL	4423	4447	**8**
SAPPHIRE ST	19941	20329	**37**
SARGENT AVE	4402	4531	**29**
SARGENT AVE	4536	4596	**36**
SCHLOSSER CT	4620	4636	**28**

Street Name	From	To	Page No
SCHOOL WAY	4430	4470	**17**
SCHUSTER AVE	19004	19068	**10**
SCHUSTER AVE	19074	19135	**11**
SEAVIEW AVE	4826	4928	**26**
SEAVIEW AVE	5202	5247	**34**
SELBY DR	16563	16886	**5**
SEPTEMBER CT	3718	3730	**2**
SEPTEMBER CT	3719	3743	**9**
SEVEN HILLS RD	3440	3845	**10**
SEVEN HILLS RD	3900	4348	**18**
SEVEN HILLS RD	4359	4848	**27**
SEVEN HILLS RD	4483	4975	**28**
SEVERINI LN	2911	2915	**4**
SHADOW CREEK CIR	19990	20044	**42**
SHADOW RIDGE DR	5614	5780	**40**
SHADOW RIDGE DR	5638	5780	**44**
SHADOW RIDGE DR	5786	5862	**39**
SHADOW RIDGE DR	5792	5896	**55**
SHADYSPRING RD	21611	21707	**15**
SHADYSPRING RD	21682	21779	**23**
SHAMROCK WAY	4253	4320	**29**
SHAMROCK WAY	4325	4362	**36**
SHAUNA CT	4800	4824	**36**
SHEFFIELD PL	2721	2760	**3**
SHEFFIELD RD	18571	18674	**3**
SHELDON CT	20159	20194	**37**
SHERMAN DR	20874	20954	**72**
SHERMAN DR	20958	21062	**71**
SHERMAN DR	21051	21074	**62**
SHERWOOD CT	18376	18384	**10**
SILVER FOX PL	19102	19134	**4**
SIMSBURY RD	19144	19155	**11**
SKARLATOS PL	4609	4614	**18**
SKYFARM DR	5951	5980	**47**
SKYFARM DR	5981	6200	**48**
SLOPEVIEW CT	6000	6098	**47**
SOLITAIRE CT	19420	19450	**28**

A-7

Street Name	From	To	Page No
SOMERSET AVE	2362	2616	**5**
SOMERSET AVE	2611	3369	**12**
SOMERSET AVE	3375	3997	**20**
SOMERSET AVE	4010	4231	**29**
SONTURA CT	5476	5493	**40**
SORANI CT	17891	17907	**17**
SORANI WAY	4711	4806	**17**
SPRAGUE CT	19750	19802	**12**
SPRINGBROOK LN	16587	16695	**49**
SPRUCE ST	19701	19733	**29**
SPYGLASS CT	3654	3703	**11**
SPYGLASS CT	3710	3711	**19**
STANFIELD CT	16759	16784	**49**
STANFORD AVE	4410	4492	**18**
STANTON AVE	18570	18656	**3**
STANTON AVE	18631	19250	**4**
STANTON AVE	19249	19542	**5**
STANTON AVE	19458	20047	**12**
STANTON AVE	20047	20622	**13**
STANTON HEIGHTS CT	2710	2764	**4**
STANTON HILL CT	20033	20067	**13**
STANTON HILL RD	2390	2406	**13**
STANTON PL	19362	19368	**5**
STAR AVE	2206	2394	**22**
STEIN WAY	4429	4429	**8**
STEVENS ST	3930	4073	**29**
STROBRIDGE AVE	1620	2069	**14**
STROBRIDGE AVE	2069	2091	**22**
SUGARBUSH LN	3969	3975	**9**
SUMMER PL	19540	19540	**20**
SUMMERCREST DR	19947	20668	**72**
SUMMERGLEN PL	19595	20581	**63, 72**
SUMMERGLEN TER			**72**
SUMMERHILL PL	7707	7749	**72**
SUMMEROINTE PL	7849	7891	**72**
SUMMERPARK PL	20367	20423	**72**
SUMMERRIDGE DR	19801	20147	**72**

Street Name	From	To	Page No
SUMMIT CT	18658	18691	**27**
SUN RIDGE CT	5660	5707	**40**
SUNNYSLOPE AVE	6016	6016	**61**
SUNNYSLOPE AVE	6421	6443	**60**
SUNSHINE PL	3109	3117	**3**
SUSAN LN	2909	2925	**12**
SWALLOW CT	3606	3691	**10**
SWEET LN	21259	21303	**14**
SWEETBRIAR PL	17764	17772	**17**
SYDNEY CIR	18726	18971	**4**
SYDNEY WAY	2718	2995	**4**
SYDNEY WAY	2780	3224	**3**
SYDNEY WAY	3232	3388	**10**
TALBOT LN	2700	2790	**4**
TAMERA LN	3770	3782	**10**
TANGLEWOOD DR	21401	21552	**22**
TANGLEWOOD DR	21552	21895	**23**
TEELING CT	3520	3535	**20**
TEELING WAY	3540	3555	**20**
TERRY CT	3115	3185	**3**
TERRY CT	3190	3199	**10**
TERRY WAY	18402	18473	**3**
THERESA CT	2857	2878	**31**
THORNBURY AVE	18920	18945	**18**
THORNBURY AVE	18952	18992	**19**
THOUSAND OAKS DR	5710	5797	**47**
THOUSAND OAKS DR	5729	5757	**33**
TIMCO CT	3501	3590	**37**
TIMCO WAY	21112	21528	**37**
TINDER CT	5455	5477	**40**
TITAN PL	18785	18789	**4**
TITAN WAY	2512	2572	**4**
TODD CT	2981	3066	**11**
TODDIKA LN	4101	4131	**29**
TOPAZ CT	20022	20023	**29**
TOPAZ CT	20056	20079	**30**
TOTTEN ST	2661	2668	**31**

Street Name	From	To	Page No
TOYON PL	4163	4172	**43**
TRAILSIDE CT	5575	5600	**45**
TREE LN	5656	5761	**45**
TRENTON DR	17875	17923	**27**
TROOST CT	5470	5478	**40**
TRUMPET CT	5445	5470	**41**
TUXEDO CT	20700	20707	**42**
TYEE CT	21112	21156	**14**
TYEE ST	21235	21345	**14**
TYLER CT	5216	5235	**26**
TYLER LN	4998	5042	**26**
TYLER LN	5031	5041	**27**
VANNOY AVE	4903	4921	**28**
VANNOY AVE	4920	5149	**35**
VANNOY CT	19016	19054	**35**
VAUGHN AVE	18951	18962	**18**
VAUGHN AVE	18967	19528	**19**
VAUGHN AVE	19541	19646	**20**
VEGAS AVE	2201	2493	**22**
VEGAS AVE	2515	2698	**31**
VERGIL CT	2666	2673	**31**
VERGIL ST	21910	22094	**31**
VERNETTI WY	21895	21931	**31**
VERNON CT	18448	18472	**18**
VERONICA AVE	4116	4203	**30**
VERONICA AVE	4208	4351	**37**
VESTAL AVE	2137	2362	**23**
E VIEW CT	5559	5575	**41**
VIEW POINT RD	20437	20481	**45**
VILLAGE DR	3389	3389	**21**
VILLAREAL DR			**62, 63, 72**
VILLAREAL DR			**45, 46, 61**
VILLAREAL DR	7320	7580	**63**
VINCENT CT	3803	3834	**30**
VINE CT	4301	4314	**9**
VINE CT	4306	4309	**17**
VINEYARD RD	17409	17447	**8**

Street Name	From	To	Page No
VINEYARD RD	17447	18539	**9**
VINEYARD RD	18539	18857	**10**
VIVIAN ST	2020	2060	**22**
WALKER CT	21156	21196	**22**
WALKER CT	21157	21197	**14**
WALNUT RD	17552	18036	**17**
WALNUT RD	17643	18701	**9**
WALNUT RD	18701	18951	**10**
WATERFORD PL	20111	20881	**42**
WATSON ST	2513	2696	**31**
WATTERS CT	4306	4319	**18**
WATTERS DR	18400	18520	**18**
WESTBURY RD	3960	3982	**18**
WESTBURY RD	3973	3987	**19**
WHISPER LN	17611	17699	**17**
WHISPERING PINE CT	5771	5776	**47**
WICKS LN	5038	5059	**26**
WILBEAM AVE	20845	21059	**21**
WILBEAM AVE	21048	21181	**22**
WILBEAM CT	3322	3322	**21**
WILDROSE LN	5200	5212	**34**
WILDWOOD PL	4311	4355	**8**
WILLOW GLEN PL	5320	5353	**25**
WILSON AVE	3809	4180	**19**
WINIFRED DR	5216	5295	**35**
WINTERGREEN PL	4441	4453	**8**
WISTERIA LN	2930	2992	**12**
WISTERIA ST	19790	20241	**12**
WISTERIA ST	20317	20585	**13**
WITCHER ST	3125	3141	**12**
WITCHER ST	3157	3157	**20**
WOODBINE AVE	20102	20245	**20**
WOODBINE AVE	20269	20343	**21**
WOODSIDE WAY	20756	20772	**30**
WOOSTER CT	6630	6687	**63**
WYNDALE CT	18375	18392	**10**
WYNDALE DR	3415	3471	**10**

Street Name	From	To	Page No
XENIE CT	19418	19586	**28**
YAFFE DR	2405	2499	**05**
YEANDLE AVE	20227	20650	**30**
YOUNG AVE	22003	22091	**31**
YOUNG AVE	22096	22096	**32**
YUMA ST	19416	19562	**5**
ZACK WAY			**29**
ZENO ST	19755	19891	**05**
ZENO ST	19780	19995	**12**
ZENO ST	20013	20024	**13**

Street Name	From	To	Page No

A-9

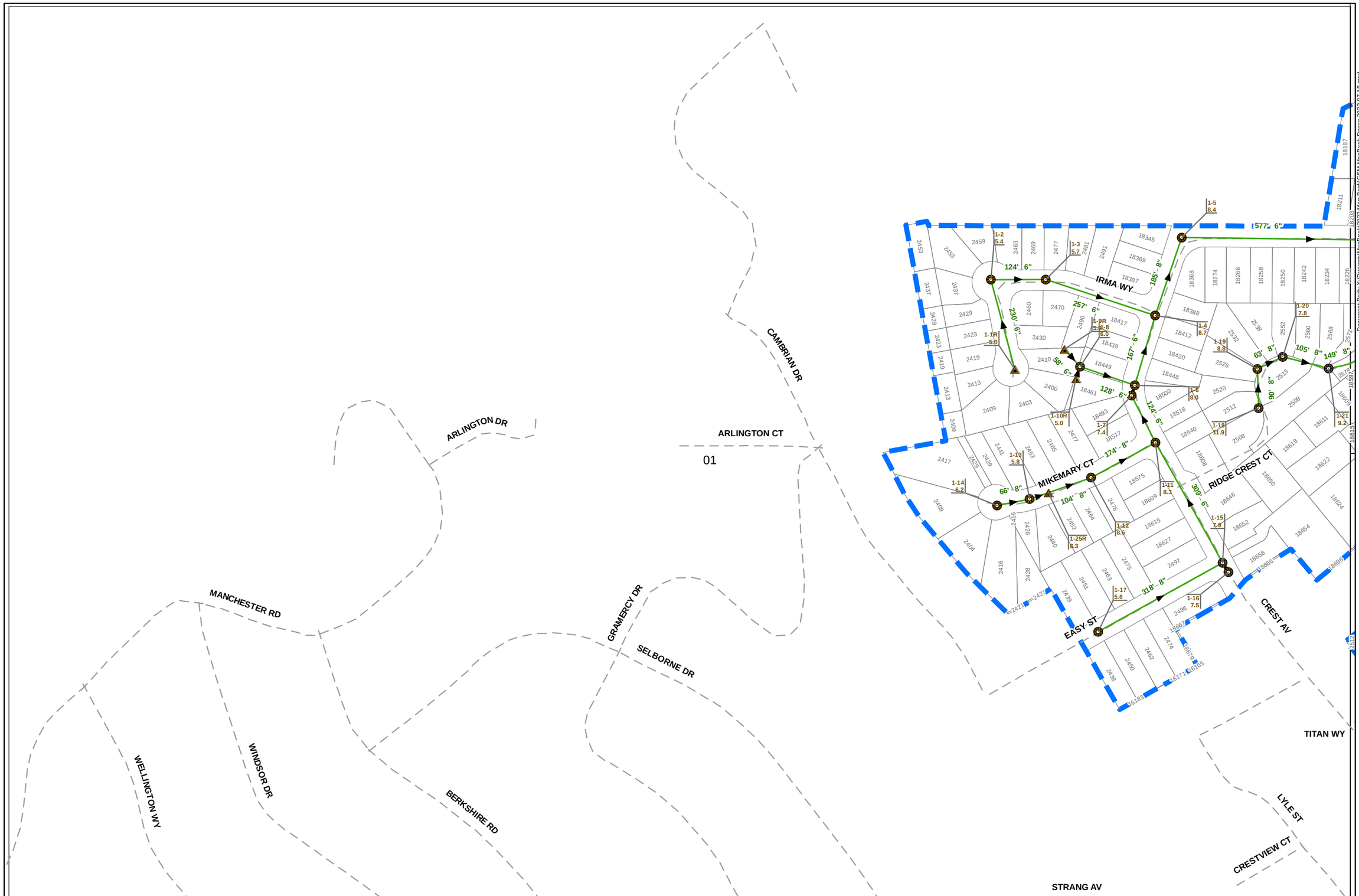

REV.

M. LEE
CVSan

Revision July 2022

Document Path: X:\Projects\MapBook\2022 Map Book\CSM MapBook Pages 2022-07-18.mxd

N

CASTRO VALLEY SANITARY DISTRICT SEWER SYSTEM FACILITIES

GRAPHIC SCALE
0 100 200 300

Scale:
1" = 200'

		02
	01	03
		04

01

THE CASTRO VALLEY SANITARY DISTRICT ASSUMES NO LIABILITY FOR ERRORS OR OMISSIONS FOR UTILITY INFORMATION SHOWN ON THESE MAPS. ALL INFORMATION SHOULD BE FIELD VERIFIED.

REV.

M. LEE
CVSan

Revision
July 2022

Document Path: X:\Projects\MapBook\2022 Map Book\CSM MapBook Pages 2022-07-18.mxd

N

CASTRO VALLEY SANITARY DISTRICT
SEWER SYSTEM FACILITIES

GRAPHIC SCALE
0 100 200 300

Scale:
1"= 200'

		08
	02	09
01	03	10

02

THE CASTRO VALLEY SANITARY DISTRICT ASSUMES NO LIABILITY FOR ERRORS OR OMISSIONS FOR UTILITY INFORMATION SHOWN ON THESE MAPS. ALL INFORMATION SHOULD BE FIELD VERIFIED.

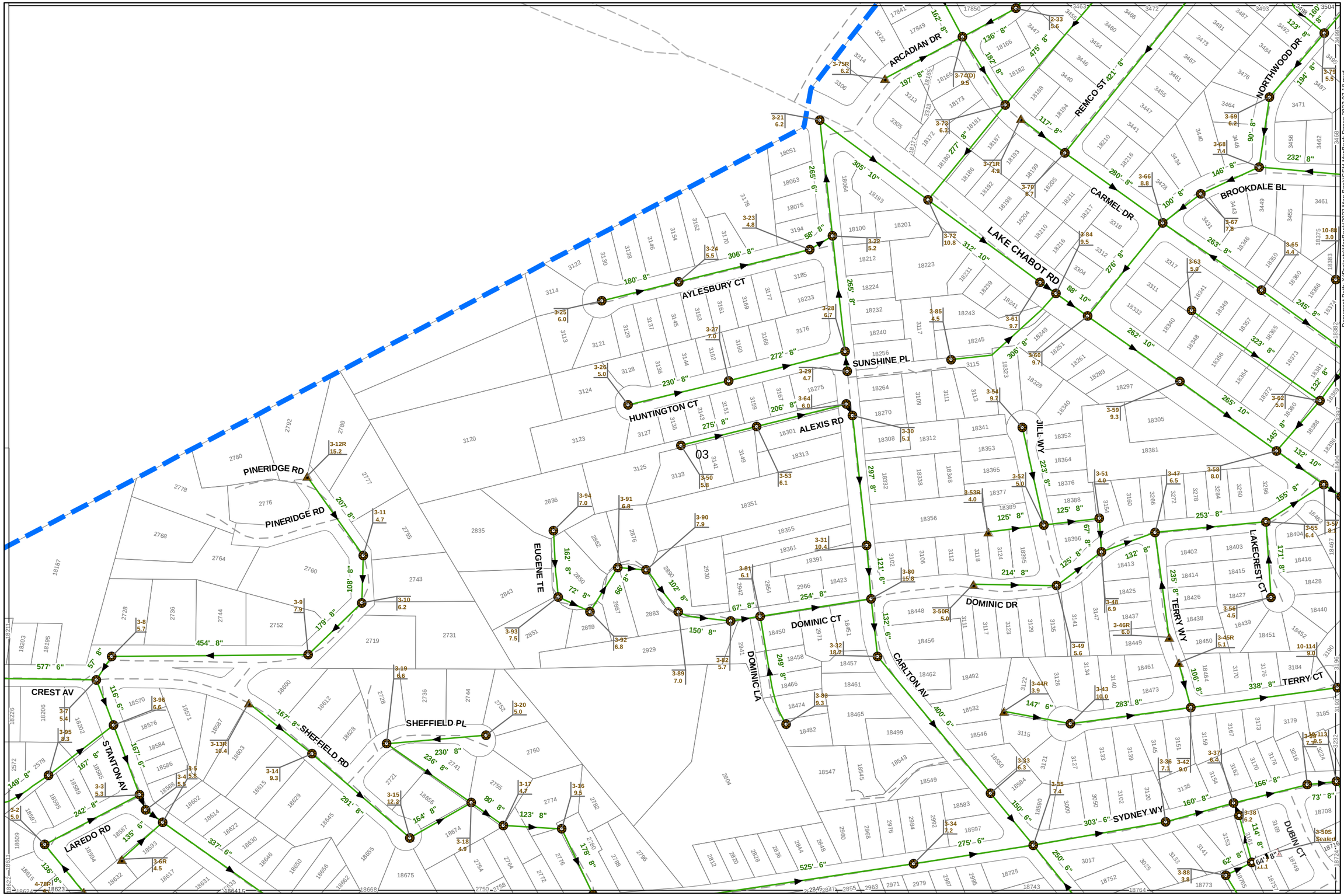

REV.

M. LEE
CVSan

Revision
July 2022

Document Path: X:\Projects\MapBook\2022 Map Book\CSM MapBook Pages 2022-07-18.mxd

N

CASTRO VALLEY SANITARY DISTRICT
SEWER SYSTEM FACILITIES

GRAPHIC SCALE
0 100 200 300

Scale:
1" = 200'

	02	09
01	03	10
	04	11

03

THE CASTRO VALLEY SANITARY DISTRICT ASSUMES NO LIABILITY FOR ERRORS OR OMISSIONS FOR UTILITY INFORMATION SHOWN ON THESE MAPS. ALL INFORMATION SHOULD BE FIELD VERIFIED.

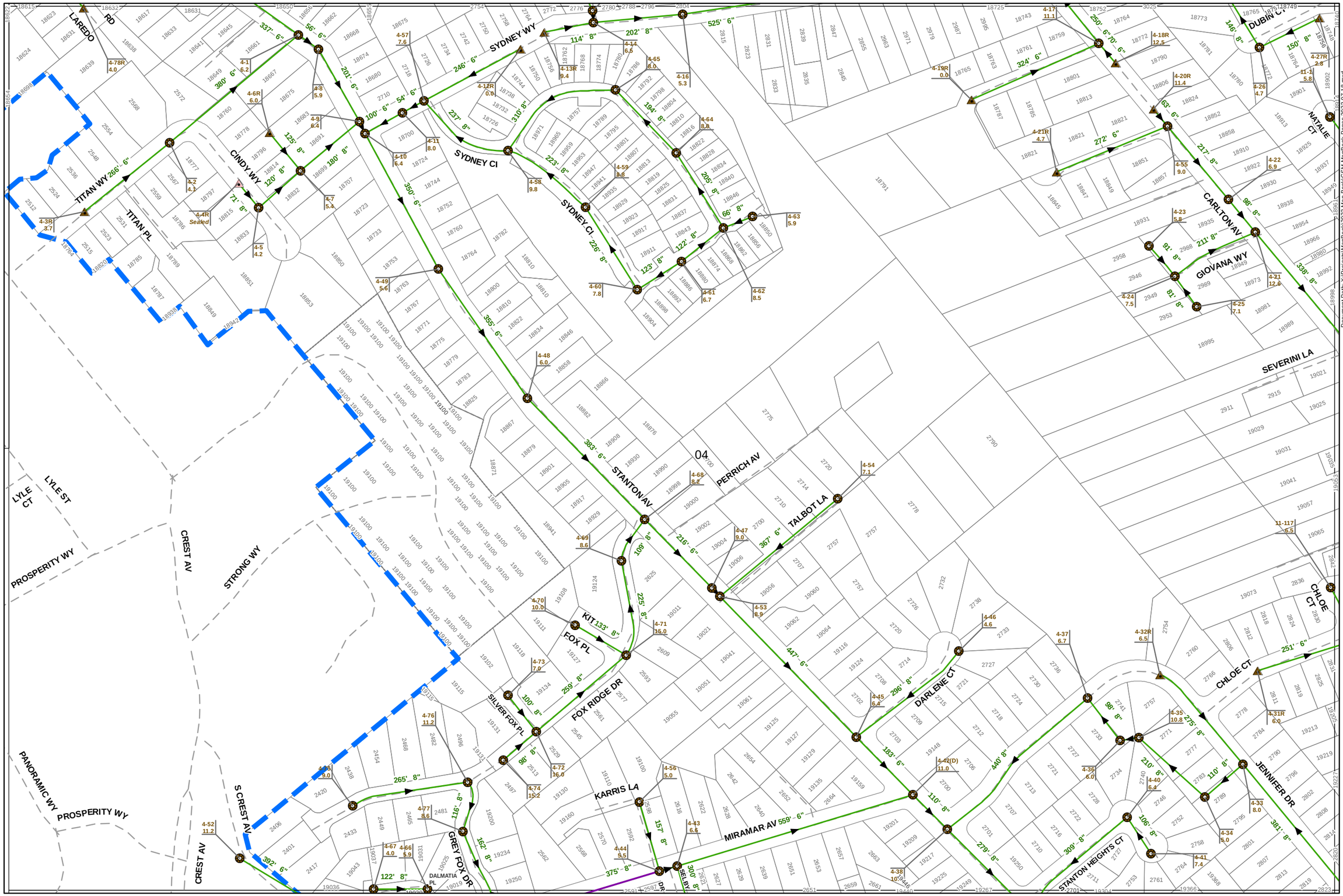

REV.

M. LEE
CVSan

Revision July 2022

Document Path: X:\Projects\MapBook\2022 Map Book\CSM MapBook Pages 2022-07-18.mxd

N

CASTRO VALLEY SANITARY DISTRICT SEWER SYSTEM FACILITIES

GRAPHIC SCALE 0 100 200 300

Scale: 1"= 200'

01	03	10
	04	11
	05	12

04

THE CASTRO VALLEY SANITARY DISTRICT ASSUMES NO LIABILITY FOR ERRORS OR OMISSIONS FOR UTILITY INFORMATION SHOWN ON THESE MAPS. ALL INFORMATION SHOULD BE FIELD VERIFIED.

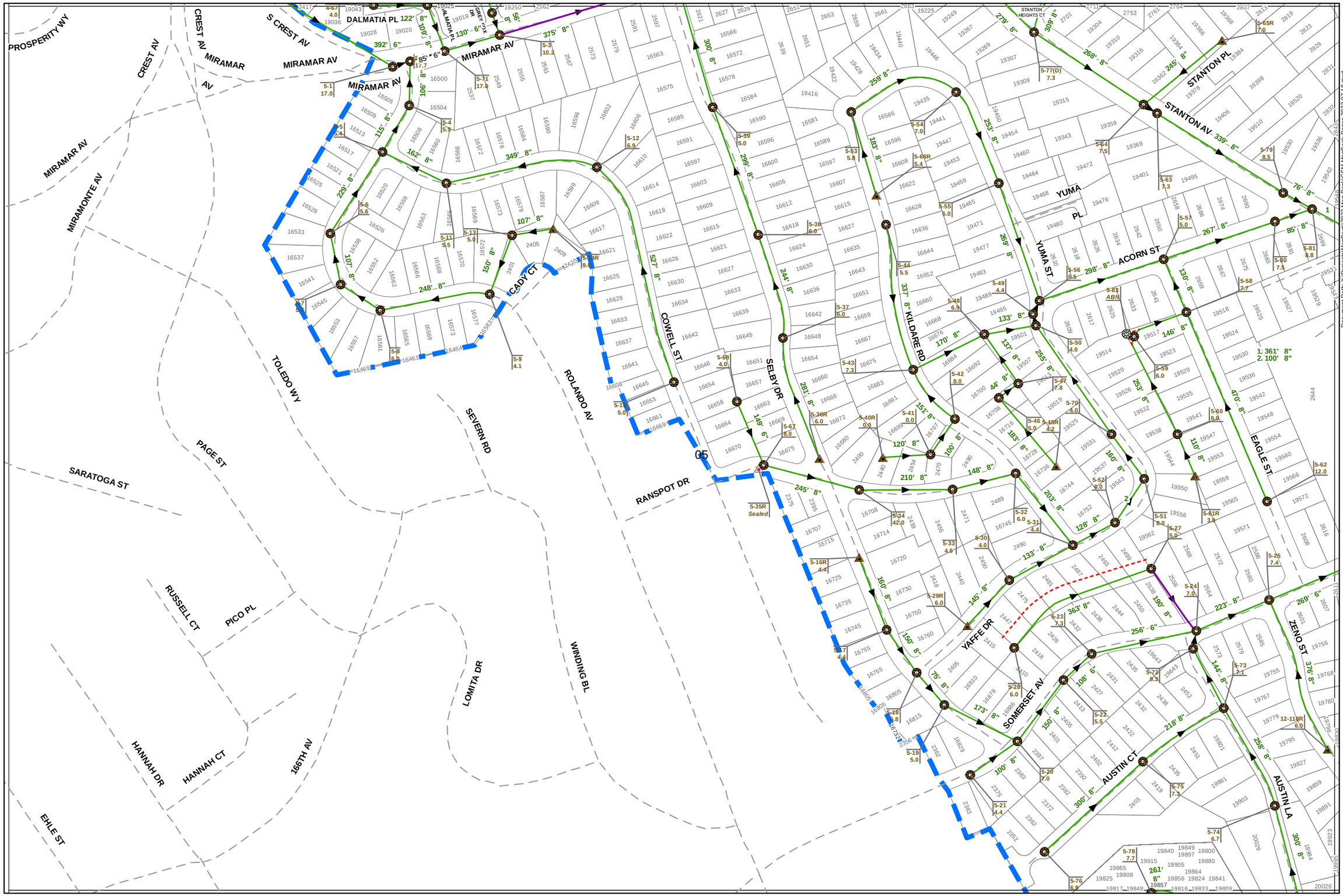

REV.

M. LEE
CVSan

Revision July 2022

Document Path: X:\Projects\MapBook\2022 Map Book\CSM MapBook Pages 2022-07-18.mxd

N

CASTRO VALLEY SANITARY DISTRICT
SEWER SYSTEM FACILITIES

GRAPHIC SCALE
0 100 200 300

Scale:
1" = 200'

04	11
05	12
06	13

05

THE CASTRO VALLEY SANITARY DISTRICT ASSUMES NO LIABILITY FOR ERRORS OR OMISSIONS FOR UTILITY INFORMATION SHOWN ON THESE MAPS. ALL INFORMATION SHOULD BE FIELD VERIFIED.

REV.

M. LEE
CVSan

Revision July 2022

N

CASTRO VALLEY SANITARY DISTRICT SEWER SYSTEM FACILITIES

GRAPHIC SCALE
0 100 200 300

Scale:
1"= 200'

	05	12
	06	13
	07	14

06

THE CASTRO VALLEY SANITARY DISTRICT ASSUMES NO LIABILITY FOR ERRORS OR OMISSIONS FOR UTILITY INFORMATION SHOWN ON THESE MAPS. ALL INFORMATION SHOULD BE FIELD VERIFIED.

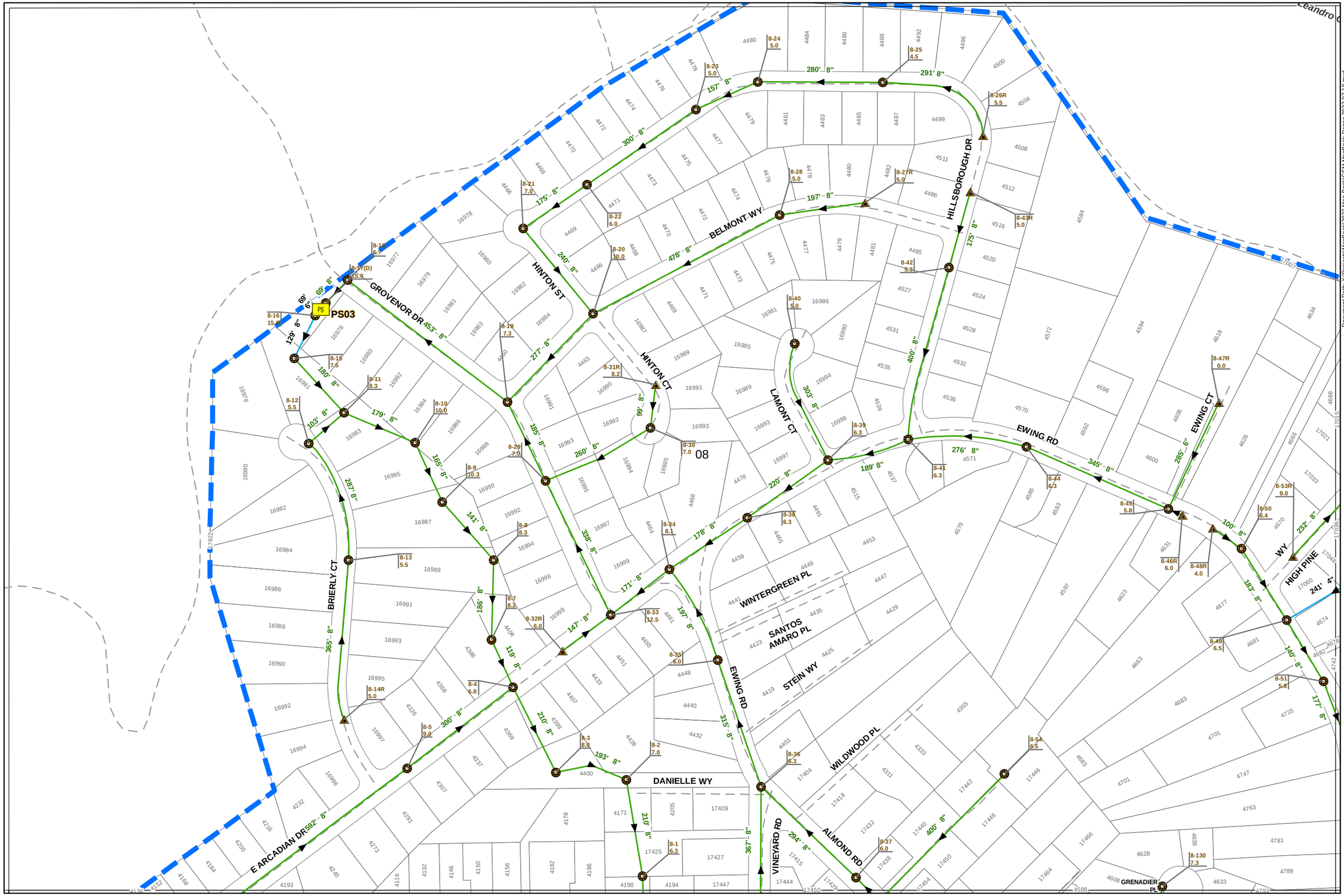

REV.

M. LEE
CVSan

Revision July 2022

Document Path: X:\Projects\MapBook\2022 Map Book\CSM MapBook Pages 2022-07-18.mxd

N

CASTRO VALLEY SANITARY DISTRICT SEWER SYSTEM FACILITIES

GRAPHIC SCALE

0 100 200 300

Scale: 1" = 200'

	08	16
02	09	17

08

THE CASTRO VALLEY SANITARY DISTRICT ASSUMES NO LIABILITY FOR ERRORS OR OMISSIONS FOR UTILITY INFORMATION SHOWN ON THESE MAPS. ALL INFORMATION SHOULD BE FIELD VERIFIED.

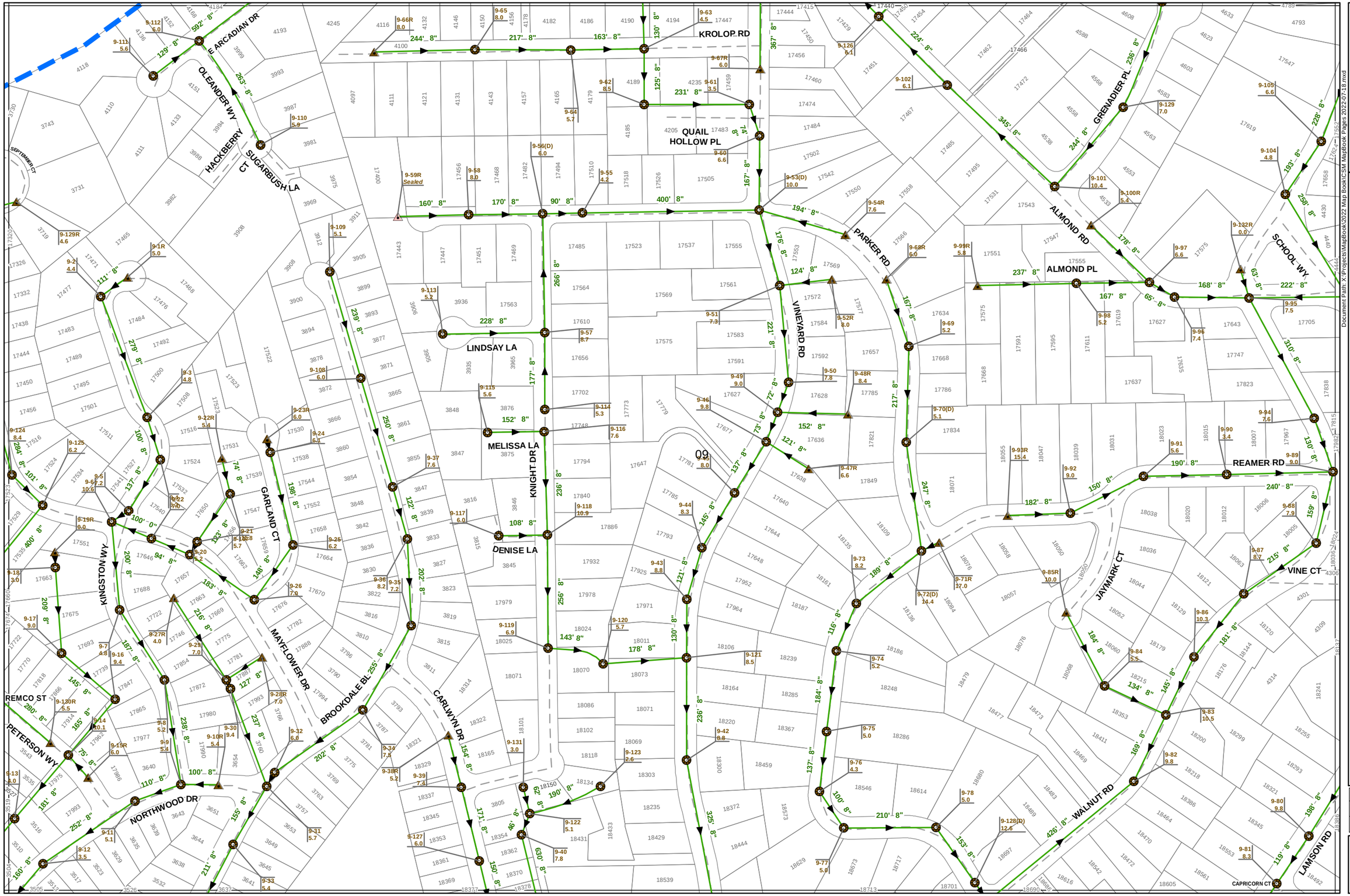

REV.

M. LEE
CVSan

Revision July 2022

Document Path: X:\Projects\MapBook\2022 Map Book\CSM MapBook Pages 2022-07-18.mxd

N

CASTRO VALLEY SANITARY DISTRICT
SEWER SYSTEM FACILITIES

GRAPHIC SCALE 0 100 200 300

Scale: 1"= 200'

	08	16
02	09	17
03	10	18

09

THE CASTRO VALLEY SANITARY DISTRICT ASSUMES NO LIABILITY FOR ERRORS OR OMISSIONS FOR UTILITY INFORMATION SHOWN ON THESE MAPS. ALL INFORMATION SHOULD BE FIELD VERIFIED.

REV.

M. LEE
CVSan

Revision July 2022

Document Path: X:\Projects\MapBook\2022 Map Book\CSM MapBook Pages 2022-07-18.mxd

N

CASTRO VALLEY SANITARY DISTRICT SEWER SYSTEM FACILITIES

GRAPHIC SCALE 0 100 200 300

Scale: 1" = 200'

02	09	17
03	10	18
04	11	19

10

THE CASTRO VALLEY SANITARY DISTRICT ASSUMES NO LIABILITY FOR ERRORS OR OMISSIONS FOR UTILITY INFORMATION SHOWN ON THESE MAPS. ALL INFORMATION SHOULD BE FIELD VERIFIED.

REV.

M. LEE
CVSan

Revision July 2022

Document Path: X:\Projects\MapBook\2022 Map Book\CSM MapBook Pages 2022-07-18.mxd

N

CASTRO VALLEY SANITARY DISTRICT
SEWER SYSTEM FACILITIES

GRAPHIC SCALE 0 100 200 300

Scale: 1"= 200'

03	10	18
04	11	19
05	12	20

11

THE CASTRO VALLEY SANITARY DISTRICT ASSUMES NO LIABILITY FOR ERRORS OR OMISSIONS FOR UTILITY INFORMATION SHOWN ON THESE MAPS. ALL INFORMATION SHOULD BE FIELD VERIFIED.

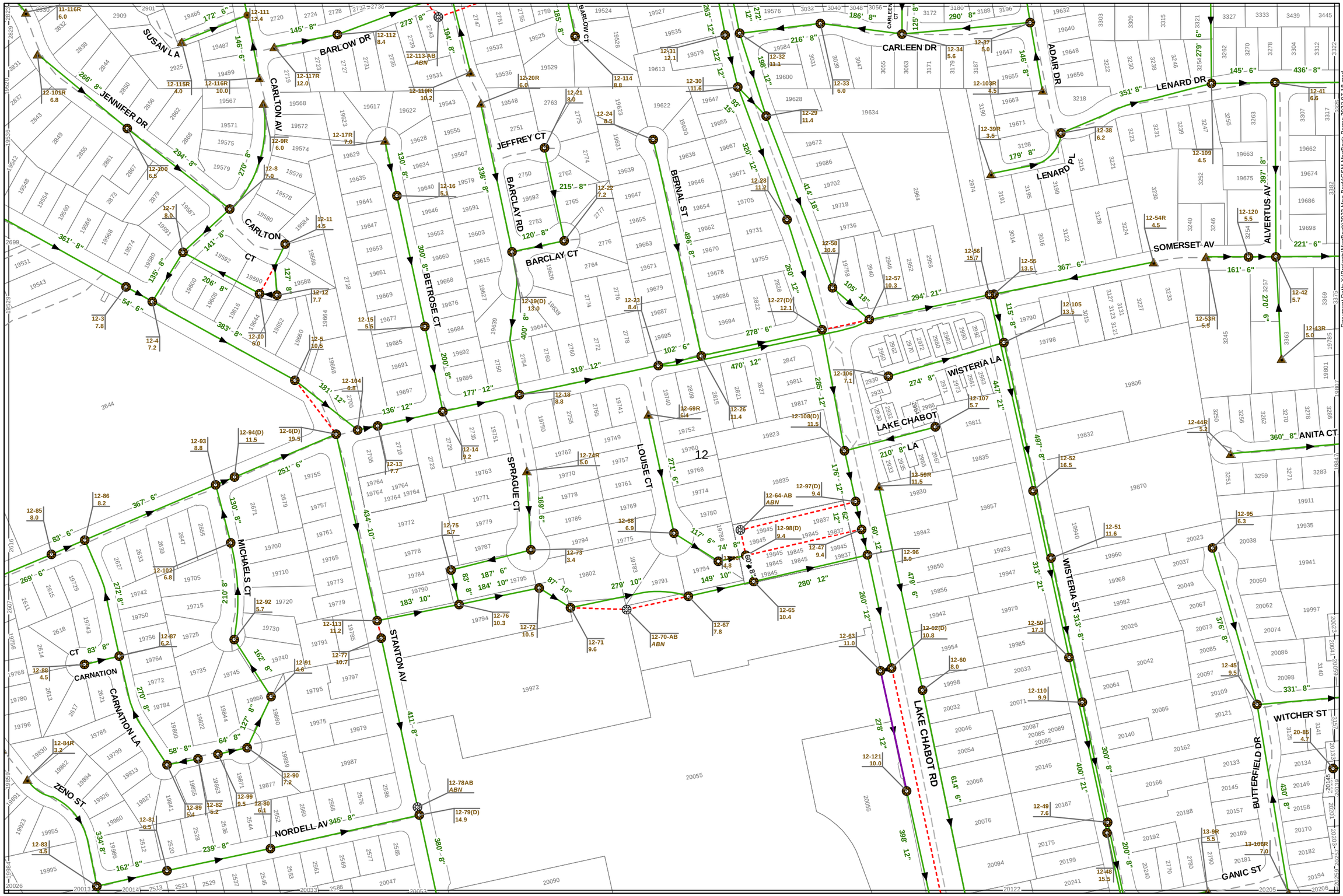

REV.

M. LEE
CVSan

Revision July 2022

Document Path: X:\Projects\MapBook\2022 Map Book\CSM MapBook Pages 2022-07-18.mxd

N

CASTRO VALLEY SANITARY DISTRICT SEWER SYSTEM FACILITIES

GRAPHIC SCALE 0 100 200 300

Scale: 1"= 200'

04	11	19
05	12	20
06	13	21

12

THE CASTRO VALLEY SANITARY DISTRICT ASSUMES NO LIABILITY FOR ERRORS OR OMISSIONS FOR UTILITY INFORMATION SHOWN ON THESE MAPS. ALL INFORMATION SHOULD BE FIELD VERIFIED.

REV.

M. LEE
CVSan

Revision July 2022

Document Path: X:\Projects\MapBook\2022 Map Book\CSM MapBook Pages 2022-07-18.mxd

N

CASTRO VALLEY SANITARY DISTRICT SEWER SYSTEM FACILITIES

GRAPHIC SCALE 0 100 200 300

Scale: 1" = 200'

05	12	20
06	13	21
07	14	22

13

THE CASTRO VALLEY SANITARY DISTRICT ASSUMES NO LIABILITY FOR ERRORS OR OMISSIONS FOR UTILITY INFORMATION SHOWN ON THESE MAPS. ALL INFORMATION SHOULD BE FIELD VERIFIED.

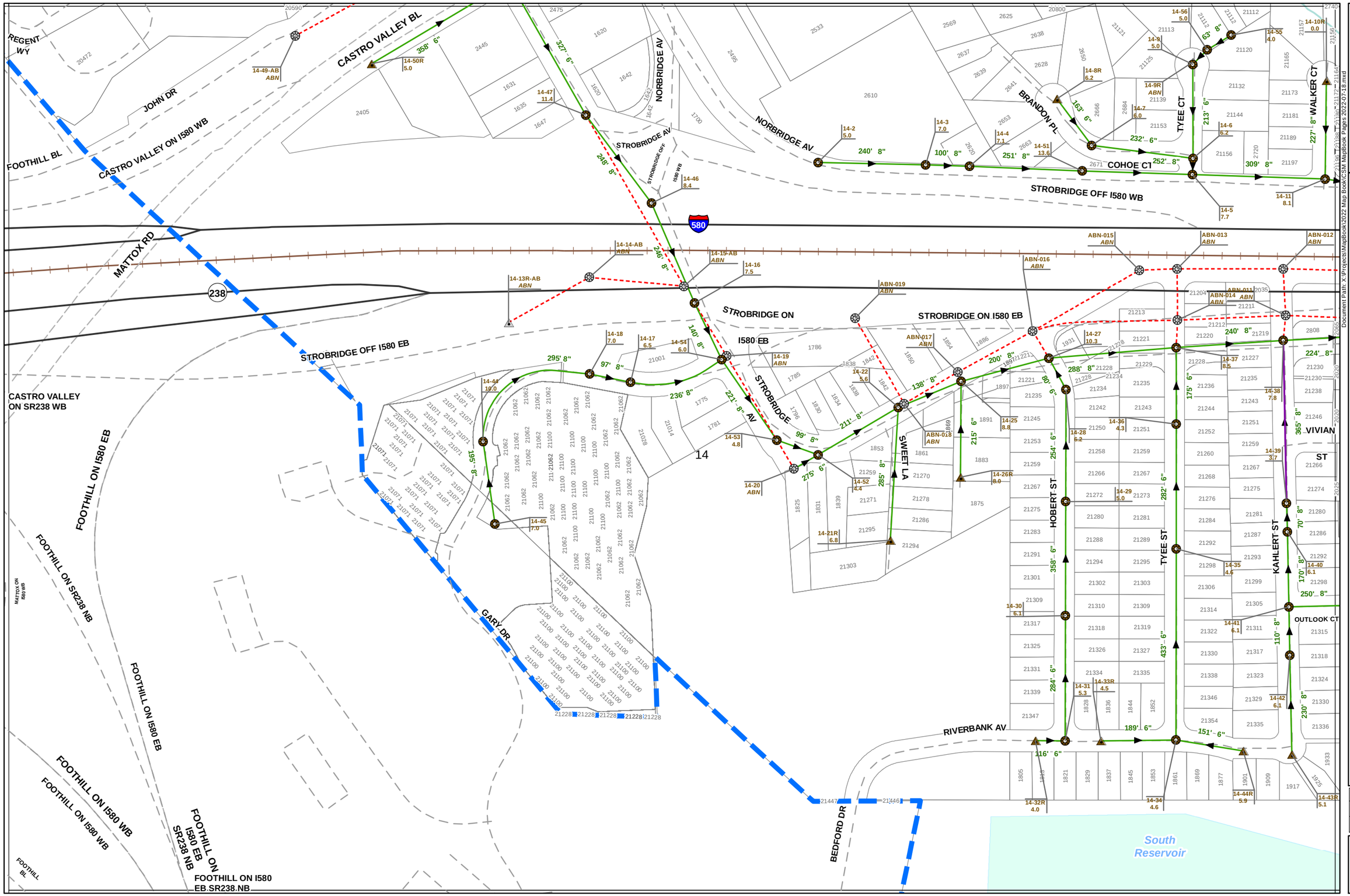

REV.

M. LEE
CVSan

Revision July 2022

Document Path: X:\Projects\MapBook\2022 Map Book\CSM MapBook Pages 2022-07-18.mxd

N

CASTRO VALLEY SANITARY DISTRICT
SEWER SYSTEM FACILITIES

GRAPHIC SCALE 0 100 200 300

Scale: 1"= 200'

06	13	21
07	14	22
	15	23

14

THE CASTRO VALLEY SANITARY DISTRICT ASSUMES NO LIABILITY FOR ERRORS OR OMISSIONS FOR UTILITY INFORMATION SHOWN ON THESE MAPS. ALL INFORMATION SHOULD BE FIELD VERIFIED.

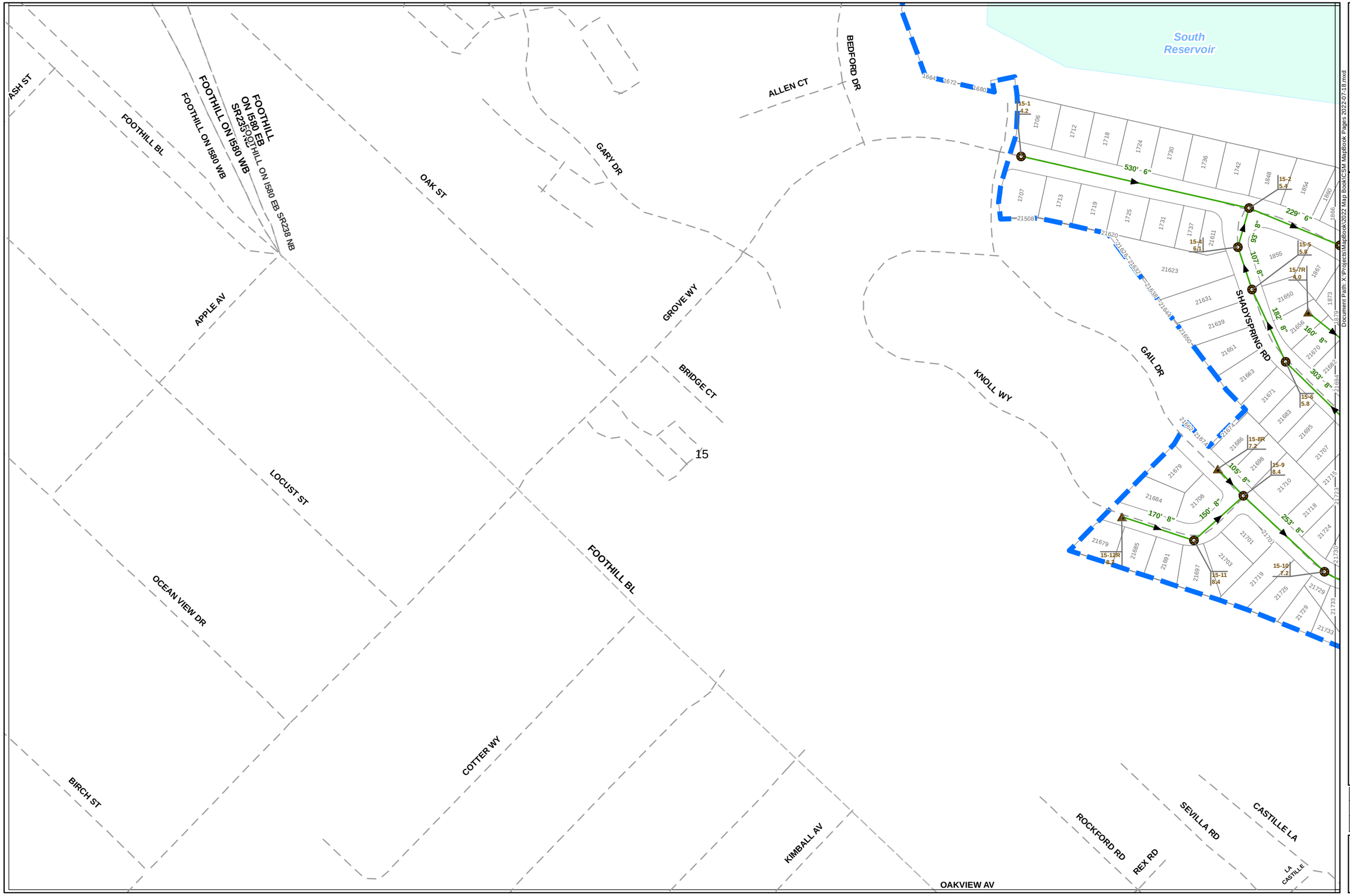

REV.

M. LEE
CVSan

Revision July 2022

Document Path: X:\Projects\MapBook\2022 Map Book\CSM MapBook Pages 2022-07-18.mxd

N

CASTRO VALLEY SANITARY DISTRICT
SEWER SYSTEM FACILITIES

GRAPHIC SCALE
0 100 200 300

Scale:
1"= 200'

07	14	22
	15	23
		24

15

THE CASTRO VALLEY SANITARY DISTRICT ASSUMES NO LIABILITY FOR ERRORS OR OMISSIONS FOR UTILITY INFORMATION SHOWN ON THESE MAPS. ALL INFORMATION SHOULD BE FIELD VERIFIED.

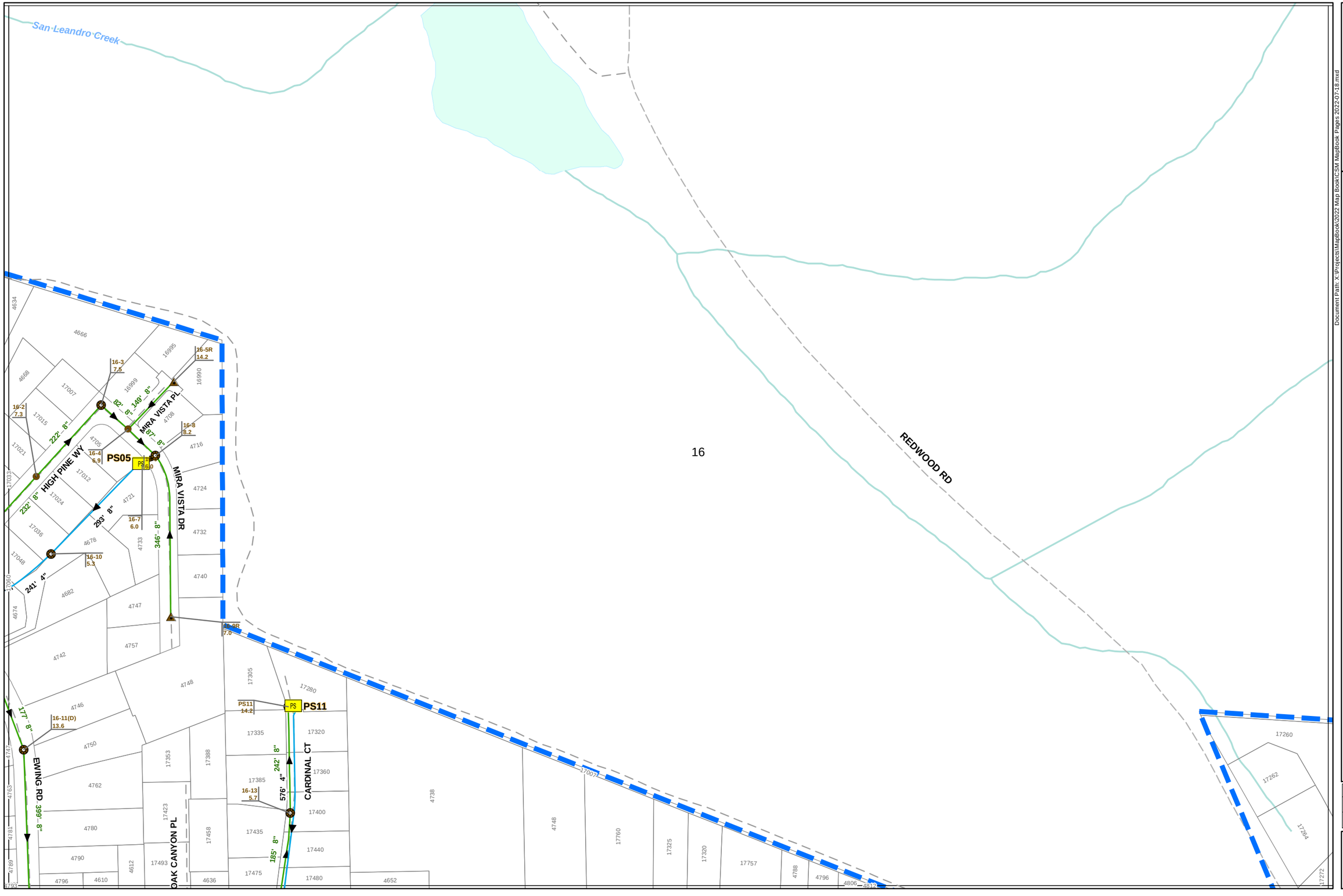

REV.

M. LEE
CVSan

Revision July 2022

Document Path: X:\Projects\MapBook\2022 Map Book\CSM MapBook Pages 2022-07-18.mxd

N

CASTRO VALLEY SANITARY DISTRICT
SEWER SYSTEM FACILITIES

GRAPHIC SCALE
0 100 200 300

Scale:
1"= 200'

08	16	25
09	17	26

16

THE CASTRO VALLEY SANITARY DISTRICT ASSUMES NO LIABILITY FOR ERRORS OR OMISSIONS FOR UTILITY INFORMATION SHOWN ON THESE MAPS. ALL INFORMATION SHOULD BE FIELD VERIFIED.

REV.

M. LEE
CVSan

Revision July 2022

Document Path: X:\Projects\MapBook\2022 Map Book\CSM MapBook Pages 2022-07-18.mxd

N

CASTRO VALLEY SANITARY DISTRICT SEWER SYSTEM FACILITIES

GRAPHIC SCALE 0 100 200 300

Scale: 1"= 200'

08	16	25
09	17	26
10	18	27

17

THE CASTRO VALLEY SANITARY DISTRICT ASSUMES NO LIABILITY FOR ERRORS OR OMISSIONS FOR UTILITY INFORMATION SHOWN ON THESE MAPS. ALL INFORMATION SHOULD BE FIELD VERIFIED.

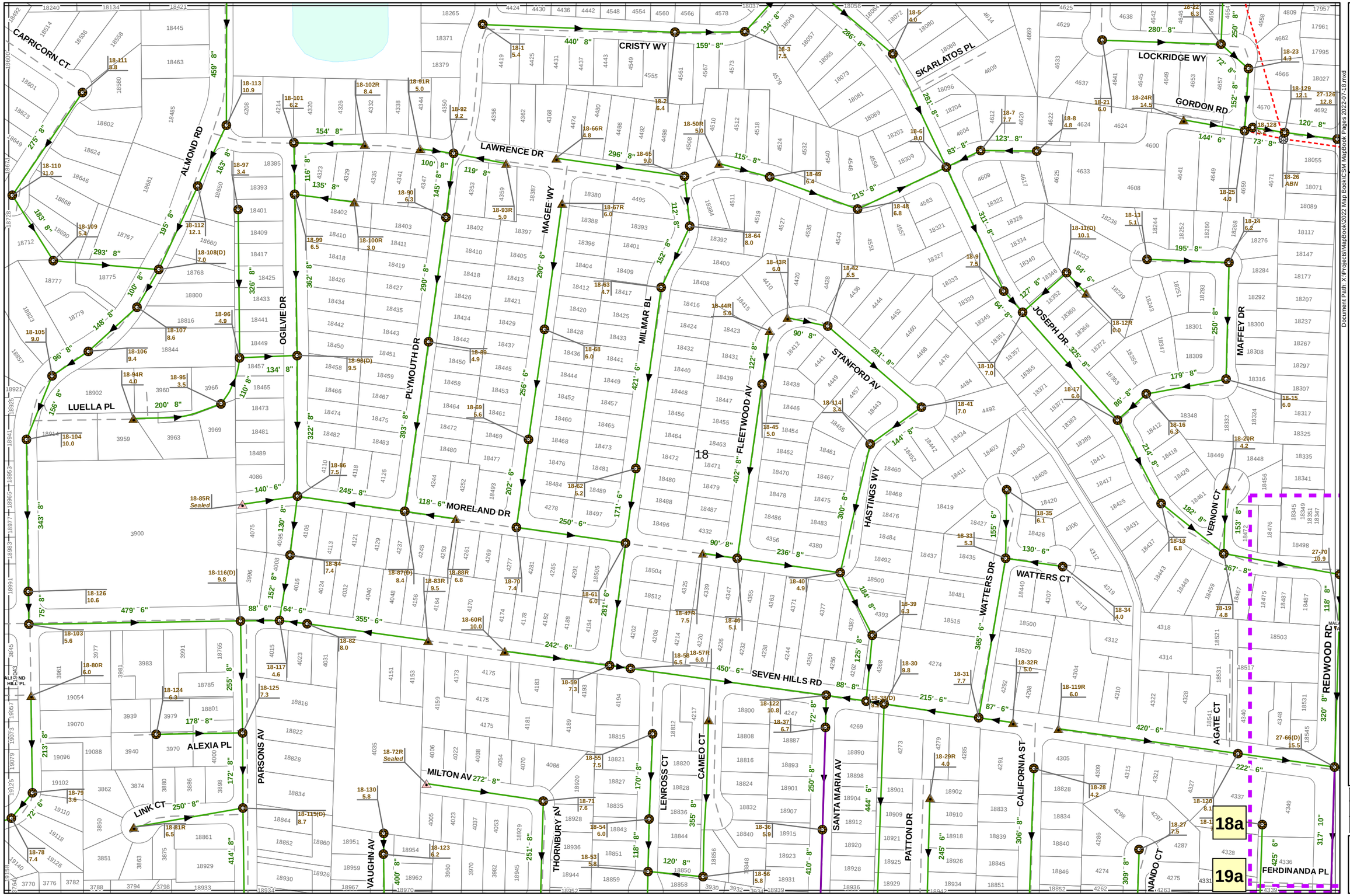

REV.

M. LEE
CVSan

Revision July 2022

Document Path: X:\Projects\MapBook\2022 Map Book\CSM MapBook Pages 2022-07-18.mxd

N

CASTRO VALLEY SANITARY DISTRICT SEWER SYSTEM FACILITIES

GRAPHIC SCALE 0 100 200 300

Scale: 1"= 200'

09	17	26
10	18	27
11	19	28

18

THE CASTRO VALLEY SANITARY DISTRICT ASSUMES NO LIABILITY FOR ERRORS OR OMISSIONS FOR UTILITY INFORMATION SHOWN ON THESE MAPS. ALL INFORMATION SHOULD BE FIELD VERIFIED.

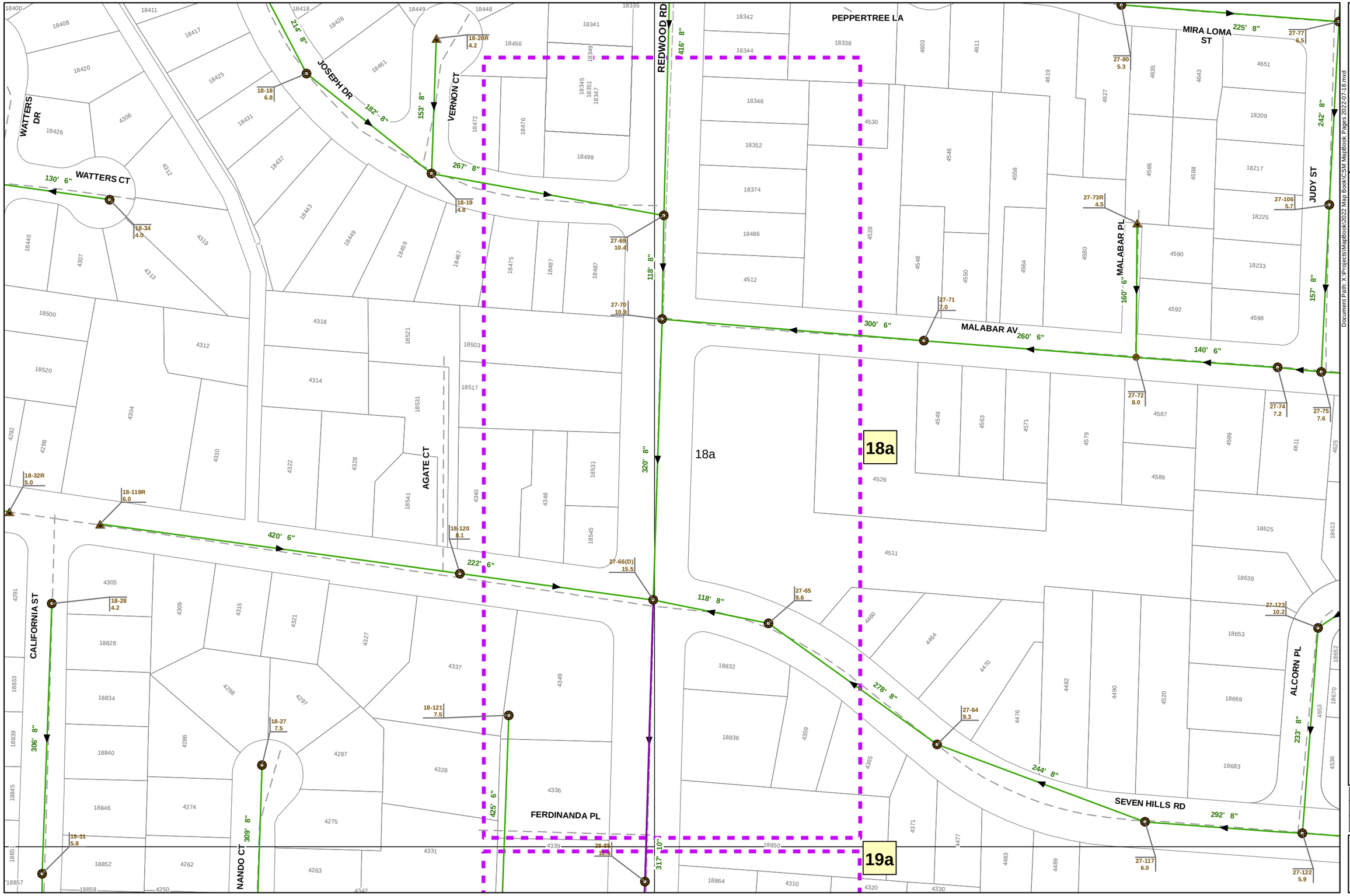

REV.

M. LEE
CVSan

Revision July 2022

Document Path: X:\Projects\MapBook\2022 Map Book\CSM MapBook Pages 2022-07-18.mxd

N

CASTRO VALLEY SANITARY DISTRICT
SEWER SYSTEM FACILITIES

GRAPHIC SCALE 0 100 200 300

Scale: 1"= 100'

18		27
18	18a	27
19		28

18a

THE CASTRO VALLEY SANITARY DISTRICT ASSUMES NO LIABILITY FOR ERRORS OR OMISSIONS FOR UTILITY INFORMATION SHOWN ON THESE MAPS. ALL INFORMATION SHOULD BE FIELD VERIFIED.

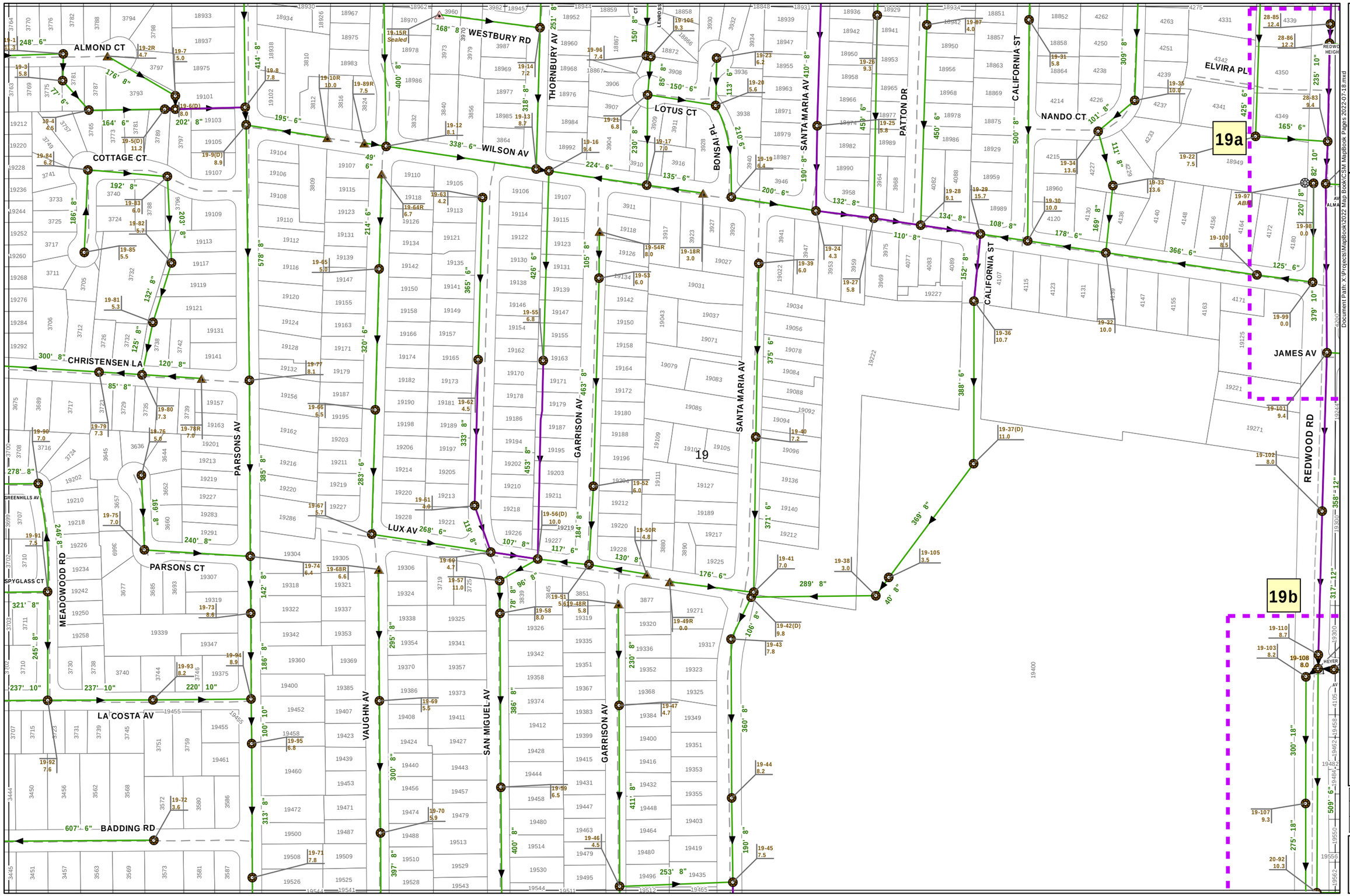

REV.

M. LEE
CVSan

Revision July 2022

Document Path: X:\Projects\MapBook\2022 Map Book\CSM MapBook Pages 2022-07-18.mxd

N

CASTRO VALLEY SANITARY DISTRICT SEWER SYSTEM FACILITIES

GRAPHIC SCALE 0 100 200 300

Scale: 1"= 200'

10	18	27
11	19	28
12	20	29

19

THE CASTRO VALLEY SANITARY DISTRICT ASSUMES NO LIABILITY FOR ERRORS OR OMISSIONS FOR UTILITY INFORMATION SHOWN ON THESE MAPS. ALL INFORMATION SHOULD BE FIELD VERIFIED.

REV.

M. LEE
CVSan

Revision July 2022

Document Path: X:\Projects\MapBook\2022 Map Book\CSM MapBook Pages 2022-07-18.mxd

N

CASTRO VALLEY SANITARY DISTRICT SEWER SYSTEM FACILITIES

GRAPHIC SCALE 0 100 200 300

Scale: 1"= 100'

18		27
19	19a	28
19		28

19a

THE CASTRO VALLEY SANITARY DISTRICT ASSUMES NO LIABILITY FOR ERRORS OR OMISSIONS FOR UTILITY INFORMATION SHOWN ON THESE MAPS. ALL INFORMATION SHOULD BE FIELD VERIFIED.

REV.

M. LEE
CVSan

Revision July 2022

Document Path: X:\Projects\MapBook\2022 Map Book\CSM MapBook Pages 2022-07-18.mxd

N

CASTRO VALLEY SANITARY DISTRICT SEWER SYSTEM FACILITIES

GRAPHIC SCALE 0 100 200 300

Scale: 1"= 100'

19		28
19	19b	28
20		29

19b

THE CASTRO VALLEY SANITARY DISTRICT ASSUMES NO LIABILITY FOR ERRORS OR OMISSIONS FOR UTILITY INFORMATION SHOWN ON THESE MAPS. ALL INFORMATION SHOULD BE FIELD VERIFIED.

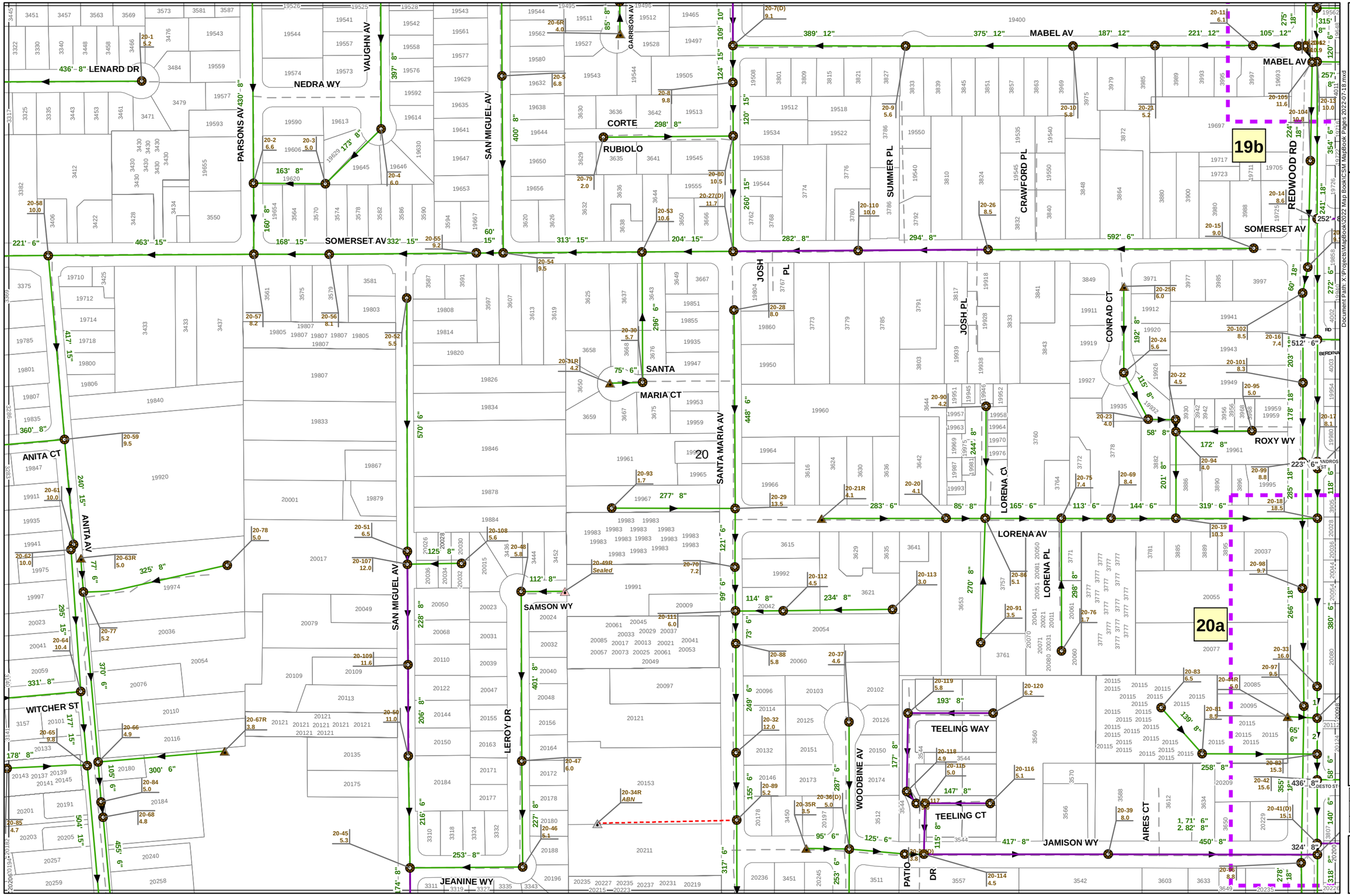

REV.

M. LEE
CVSan

Revision July 2022

Document Path: X:\Projects\MapBook\2022 Map Book\CSM MapBook Pages 2022-07-18.mxd

N

CASTRO VALLEY SANITARY DISTRICT SEWER SYSTEM FACILITIES

GRAPHIC SCALE 0 100 200 300

Scale: 1"= 200'

11	19	28
12	20	29
13	21	30

20

THE CASTRO VALLEY SANITARY DISTRICT ASSUMES NO LIABILITY FOR ERRORS OR OMISSIONS FOR UTILITY INFORMATION SHOWN ON THESE MAPS. ALL INFORMATION SHOULD BE FIELD VERIFIED.

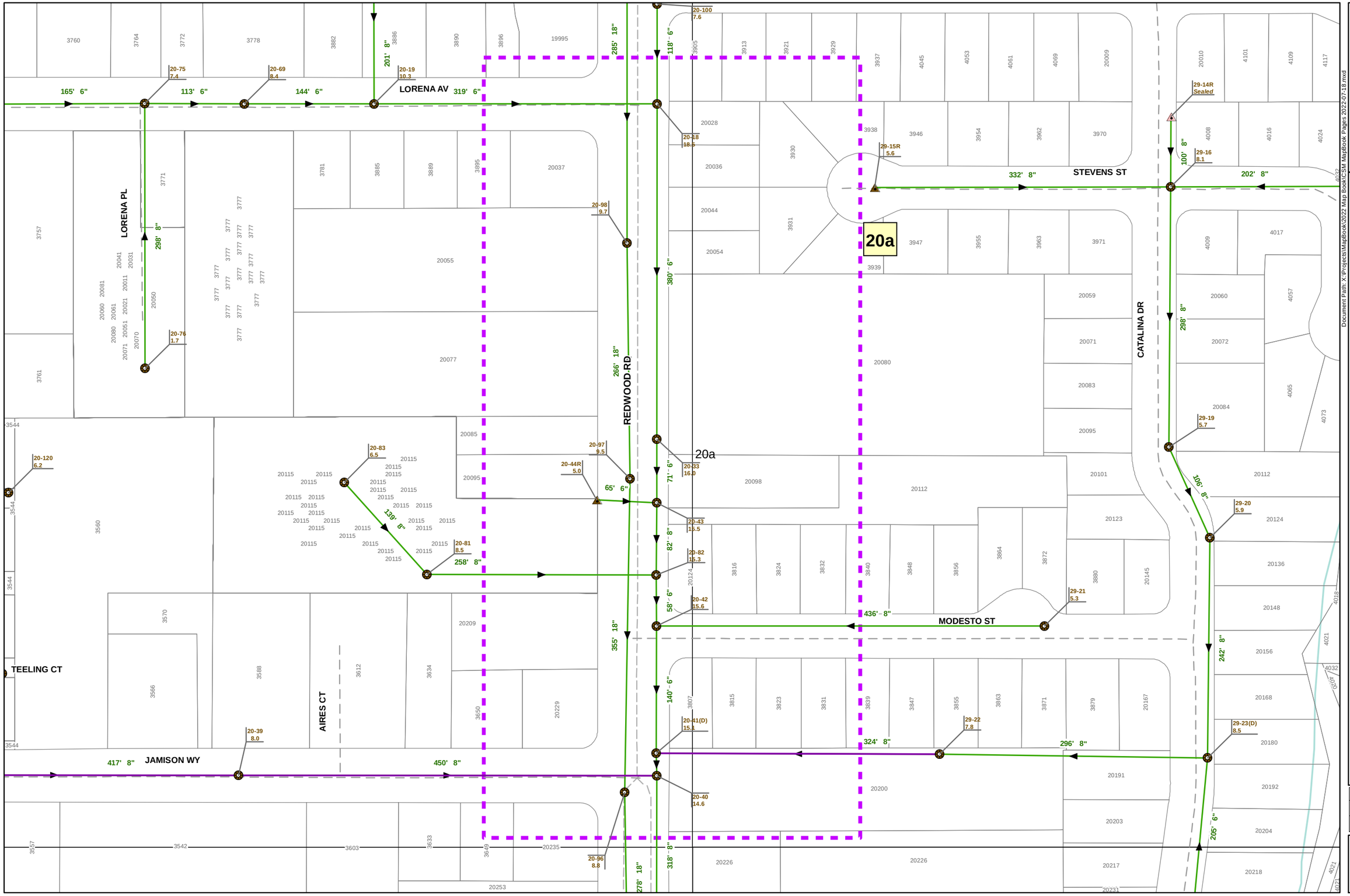

REV.

M. LEE
CVSan

Revision July 2022

Document Path: X:\Projects\MapBook\2022 Map Book\CSM MapBook Pages 2022-07-18.mxd

N

CASTRO VALLEY SANITARY DISTRICT
SEWER SYSTEM FACILITIES

GRAPHIC SCALE
0 100 200 300

Scale:
1"= 100'

20		29
20	20a	29
21		30

20a

THE CASTRO VALLEY SANITARY DISTRICT ASSUMES NO LIABILITY FOR ERRORS OR OMISSIONS FOR UTILITY INFORMATION SHOWN ON THESE MAPS. ALL INFORMATION SHOULD BE FIELD VERIFIED.

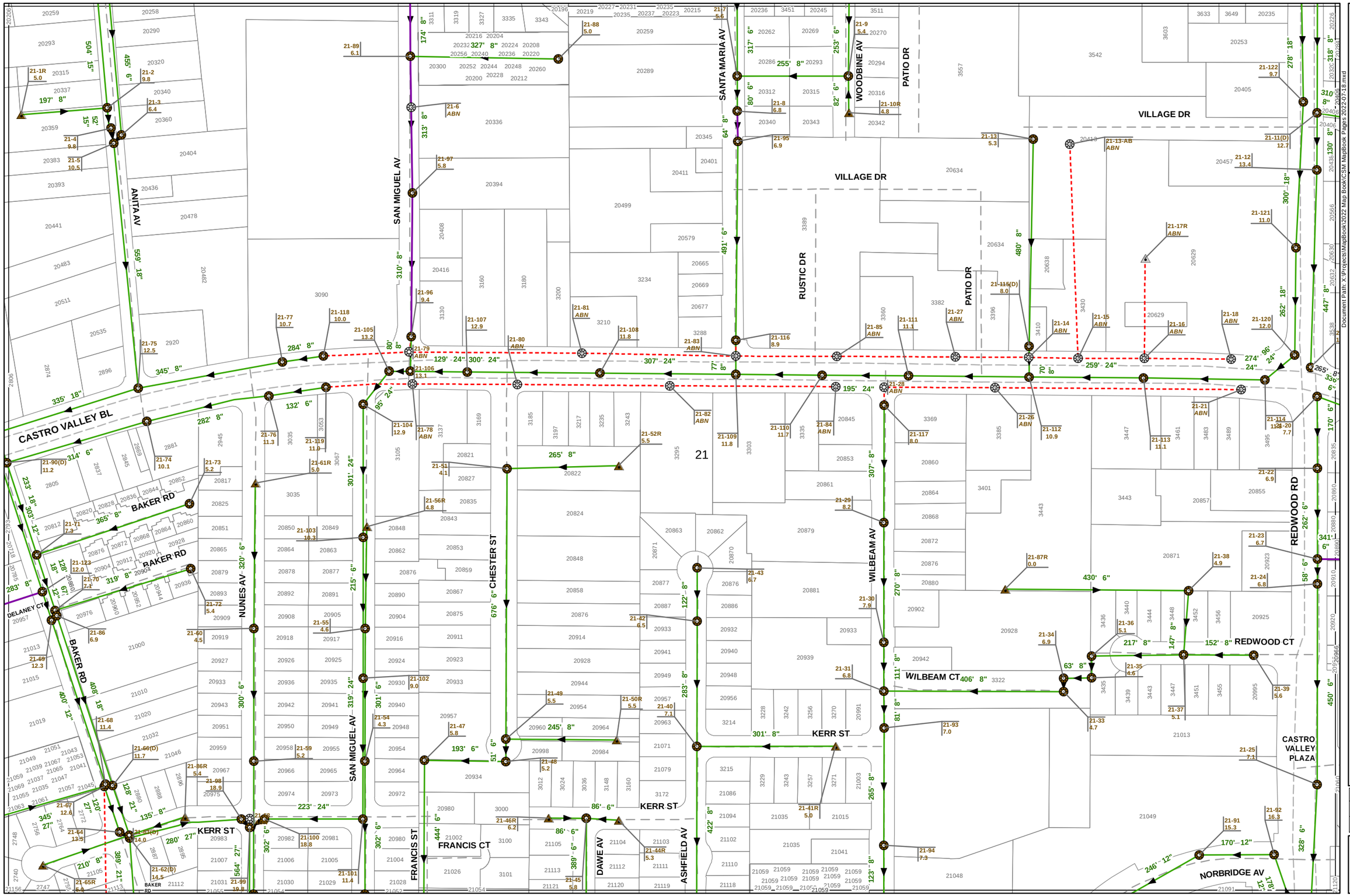

REV.

M. LEE
CVSan

Revision July 2022

Document Path: X:\Projects\MapBook\2022 Map Book\CSM MapBook Pages 2022-07-18.mxd

N

CASTRO VALLEY SANITARY DISTRICT SEWER SYSTEM FACILITIES

GRAPHIC SCALE 0 100 200 300

Scale: 1"= 200'

12	20	29
13	21	30
14	22	31

21

THE CASTRO VALLEY SANITARY DISTRICT ASSUMES NO LIABILITY FOR ERRORS OR OMISSIONS FOR UTILITY INFORMATION SHOWN ON THESE MAPS. ALL INFORMATION SHOULD BE FIELD VERIFIED.

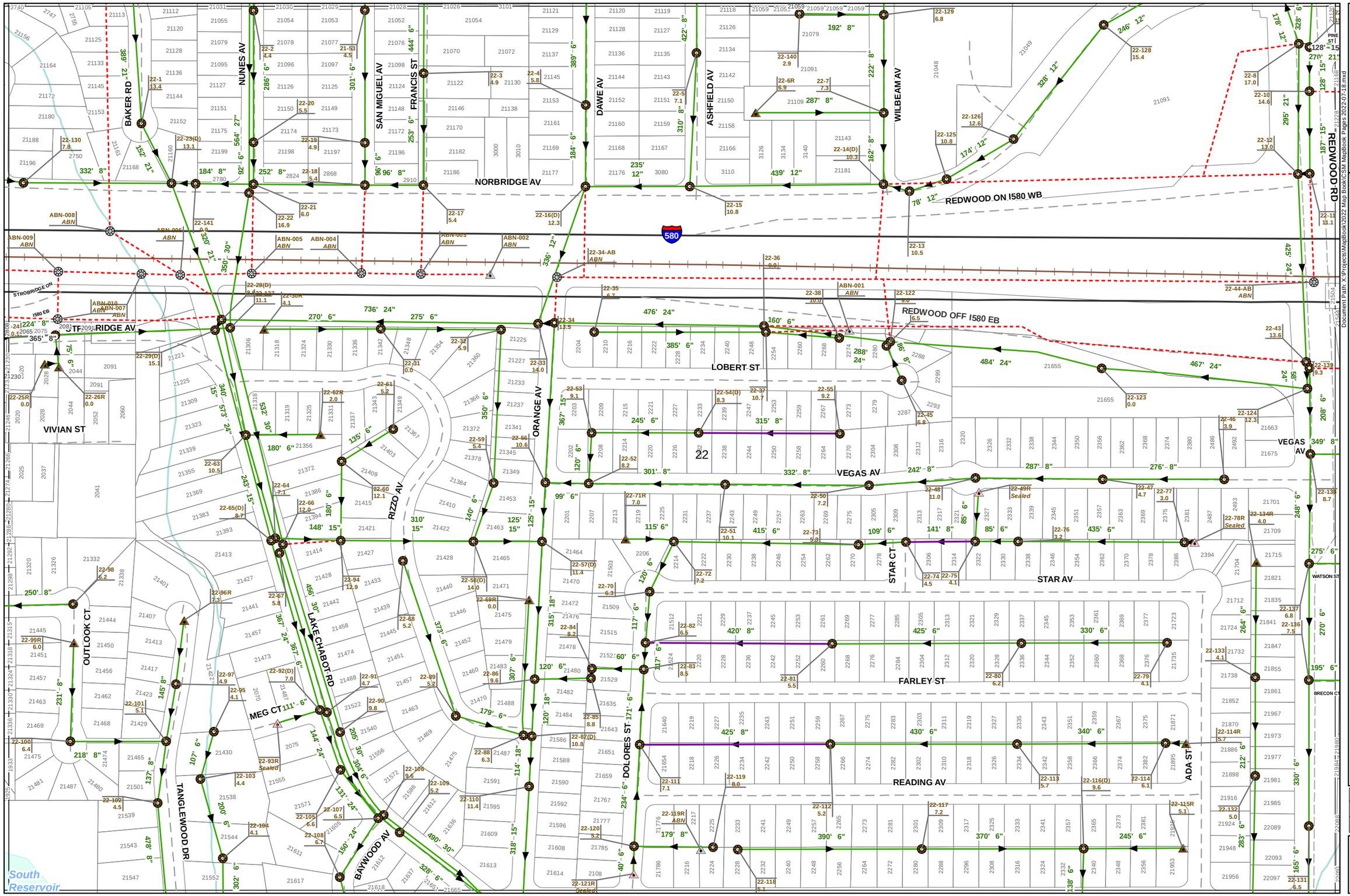

REV.

M. LEE
CVSan

Revision July 2022

Document Path: X:\Projects\MapBook\2022 Map Book\CSM MapBook Pages 2022-07-18.mxd

N

CASTRO VALLEY SANITARY DISTRICT SEWER SYSTEM FACILITIES

GRAPHIC SCALE 0 100 200 300

Scale: 1"= 200'

13	21	30
14	22	31
15	23	32

22

THE CASTRO VALLEY SANITARY DISTRICT ASSUMES NO LIABILITY FOR ERRORS OR OMISSIONS FOR UTILITY INFORMATION SHOWN ON THESE MAPS. ALL INFORMATION SHOULD BE FIELD VERIFIED.

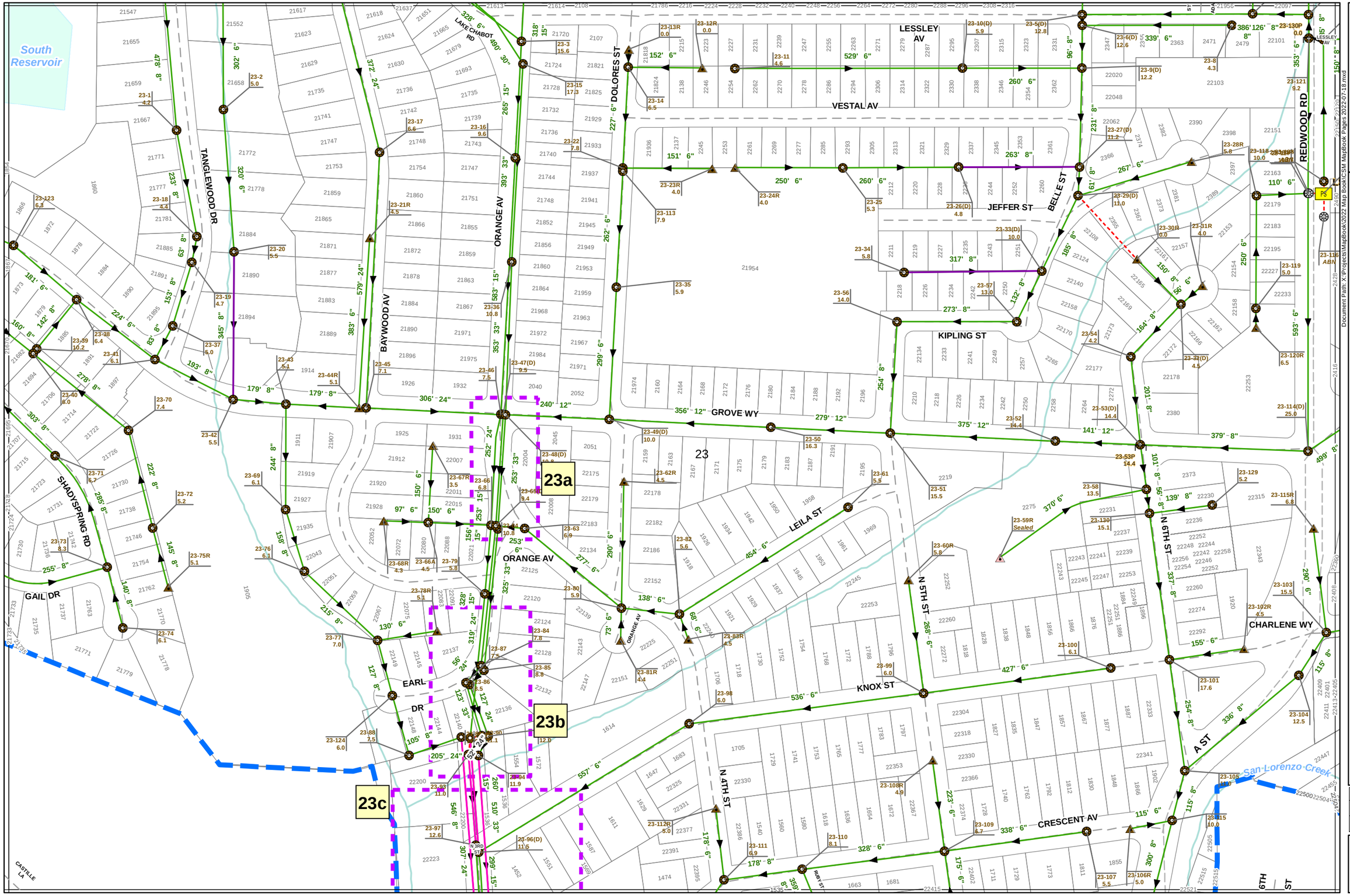

REV.

M. LEE
CVSan

Revision July 2022

Document Path: X:\Projects\MapBook\2022 Map Book\CSM MapBook Pages 2022-07-18.mxd

N

CASTRO VALLEY SANITARY DISTRICT SEWER SYSTEM FACILITIES

GRAPHIC SCALE 0 100 200 300

Scale: 1"= 200'

14	22	31
15	23	32
	24	

23

THE CASTRO VALLEY SANITARY DISTRICT ASSUMES NO LIABILITY FOR ERRORS OR OMISSIONS FOR UTILITY INFORMATION SHOWN ON THESE MAPS. ALL INFORMATION SHOULD BE FIELD VERIFIED.

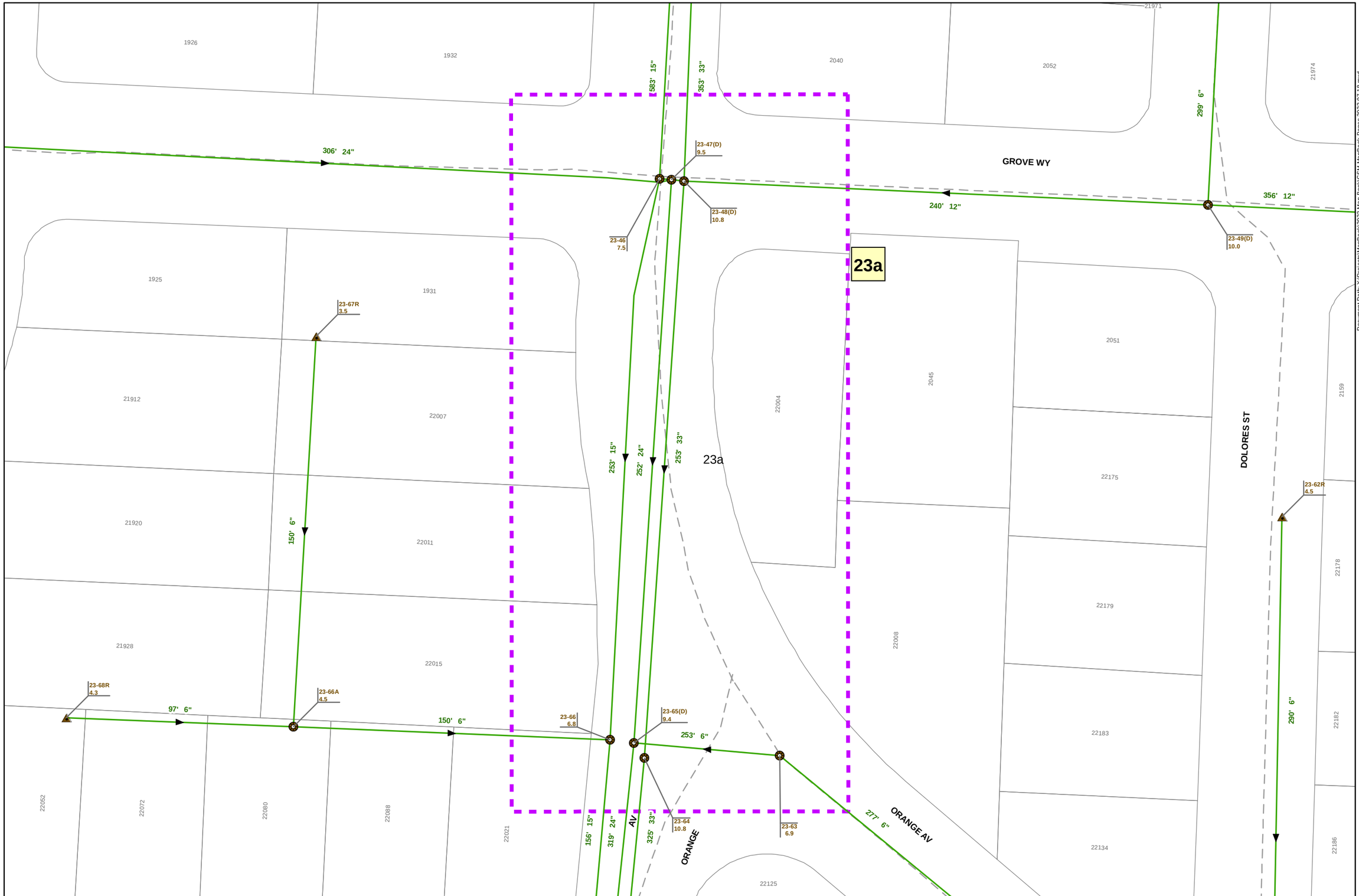

REV.

M. LEE
CVSan

Revision
July 2022

Document Path: X:\Projects\MapBook\2022 Map Book\CSM MapBook Pages 2022-07-18.mxd

N

CASTRO VALLEY SANITARY DISTRICT
SEWER SYSTEM FACILITIES

GRAPHIC SCALE
0 100 200 300

Scale:
1" = 40'

23	23	23
23	23a	23
23	23	23

23a

THE CASTRO VALLEY SANITARY DISTRICT ASSUMES NO LIABILITY FOR ERRORS OR OMISSIONS FOR UTILITY INFORMATION SHOWN ON THESE MAPS. ALL INFORMATION SHOULD BE FIELD VERIFIED.

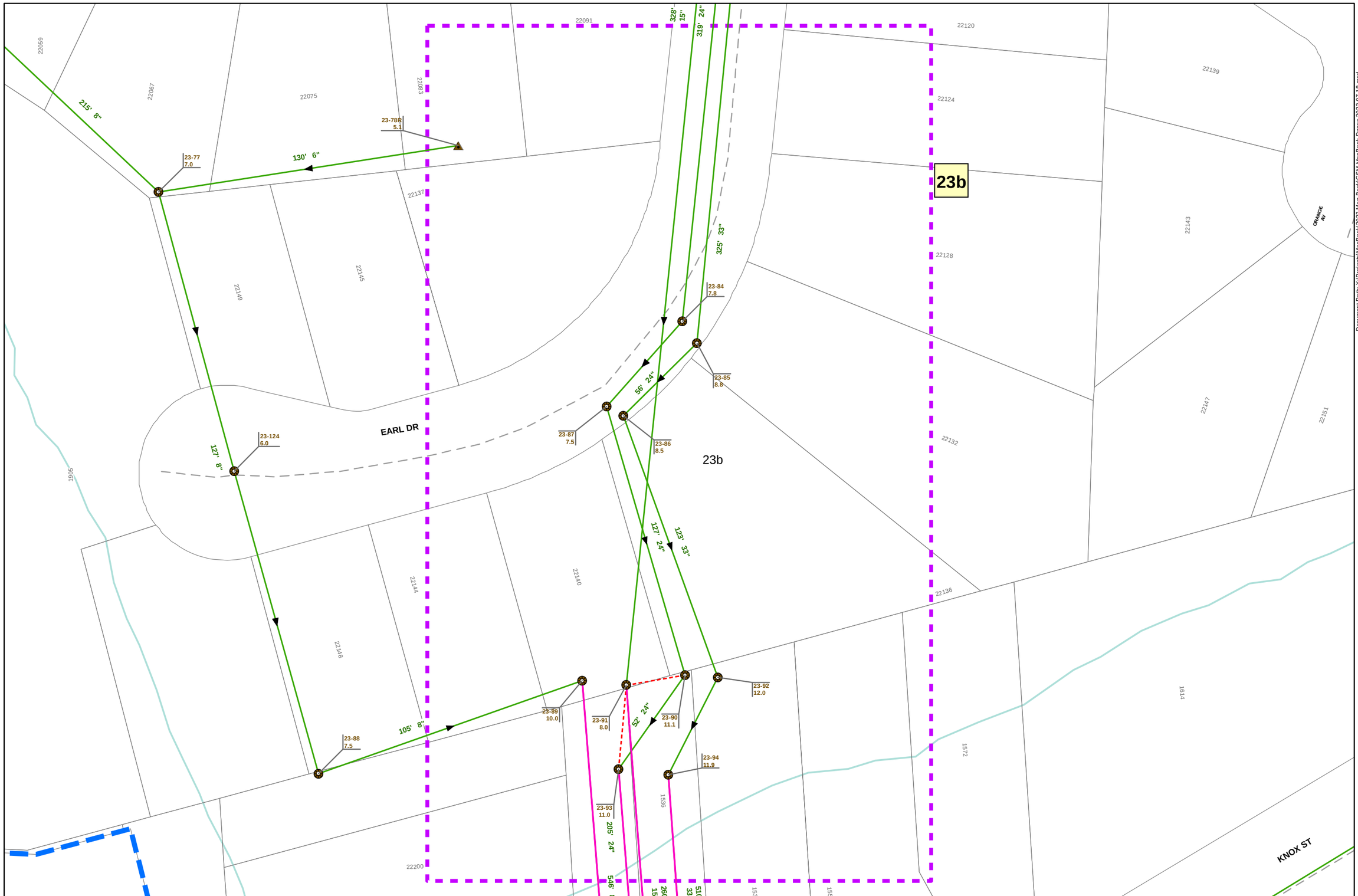

REV.

M. LEE
CVSan

Revision
July 2022

Document Path: X:\Projects\MapBook\2022 Map Book\CSM MapBook Pages 2022-07-18.mxd

N

CASTRO VALLEY SANITARY DISTRICT
SEWER SYSTEM FACILITIES

GRAPHIC SCALE
0 100 200 300

Scale:
1" = 40'

23	23	23
23	23b	23
23	23	23

23b

THE CASTRO VALLEY SANITARY DISTRICT ASSUMES NO LIABILITY FOR ERRORS OR OMISSIONS FOR UTILITY INFORMATION SHOWN ON THESE MAPS. ALL INFORMATION SHOULD BE FIELD VERIFIED.

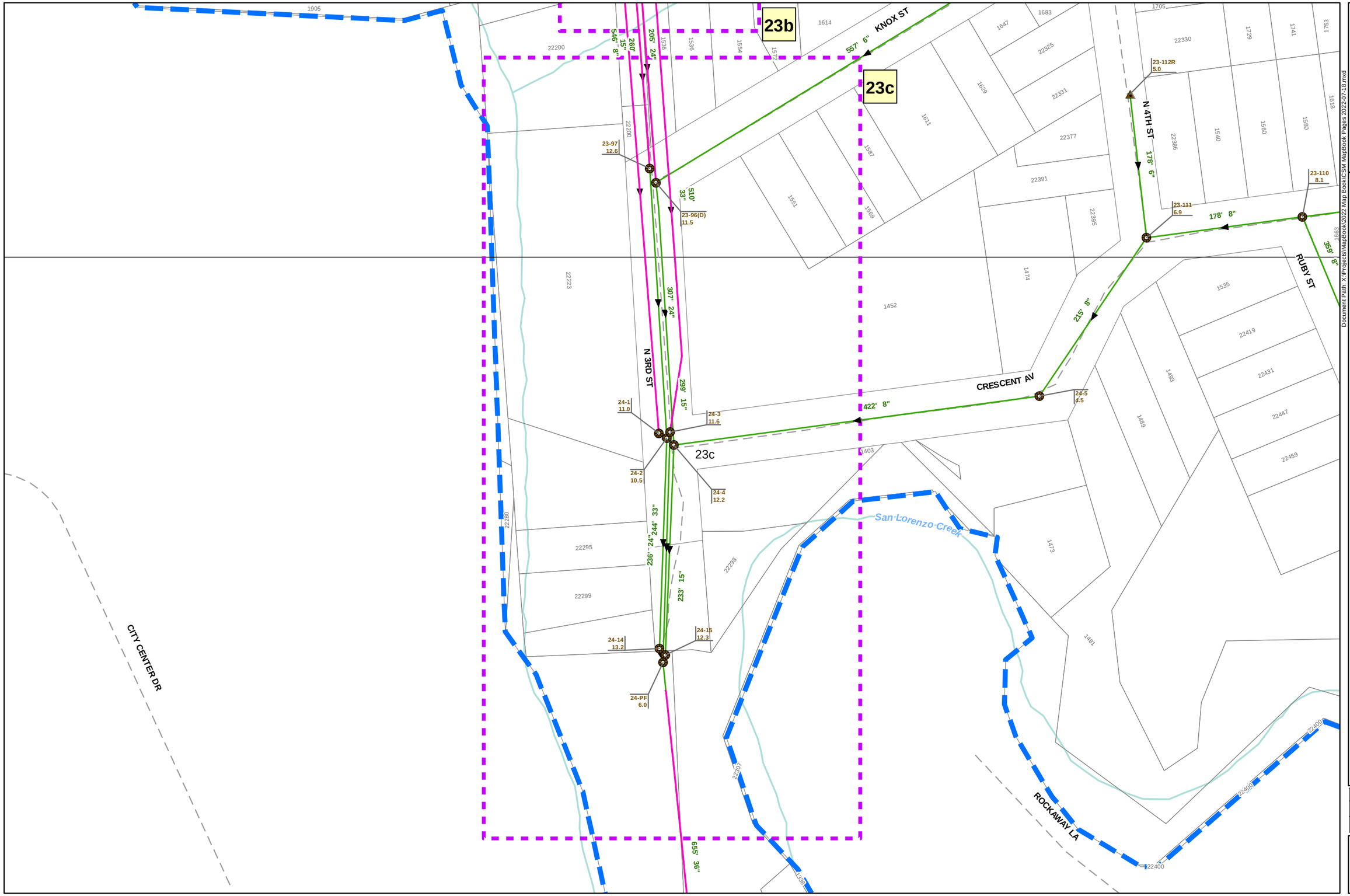

REV.

M. LEE
CVSan

Revision July 2022

Document Path: X:\Projects\MapBook\2022 Map Book\CSM MapBook Pages 2022-07-18.mxd

N

GRAPHIC SCALE

0 100 200 300

Scale:
1"= 100'

23	23	23
	23c	
24	24	24

CASTRO VALLEY SANITARY DISTRICT
SEWER SYSTEM FACILITIES

23c

THE CASTRO VALLEY SANITARY DISTRICT ASSUMES NO LIABILITY FOR ERRORS OR OMISSIONS FOR UTILITY INFORMATION SHOWN ON THESE MAPS. ALL INFORMATION SHOULD BE FIELD VERIFIED.

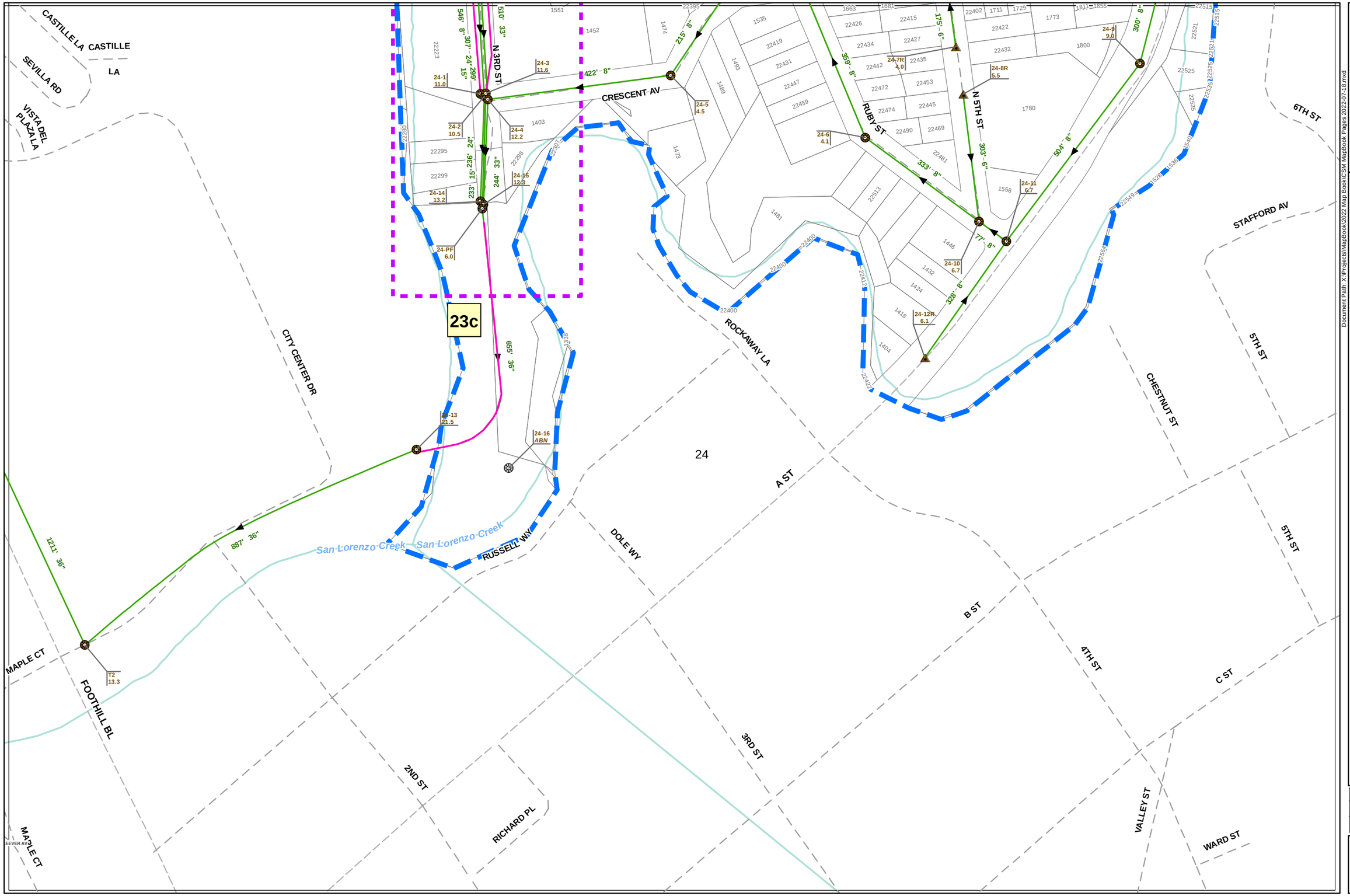

REV.

M. LEE
CVSan

Revision July 2022

Document Path: X:\Projects\MapBook\2022 Map Book\CSM MapBook Pages 2022-07-18.mxd

N

CASTRO VALLEY SANITARY DISTRICT
SEWER SYSTEM FACILITIES

GRAPHIC SCALE
0 100 200 300

Scale:
1" = 200'

15	23	32
	24	

24

THE CASTRO VALLEY SANITARY DISTRICT ASSUMES NO LIABILITY FOR ERRORS OR OMISSIONS FOR UTILITY INFORMATION SHOWN ON THESE MAPS. ALL INFORMATION SHOULD BE FIELD VERIFIED.

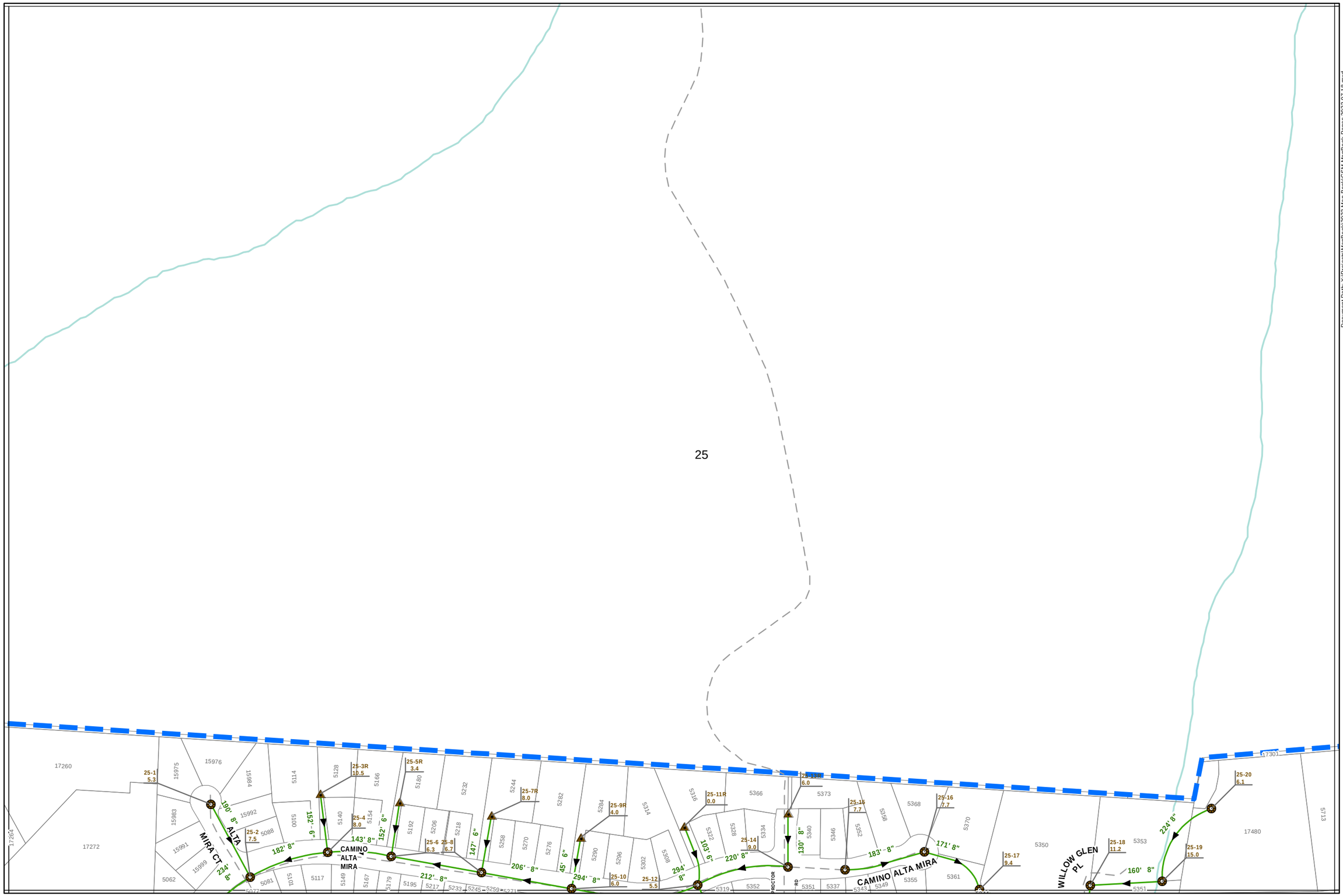

REV.

M. LEE
CVSan

Revision July 2022

Document Path: X:\Projects\MapBook\2022 Map Book\CSM MapBook Pages 2022-07-18.mxd

N

CASTRO VALLEY SANITARY DISTRICT SEWER SYSTEM FACILITIES

GRAPHIC SCALE

0 100 200 300

Scale: 1"= 200'

		48
16	25	47
17	26	33

25

THE CASTRO VALLEY SANITARY DISTRICT ASSUMES NO LIABILITY FOR ERRORS OR OMISSIONS FOR UTILITY INFORMATION SHOWN ON THESE MAPS. ALL INFORMATION SHOULD BE FIELD VERIFIED.

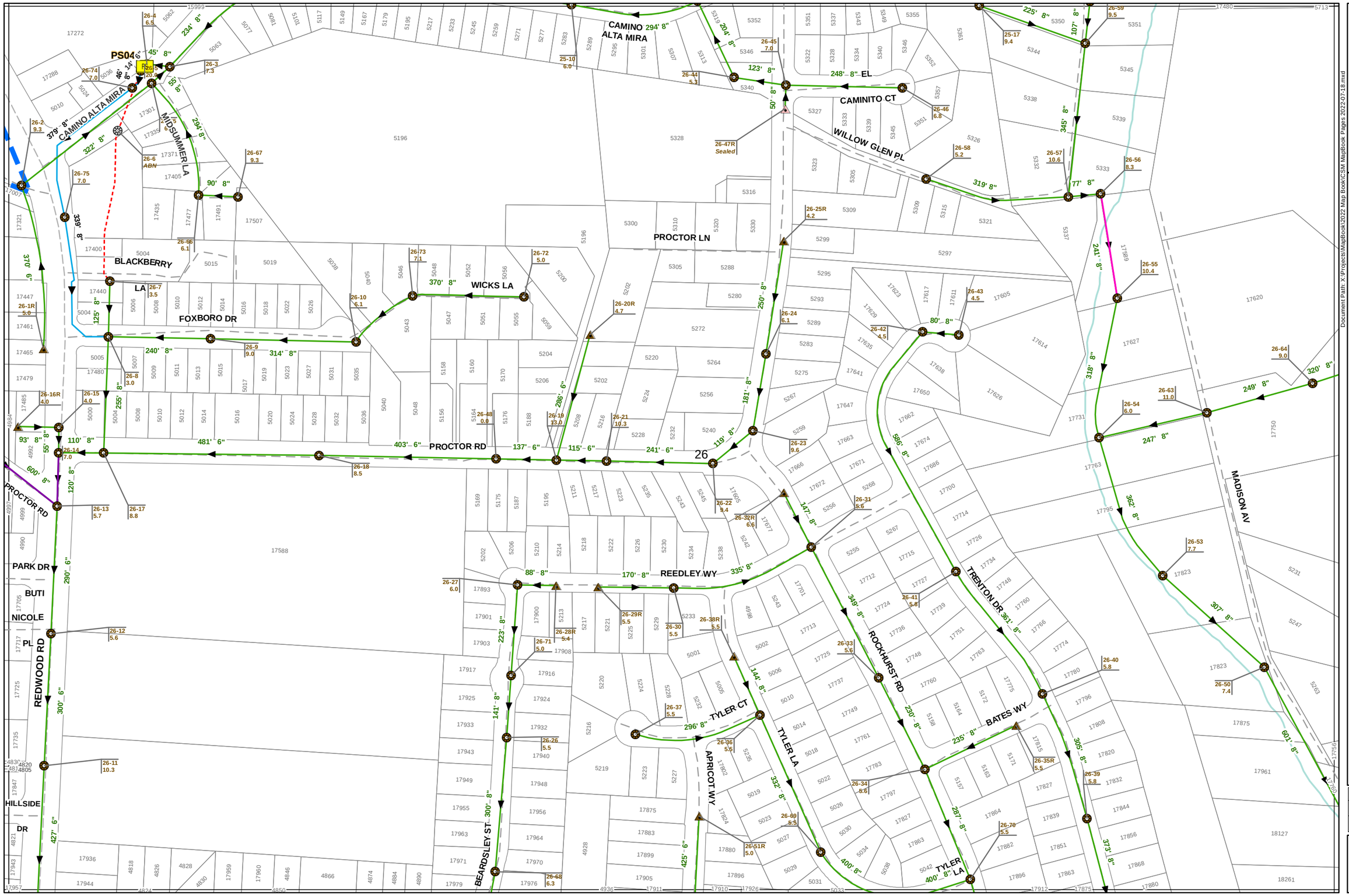

REV.

M. LEE
CVSan

Revision July 2022

Document Path: X:\Projects\MapBook\2022 Map Book\CSM MapBook Pages 2022-07-18.mxd

N

CASTRO VALLEY SANITARY DISTRICT SEWER SYSTEM FACILITIES

GRAPHIC SCALE 0 100 200 300

Scale: 1"= 200'

16	25	47
17	26	33
18	27	34

26

THE CASTRO VALLEY SANITARY DISTRICT ASSUMES NO LIABILITY FOR ERRORS OR OMISSIONS FOR UTILITY INFORMATION SHOWN ON THESE MAPS. ALL INFORMATION SHOULD BE FIELD VERIFIED.

REV.

M. LEE
CVSan

Revision July 2022

Document Path: X:\Projects\MapBook\2022 Map Book\CSM MapBook Pages 2022-07-18.mxd

N

CASTRO VALLEY SANITARY DISTRICT
SEWER SYSTEM FACILITIES

GRAPHIC SCALE
0 100 200 300

Scale:
1" = 200'

17	26	33
18	**27**	34
19	28	35

27

THE CASTRO VALLEY SANITARY DISTRICT ASSUMES NO LIABILITY FOR ERRORS OR OMISSIONS FOR UTILITY INFORMATION SHOWN ON THESE MAPS. ALL INFORMATION SHOULD BE FIELD VERIFIED.

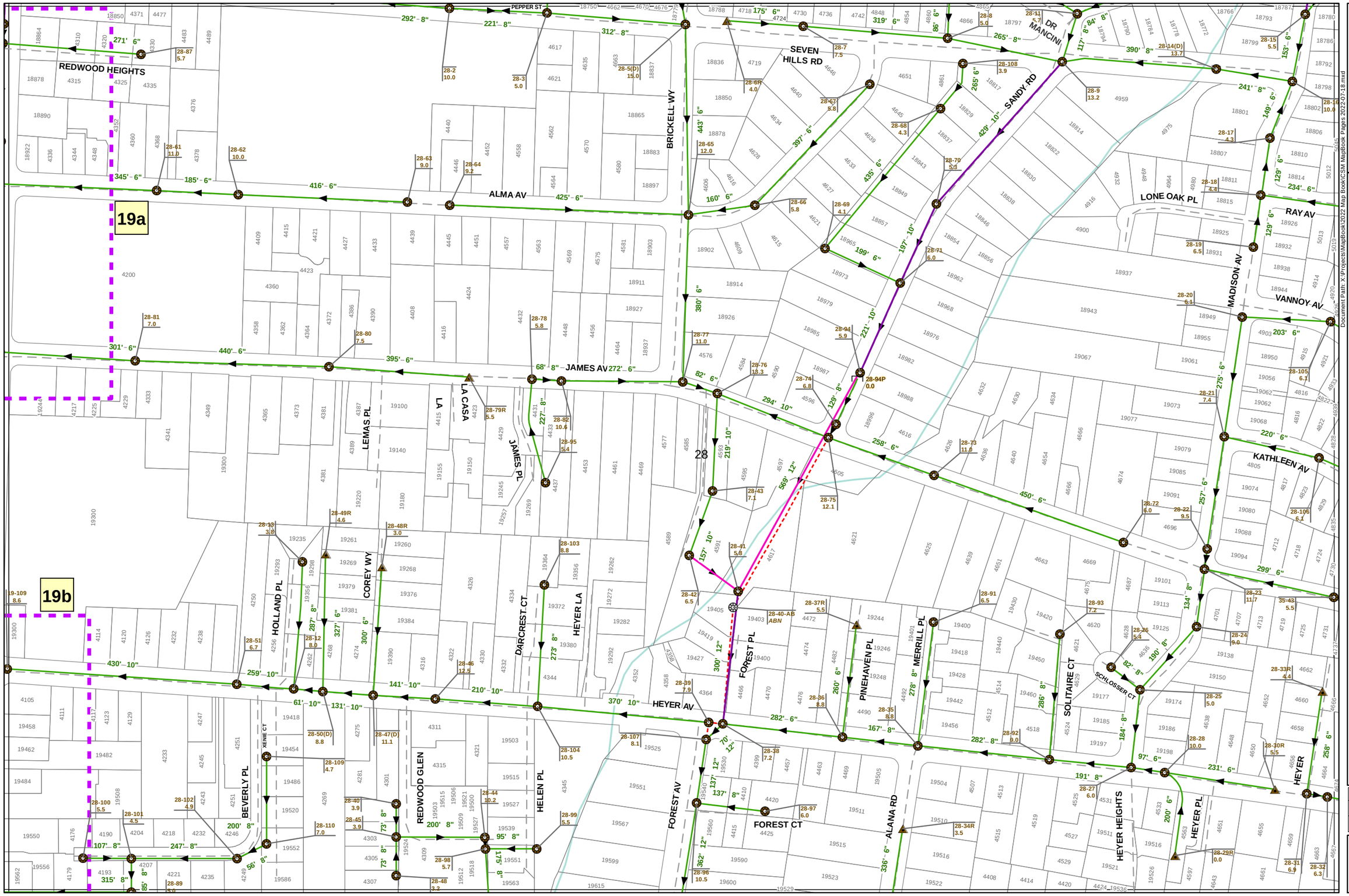

THE CASTRO VALLEY SANITARY DISTRICT ASSUMES NO LIABILITY FOR ERRORS OR OMISSIONS FOR UTILITY INFORMATION SHOWN ON THESE MAPS. ALL INFORMATION SHOULD BE FIELD VERIFIED.

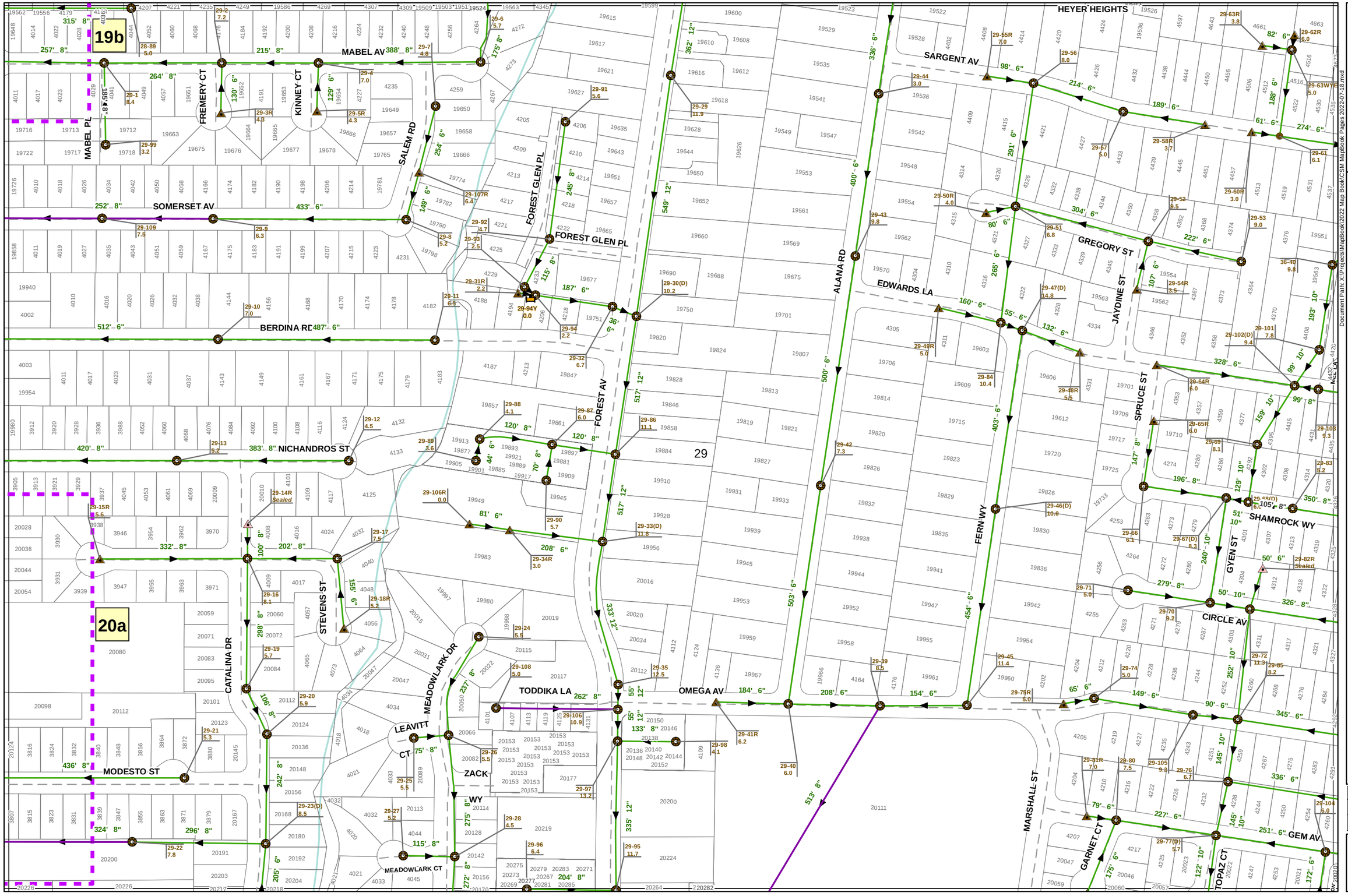

THE CASTRO VALLEY SANITARY DISTRICT ASSUMES NO LIABILITY FOR ERRORS OR OMISSIONS FOR UTILITY INFORMATION SHOWN ON THESE MAPS. ALL INFORMATION SHOULD BE FIELD VERIFIED.

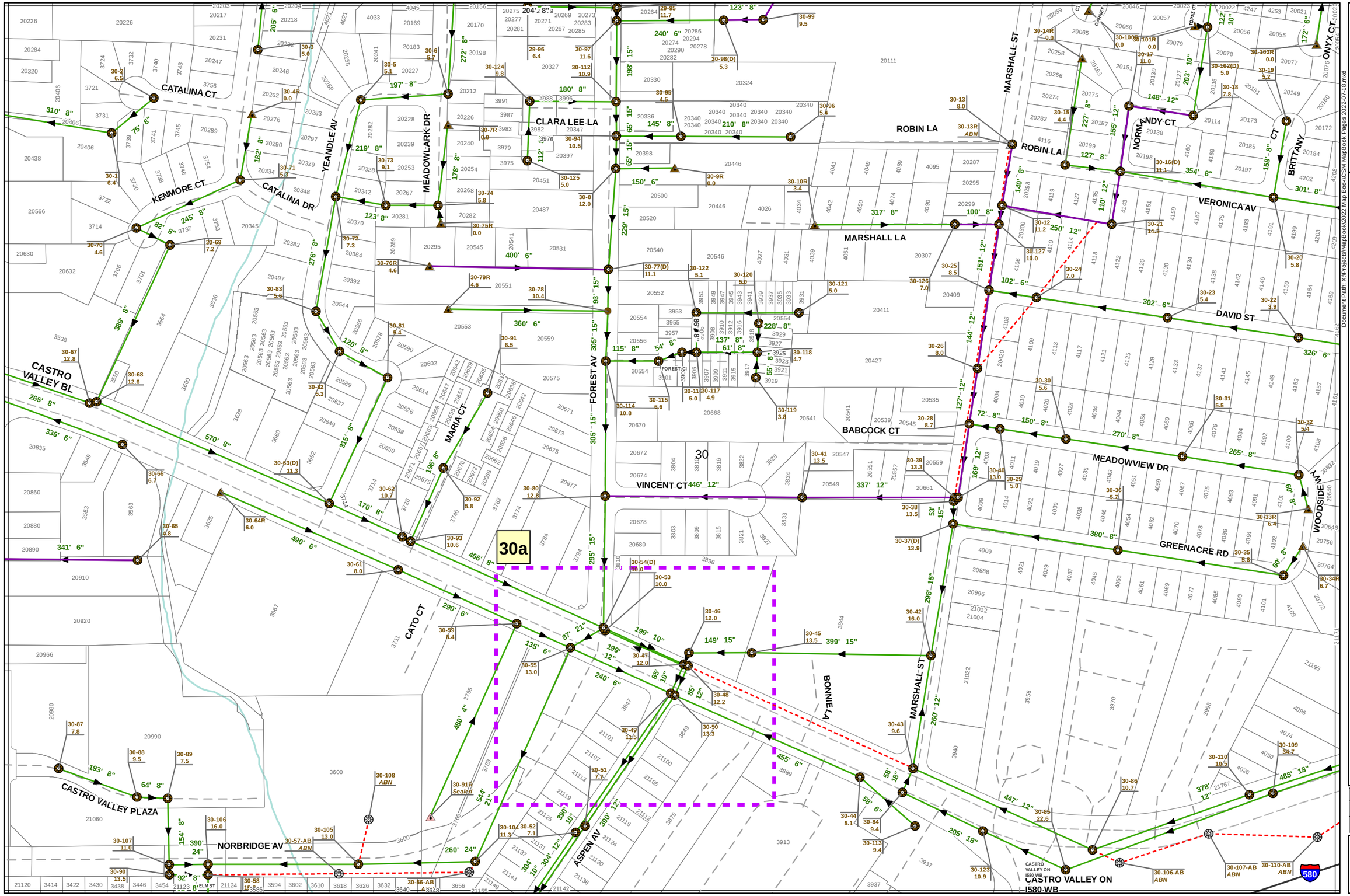

REV.

M. LEE
CVSan

Revision July 2022

Document Path: X:\Projects\MapBook\2022 Map Book\CSM MapBook Pages 2022-07-18.mxd

N

CASTRO VALLEY SANITARY DISTRICT SEWER SYSTEM FACILITIES

GRAPHIC SCALE 0 100 200 300

Scale: 1"= 200'

20	29	36
21	30	37
22	31	38

30

THE CASTRO VALLEY SANITARY DISTRICT ASSUMES NO LIABILITY FOR ERRORS OR OMISSIONS FOR UTILITY INFORMATION SHOWN ON THESE MAPS. ALL INFORMATION SHOULD BE FIELD VERIFIED.

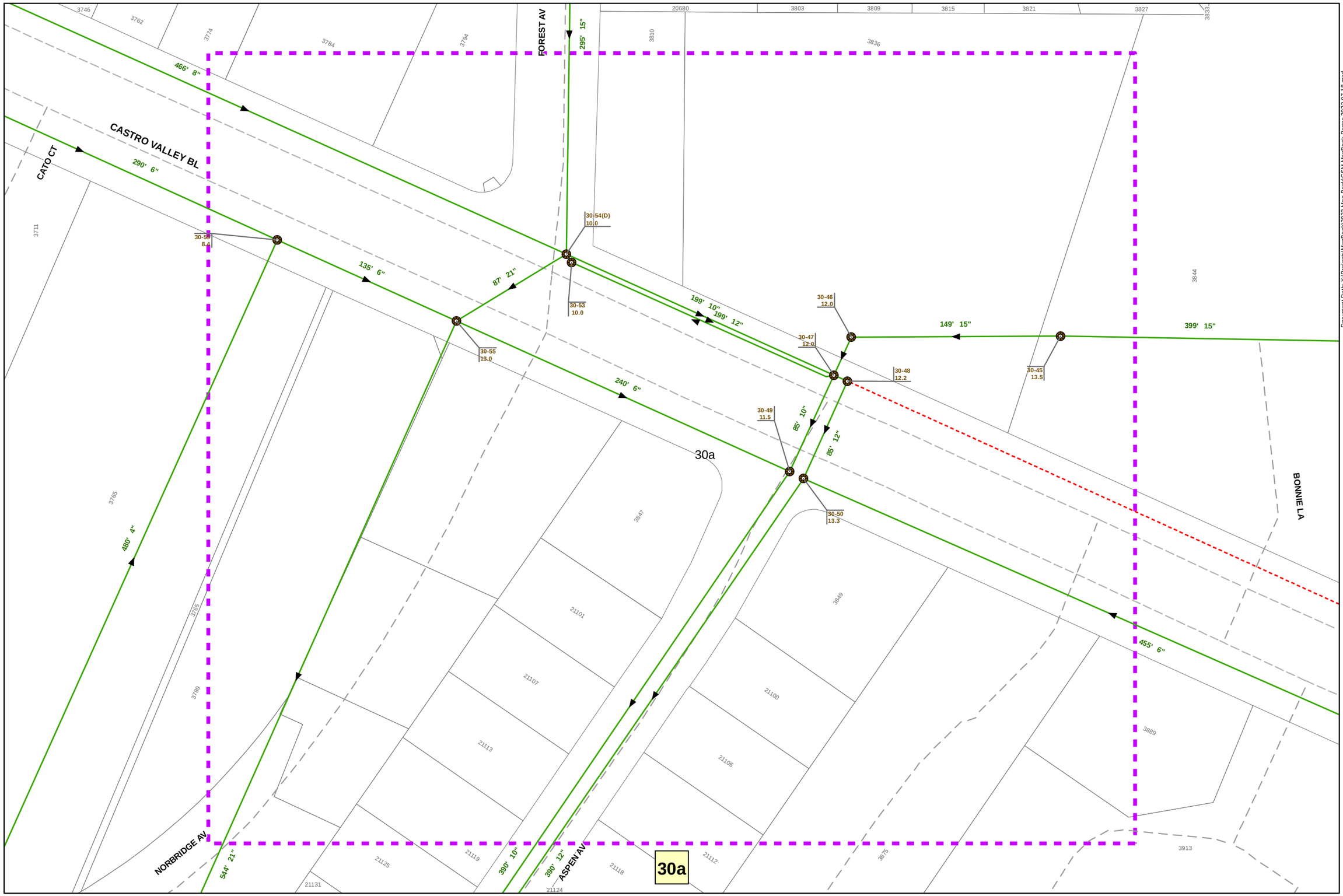

REV.

M. LEE
CVSan

Revision
July 2022

Document Path: X:\Projects\MapBook\2022 Map Book\CSM MapBook Pages 2022-07-18.mxd

N

GRAPHIC SCALE
0 100 200 300

Scale:
1" = 60'

30	30	30
30	30a	30
30	30	30

CASTRO VALLEY SANITARY DISTRICT
SEWER SYSTEM FACILITIES

30a

THE CASTRO VALLEY SANITARY DISTRICT ASSUMES NO LIABILITY FOR ERRORS OR OMISSIONS FOR UTILITY INFORMATION SHOWN ON THESE MAPS. ALL INFORMATION SHOULD BE FIELD VERIFIED.

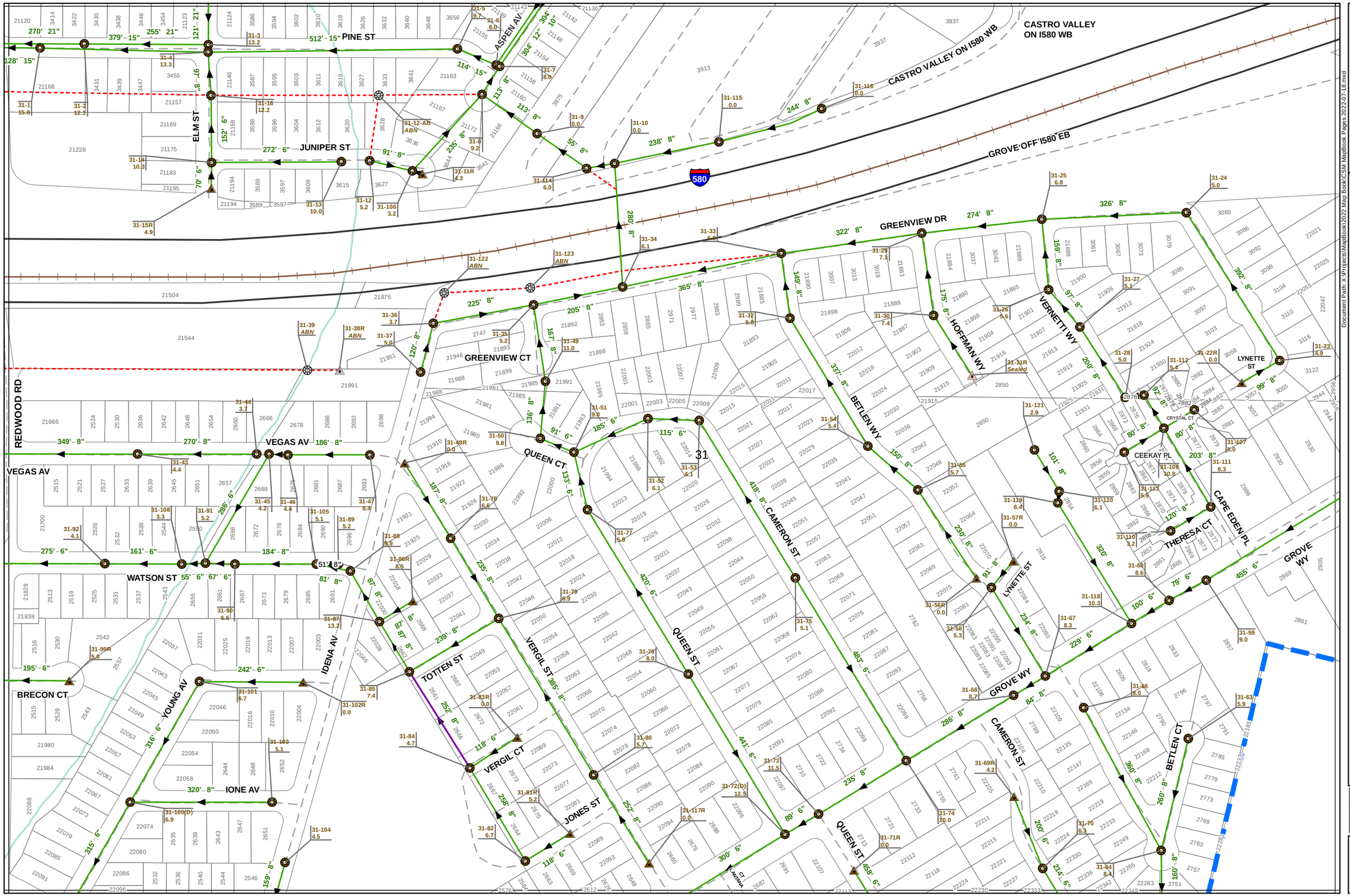

REV.

M. LEE
CVSan

Revision July 2022

Document Path: X:\Projects\MapBook\2022 Map Book\CSM MapBook Pages 2022-07-18.mxd

N

GRAPHIC SCALE 0 100 200 300

Scale: 1"= 200'

21	30	37
22	31	38
23	32	

CASTRO VALLEY SANITARY DISTRICT SEWER SYSTEM FACILITIES

31

THE CASTRO VALLEY SANITARY DISTRICT ASSUMES NO LIABILITY FOR ERRORS OR OMISSIONS FOR UTILITY INFORMATION SHOWN ON THESE MAPS. ALL INFORMATION SHOULD BE FIELD VERIFIED.

REV.

M. LEE
CVSan

Revision July 2022

Document Path: X:\Projects\MapBook\2022 Map Book\CSM MapBook Pages 2022-07-18.mxd

N

CASTRO VALLEY SANITARY DISTRICT SEWER SYSTEM FACILITIES

GRAPHIC SCALE 0 100 200 300

Scale: 1"= 200'

22	31	38
23	32	
24		

32

THE CASTRO VALLEY SANITARY DISTRICT ASSUMES NO LIABILITY FOR ERRORS OR OMISSIONS FOR UTILITY INFORMATION SHOWN ON THESE MAPS. ALL INFORMATION SHOULD BE FIELD VERIFIED.

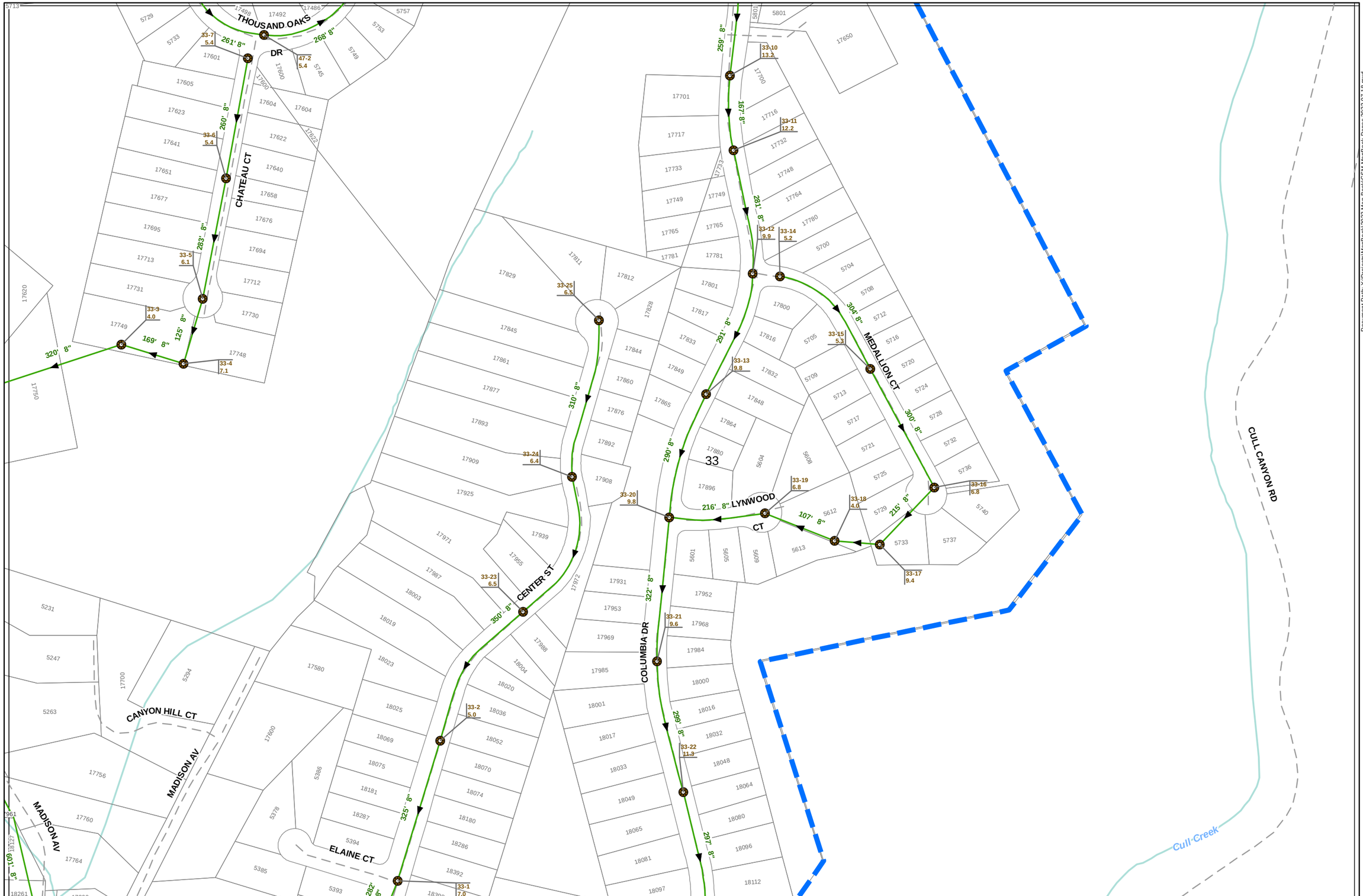

REV.

M. LEE
CVSan

Revision July 2022

Document Path: X:\Projects\MapBook\2022 Map Book\CSM MapBook Pages 2022-07-18.mxd

N

CASTRO VALLEY SANITARY DISTRICT
SEWER SYSTEM FACILITIES

GRAPHIC SCALE
0 100 200 300

Scale:
1"= 200'

25	47	
26	**33**	39
27	34	40

33

THE CASTRO VALLEY SANITARY DISTRICT ASSUMES NO LIABILITY FOR ERRORS OR OMISSIONS FOR UTILITY INFORMATION SHOWN ON THESE MAPS. ALL INFORMATION SHOULD BE FIELD VERIFIED.

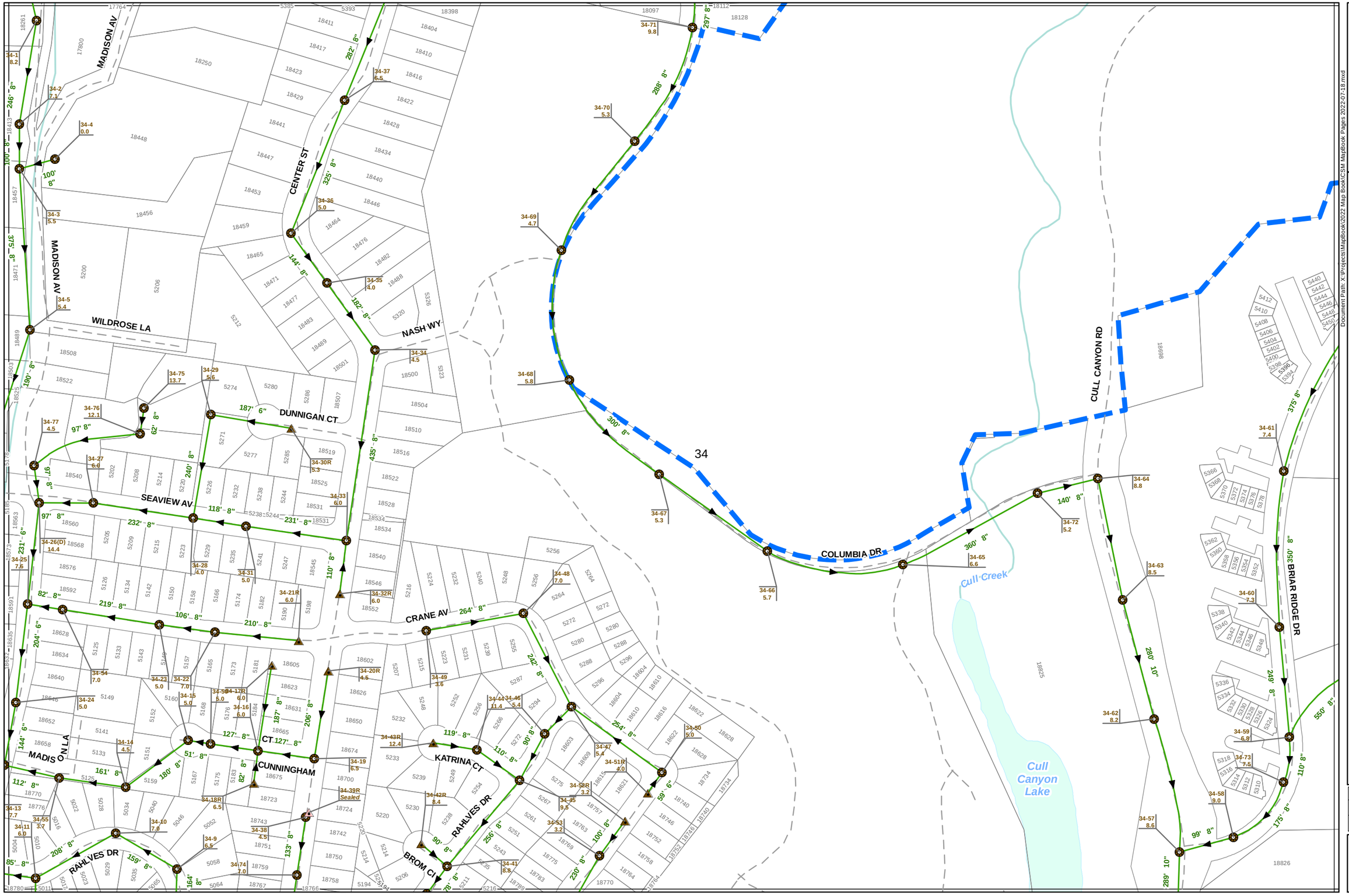

REV.

M. LEE
CVSan

Revision July 2022

Document Path: X:\Projects\MapBook\2022 Map Book\CSM MapBook Pages 2022-07-18.mxd

CASTRO VALLEY SANITARY DISTRICT SEWER SYSTEM FACILITIES

26	33	39
27	**34**	40
28	35	41

34

THE CASTRO VALLEY SANITARY DISTRICT ASSUMES NO LIABILITY FOR ERRORS OR OMISSIONS FOR UTILITY INFORMATION SHOWN ON THESE MAPS. ALL INFORMATION SHOULD BE FIELD VERIFIED.

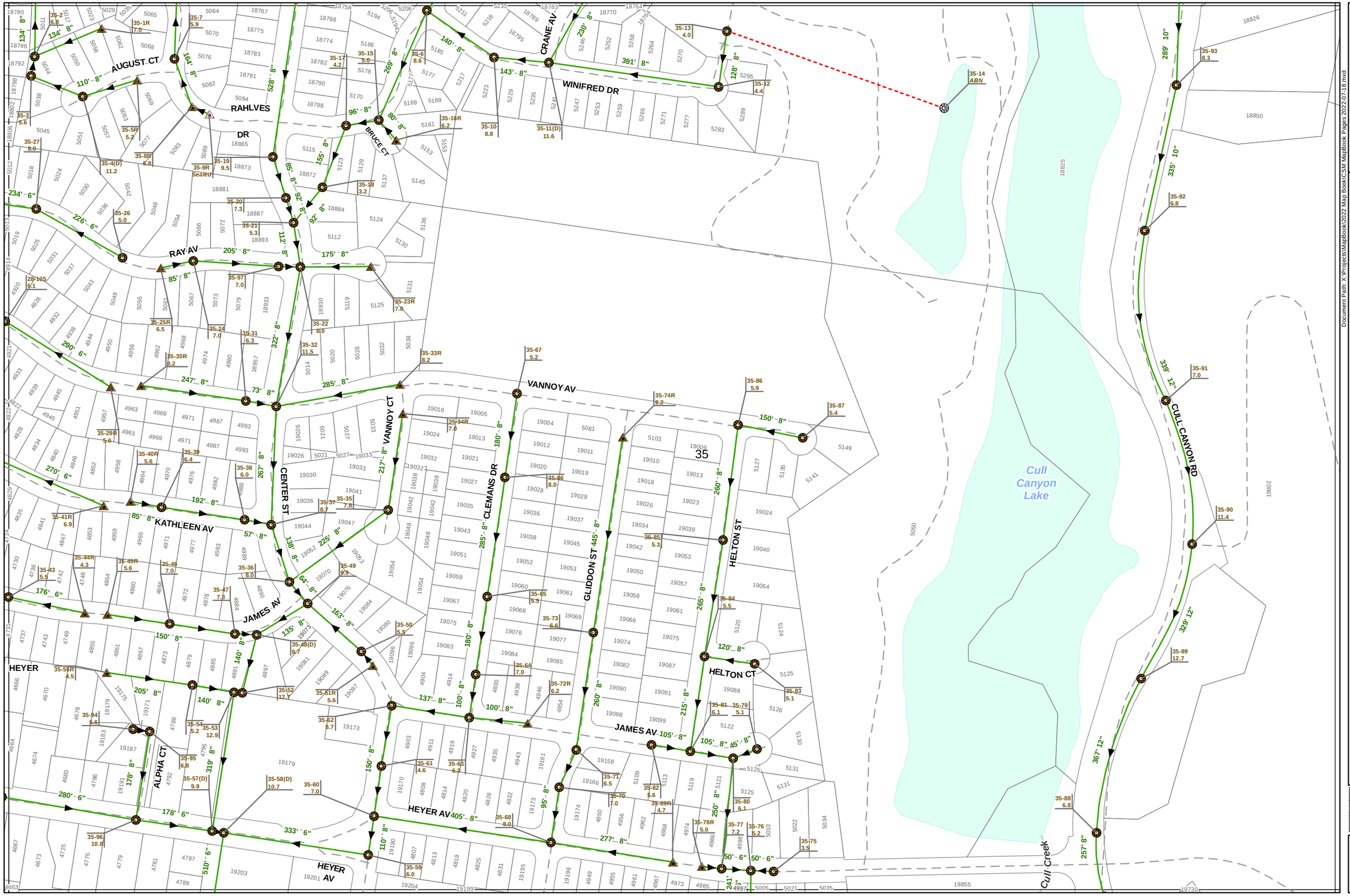

REV.

M. LEE
CVSan

Revision July 2022

Document Path: X:\Projects\MapBook\2022 Map Book\CSM MapBook Pages 2022-07-18.mxd

N

CASTRO VALLEY SANITARY DISTRICT
SEWER SYSTEM FACILITIES

GRAPHIC SCALE 0 100 200 300

Scale: 1"= 200'

27	34	40
28	35	41
29	36	42

35

THE CASTRO VALLEY SANITARY DISTRICT ASSUMES NO LIABILITY FOR ERRORS OR OMISSIONS FOR UTILITY INFORMATION SHOWN ON THESE MAPS. ALL INFORMATION SHOULD BE FIELD VERIFIED.

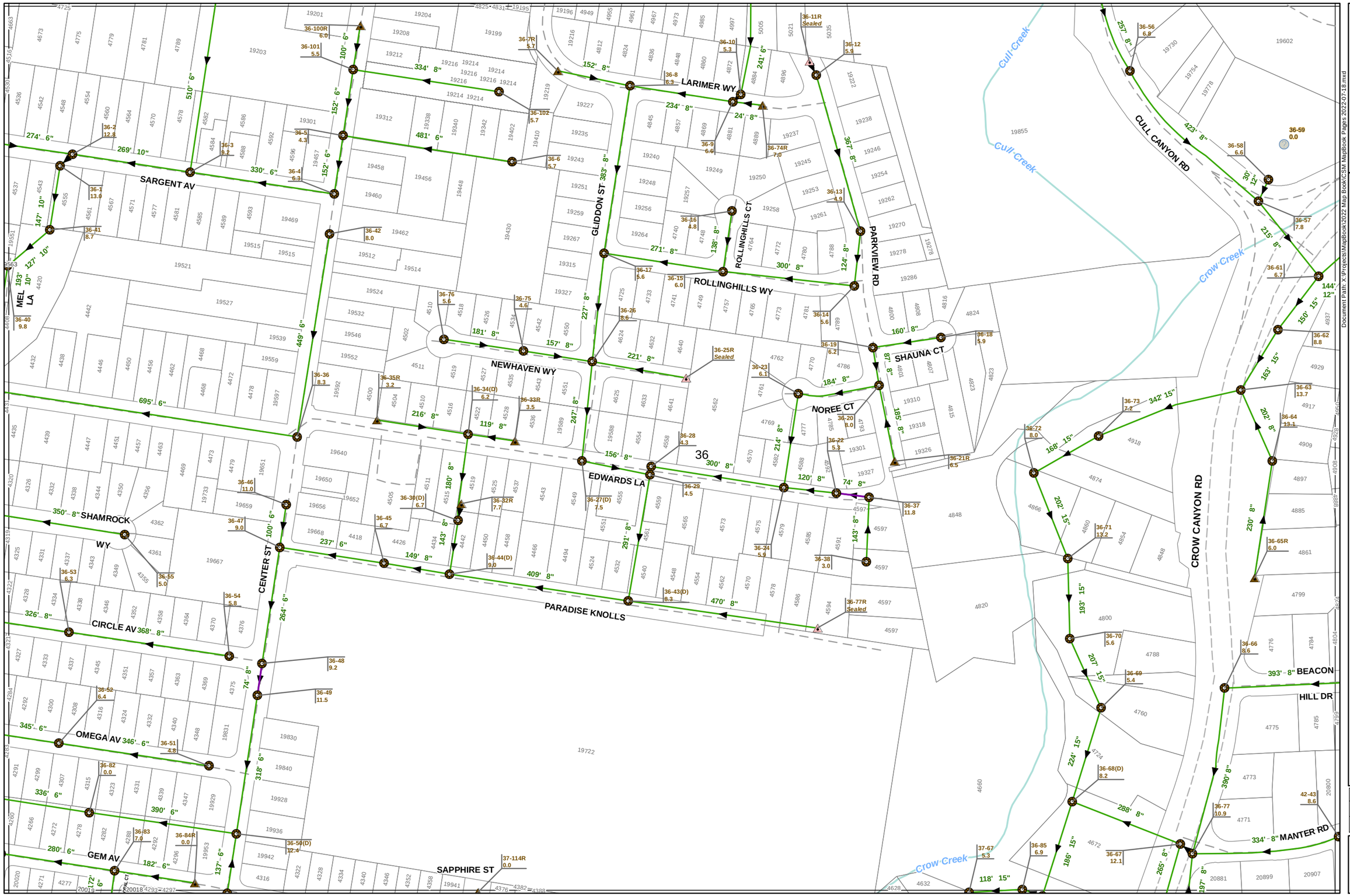

REV.

M. LEE
CVSan

Revision July 2022

Document Path: X:\Projects\MapBook\2022 Map Book\CSM MapBook Pages 2022-07-18.mxd

N

GRAPHIC SCALE 0 100 200 300

Scale: 1"= 200'

28	35	41
29	36	42
30	37	43

CASTRO VALLEY SANITARY DISTRICT SEWER SYSTEM FACILITIES

36

THE CASTRO VALLEY SANITARY DISTRICT ASSUMES NO LIABILITY FOR ERRORS OR OMISSIONS FOR UTILITY INFORMATION SHOWN ON THESE MAPS. ALL INFORMATION SHOULD BE FIELD VERIFIED.

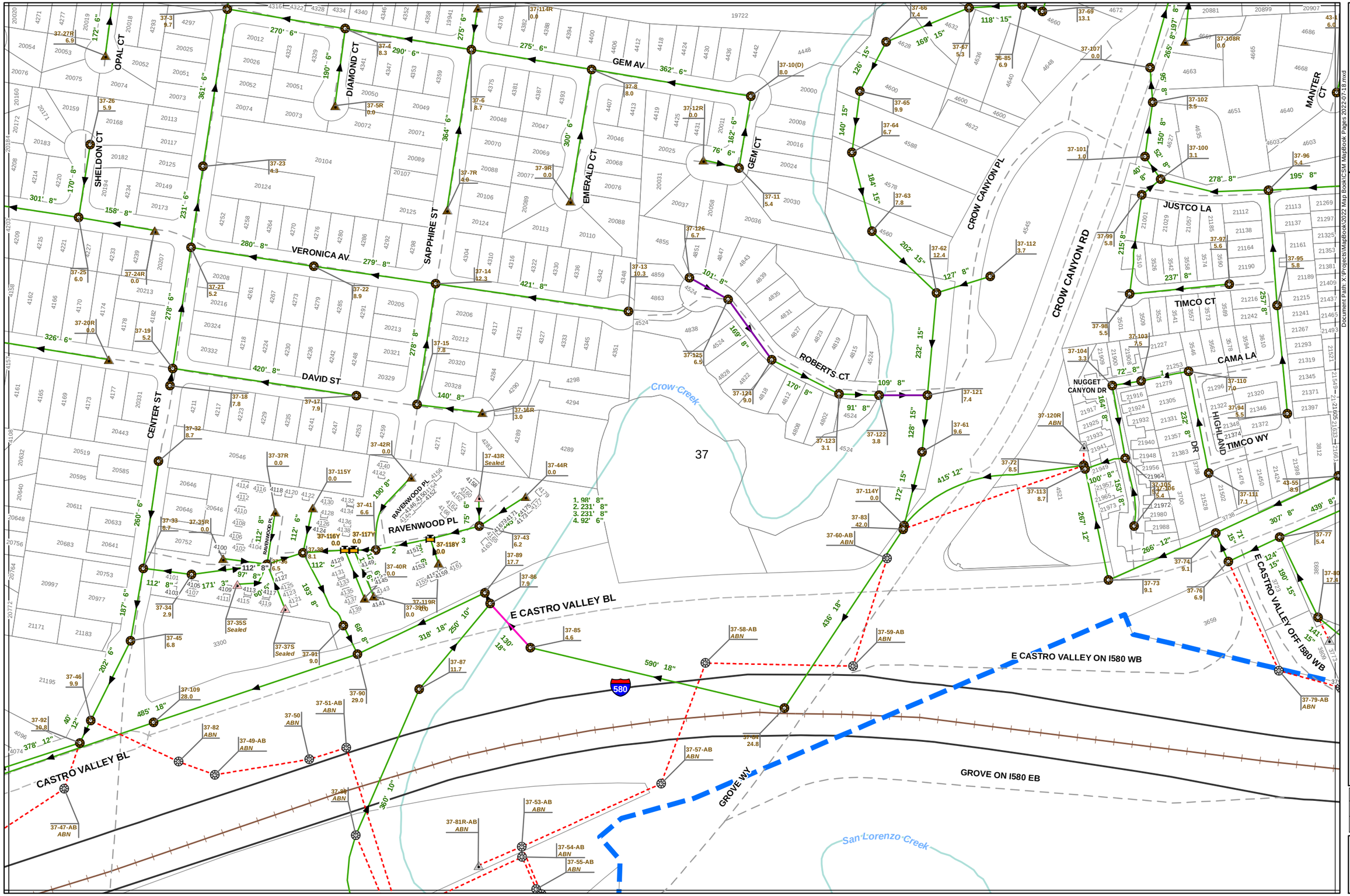

REV.

M. LEE
CVSan

Revision July 2022

Document Path: X:\Projects\MapBook\2022 Map Book\CSM MapBook Pages 2022-07-18.mxd

N

CASTRO VALLEY SANITARY DISTRICT SEWER SYSTEM FACILITIES

GRAPHIC SCALE 0 100 200 300

Scale: 1"= 200'

29	36	42
30	37	43
31	38	

37

THE CASTRO VALLEY SANITARY DISTRICT ASSUMES NO LIABILITY FOR ERRORS OR OMISSIONS FOR UTILITY INFORMATION SHOWN ON THESE MAPS. ALL INFORMATION SHOULD BE FIELD VERIFIED.

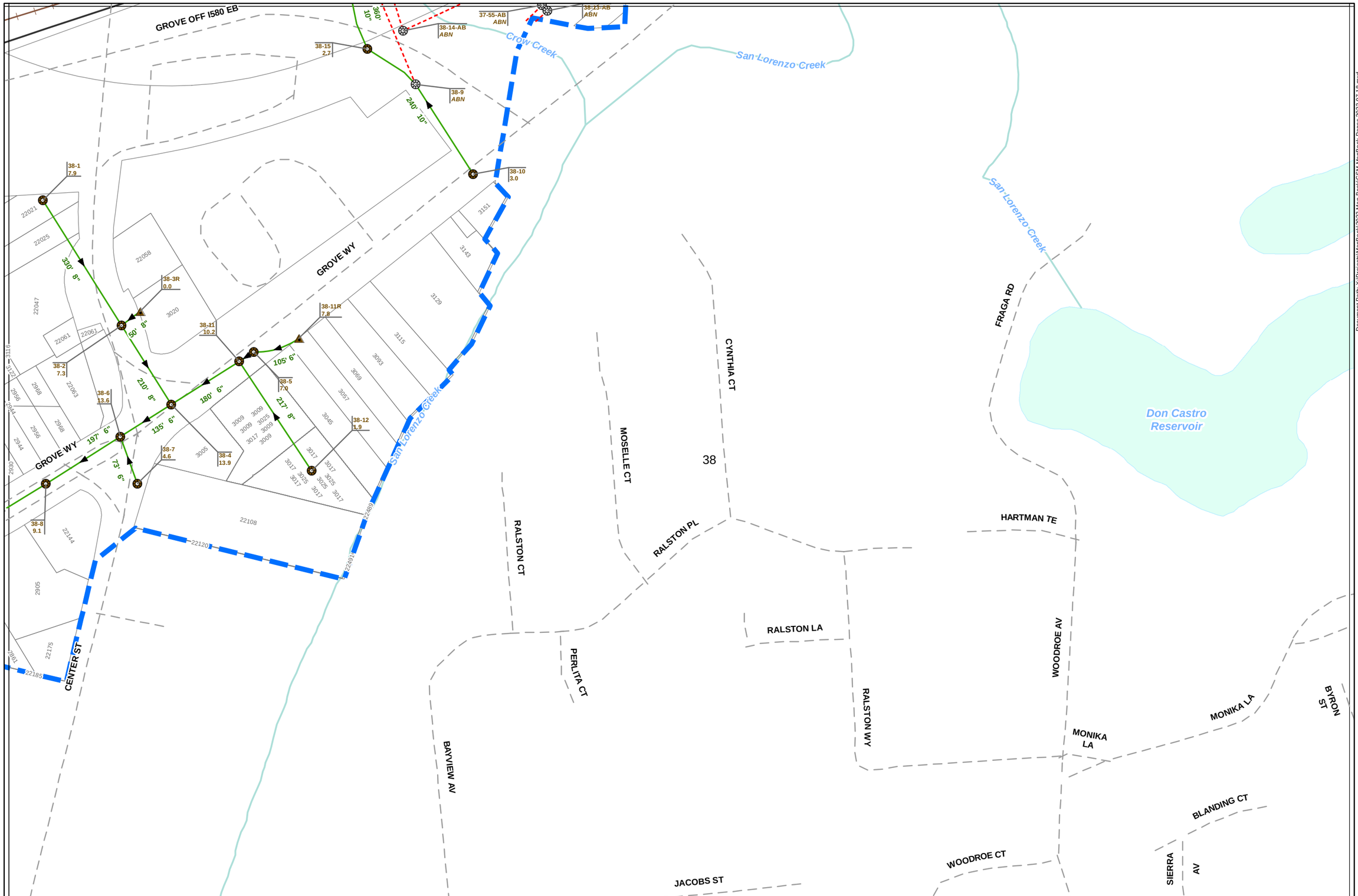

REV.

M. LEE
CVSan

Revision July 2022

Document Path: X:\Projects\MapBook\2022 Map Book\CSM MapBook Pages 2022-07-18.mxd

N

CASTRO VALLEY SANITARY DISTRICT SEWER SYSTEM FACILITIES

GRAPHIC SCALE 0 100 200 300

Scale: 1"= 200'

30	37	43
31	38	
32		

38

THE CASTRO VALLEY SANITARY DISTRICT ASSUMES NO LIABILITY FOR ERRORS OR OMISSIONS FOR UTILITY INFORMATION SHOWN ON THESE MAPS. ALL INFORMATION SHOULD BE FIELD VERIFIED.

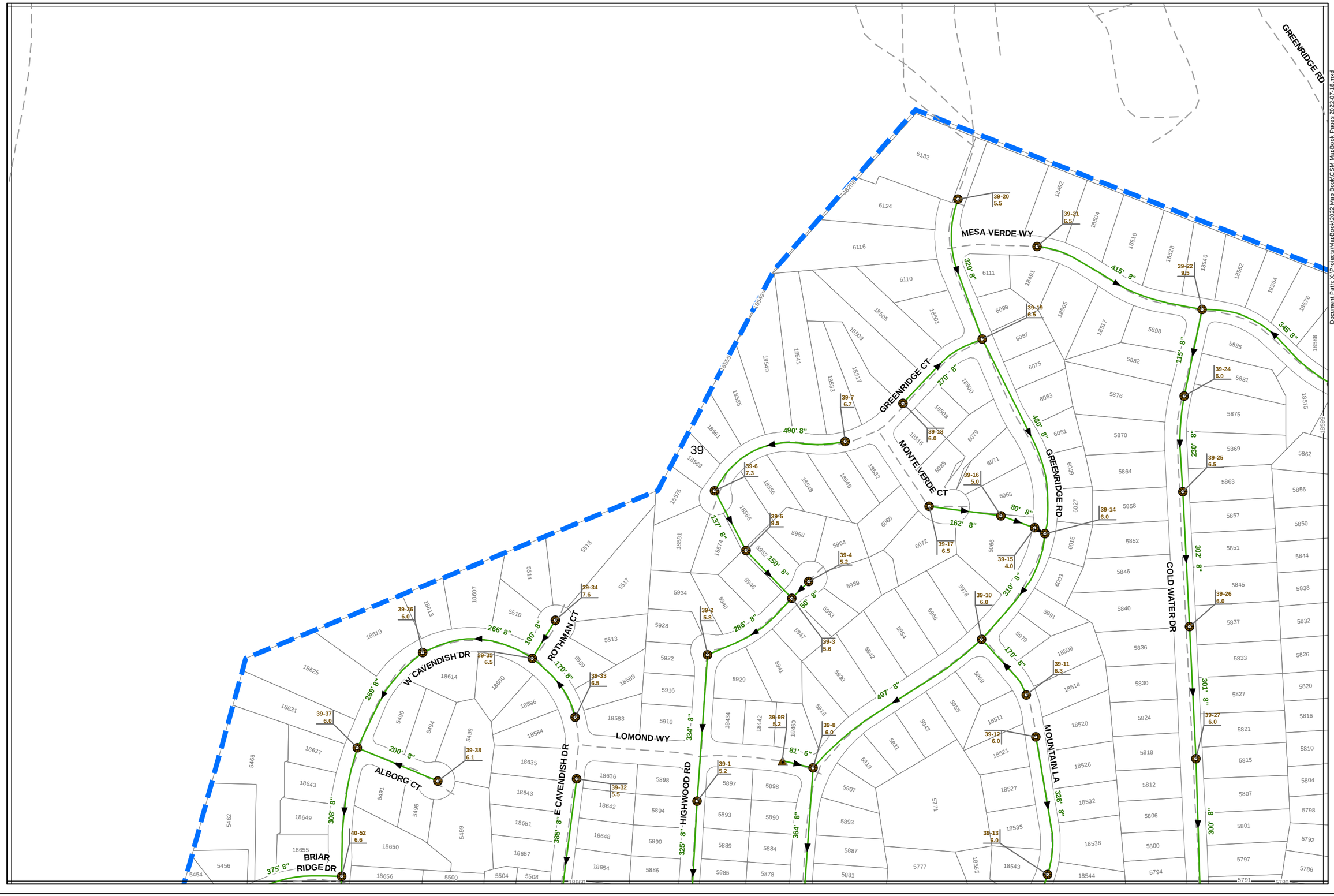

REV.

M. LEE
CVSan

Revision July 2022

Document Path: X:\Projects\MapBook\2022 Map Book\CSM MapBook Pages 2022-07-18.mxd

N

CASTRO VALLEY SANITARY DISTRICT SEWER SYSTEM FACILITIES

GRAPHIC SCALE
0 100 200 300

Scale: 1" = 200'

47		
33	39	55
34	40	44

39

THE CASTRO VALLEY SANITARY DISTRICT ASSUMES NO LIABILITY FOR ERRORS OR OMISSIONS FOR UTILITY INFORMATION SHOWN ON THESE MAPS. ALL INFORMATION SHOULD BE FIELD VERIFIED.

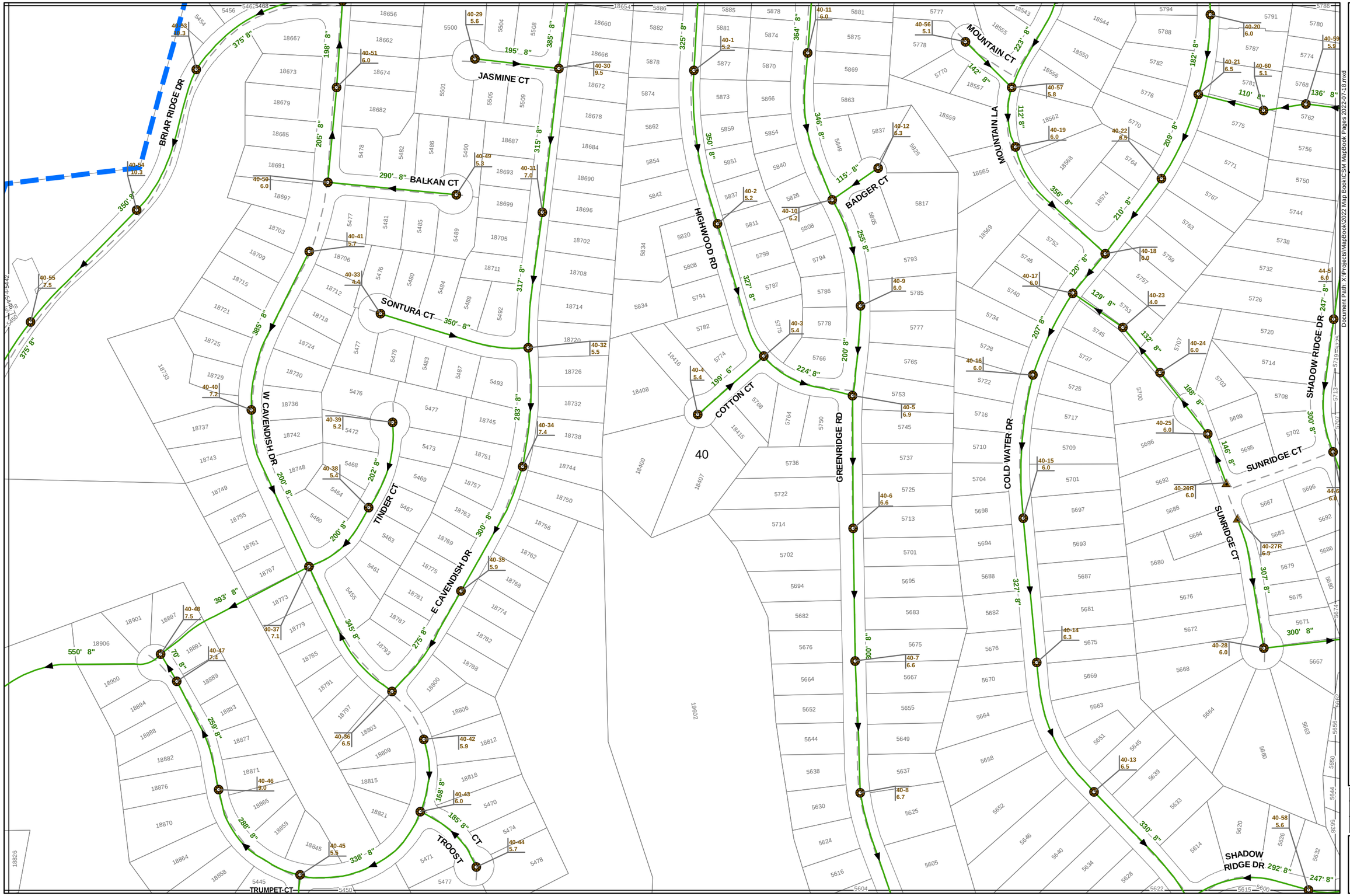

REV.

M. LEE
CVSan

Revision July 2022

Document Path: X:\Projects\MapBook\2022 Map Book\CSM MapBook Pages 2022-07-18.mxd

N

CASTRO VALLEY SANITARY DISTRICT
SEWER SYSTEM FACILITIES

GRAPHIC SCALE

0 100 200 300

Scale: 1"= 200'

33	39	55
34	40	44
35	41	45

40

THE CASTRO VALLEY SANITARY DISTRICT ASSUMES NO LIABILITY FOR ERRORS OR OMISSIONS FOR UTILITY INFORMATION SHOWN ON THESE MAPS. ALL INFORMATION SHOULD BE FIELD VERIFIED.

REV.

M. LEE
CVSan

Revision July 2022

N

CASTRO VALLEY SANITARY DISTRICT SEWER SYSTEM FACILITIES

GRAPHIC SCALE
0 100 200 300

Scale:
1" = 200'

34	40	44
35	41	45
36	42	46

41

Document Path: X:\Projects\MapBook\2022 Map Book\CSM MapBook Pages 2022-07-18.mxd

THE CASTRO VALLEY SANITARY DISTRICT ASSUMES NO LIABILITY FOR ERRORS OR OMISSIONS FOR UTILITY INFORMATION SHOWN ON THESE MAPS. ALL INFORMATION SHOULD BE FIELD VERIFIED.

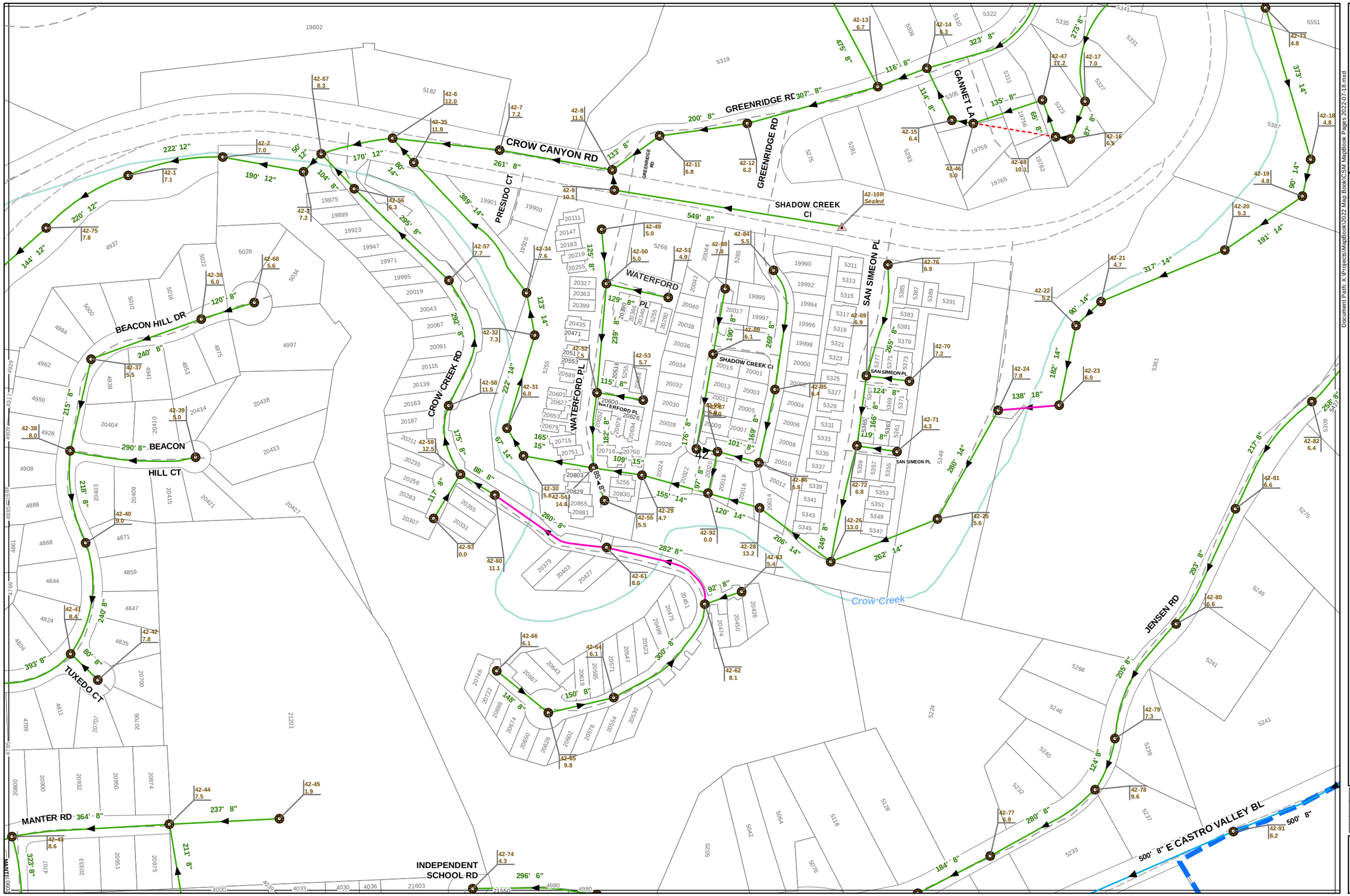

REV.

M. LEE
CVSan

Revision July 2022

Document Path: X:\Projects\MapBook\2022 Map Book\CSM MapBook Pages 2022-07-18.mxd

N

CASTRO VALLEY SANITARY DISTRICT SEWER SYSTEM FACILITIES

Scale: 1"= 200'

35	41	45
36	42	46
37	43	

42

THE CASTRO VALLEY SANITARY DISTRICT ASSUMES NO LIABILITY FOR ERRORS OR OMISSIONS FOR UTILITY INFORMATION SHOWN ON THESE MAPS. ALL INFORMATION SHOULD BE FIELD VERIFIED.

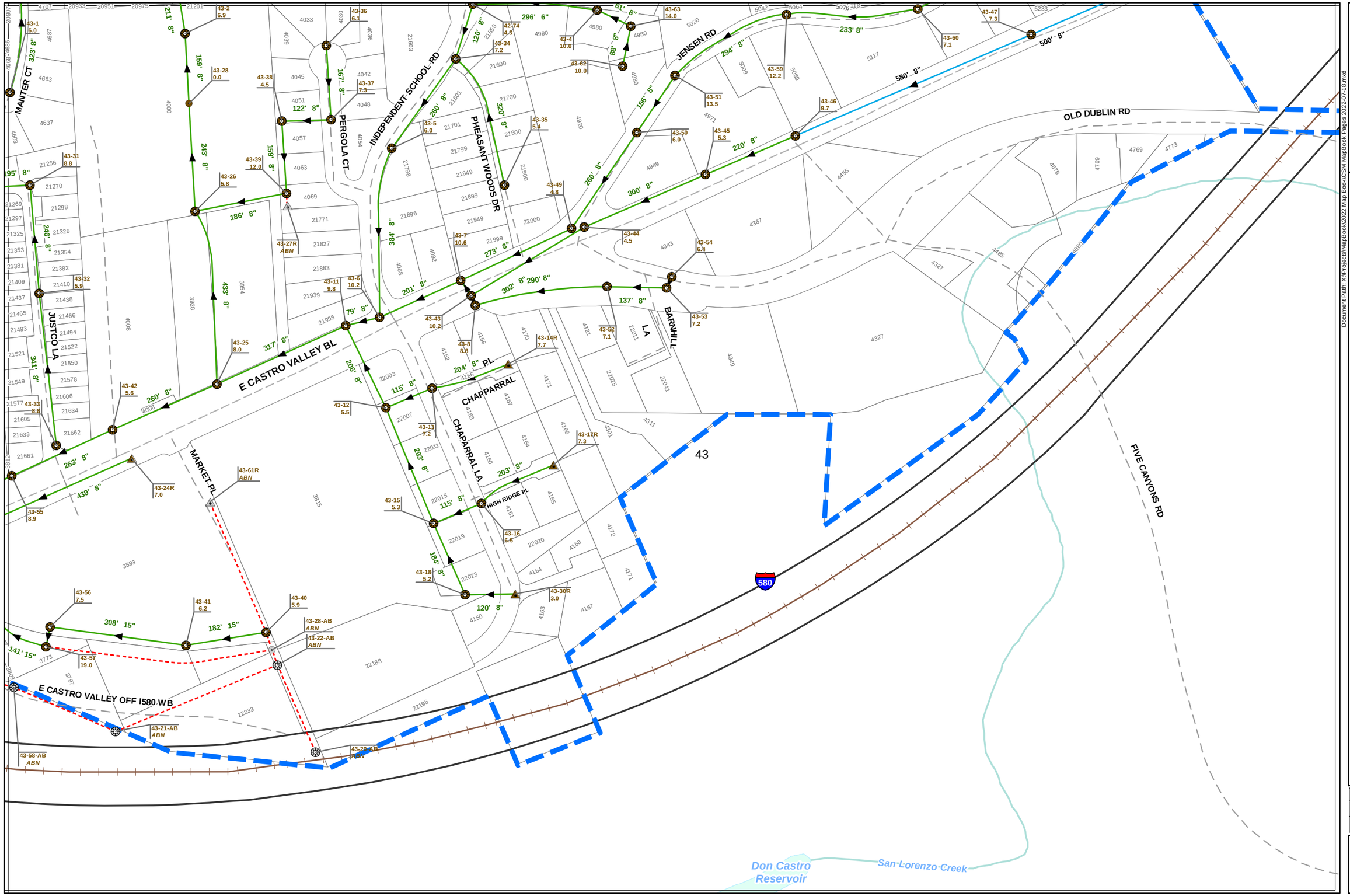

REV.

M. LEE
CVSan

Revision July 2022

Document Path: X:\Projects\MapBook\2022 Map Book\CSM MapBook Pages 2022-07-18.mxd

N

CASTRO VALLEY SANITARY DISTRICT
SEWER SYSTEM FACILITIES

GRAPHIC SCALE
0 100 200 300

Scale:
1" = 200'

36	42	46
37	43	
38		

43

THE CASTRO VALLEY SANITARY DISTRICT ASSUMES NO LIABILITY FOR ERRORS OR OMISSIONS FOR UTILITY INFORMATION SHOWN ON THESE MAPS. ALL INFORMATION SHOULD BE FIELD VERIFIED.

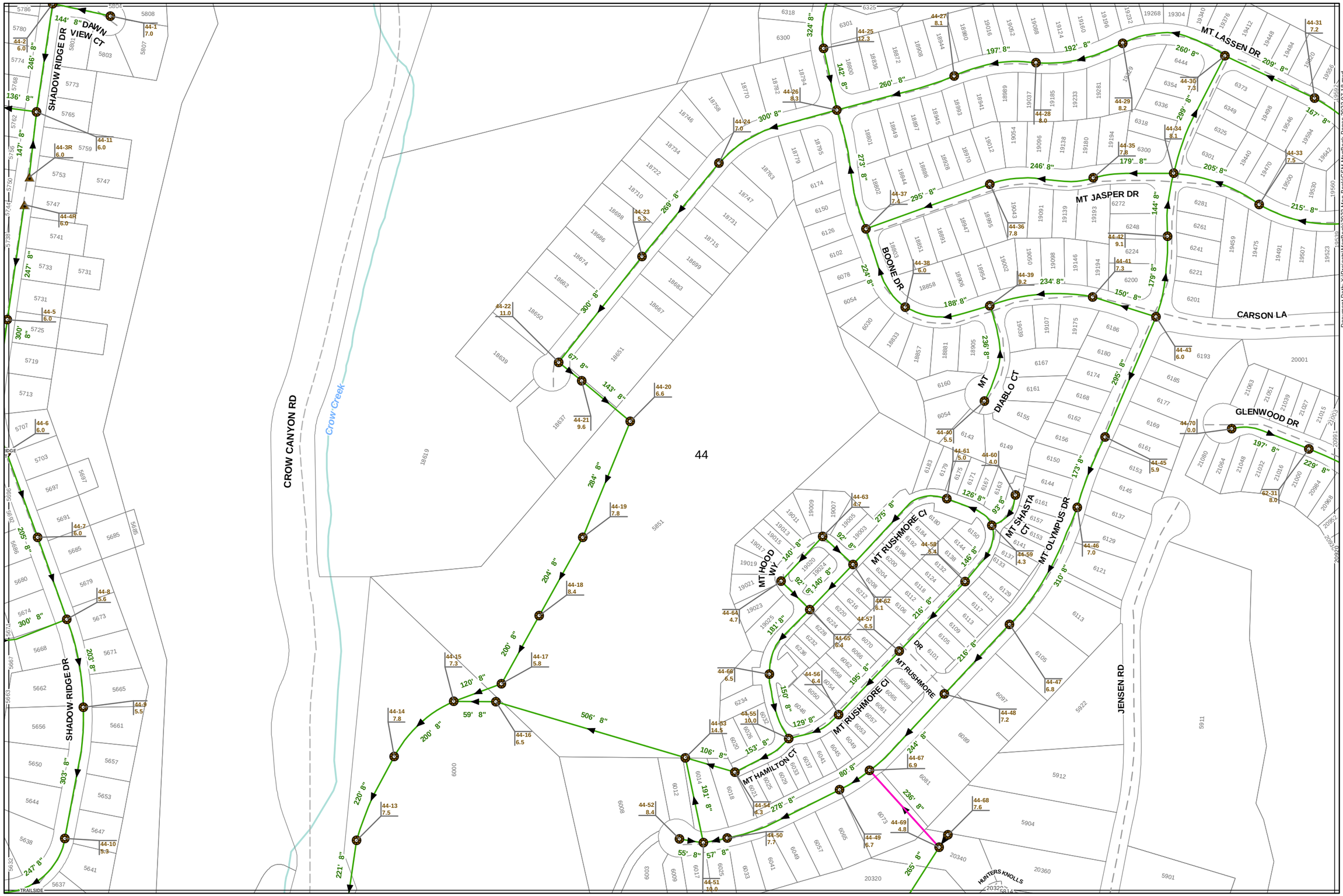

REV.

M. LEE
CVSan

Revision July 2022

Document Path: X:\Projects\MapBook\2022 Map Book\CSM MapBook Pages 2022-07-18.mxd

N

CASTRO VALLEY SANITARY DISTRICT SEWER SYSTEM FACILITIES

GRAPHIC SCALE 0 100 200 300

Scale: 1"= 200'

39	55	63
40	44	62
41	45	61

44

THE CASTRO VALLEY SANITARY DISTRICT ASSUMES NO LIABILITY FOR ERRORS OR OMISSIONS FOR UTILITY INFORMATION SHOWN ON THESE MAPS. ALL INFORMATION SHOULD BE FIELD VERIFIED.

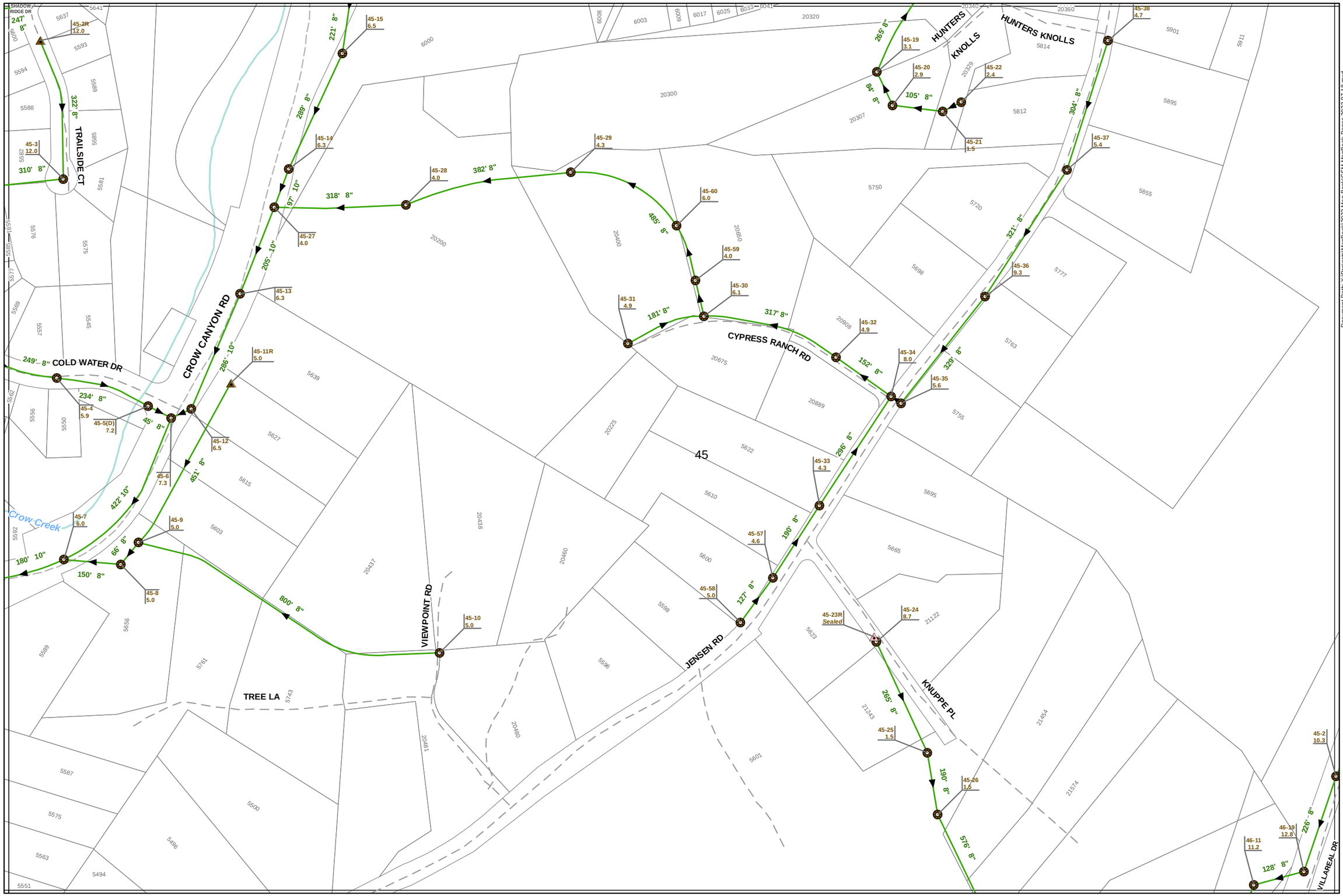

REV.

M. LEE
CVSan

Revision July 2022

Document Path: X:\Projects\MapBook\2022 Map Book\CSM MapBook Pages 2022-07-18.mxd

N

CASTRO VALLEY SANITARY DISTRICT SEWER SYSTEM FACILITIES

GRAPHIC SCALE
0 100 200 300

Scale:
1"= 200'

40	44	62
41	45	61
42	46	60

45

THE CASTRO VALLEY SANITARY DISTRICT ASSUMES NO LIABILITY FOR ERRORS OR OMISSIONS FOR UTILITY INFORMATION SHOWN ON THESE MAPS. ALL INFORMATION SHOULD BE FIELD VERIFIED.

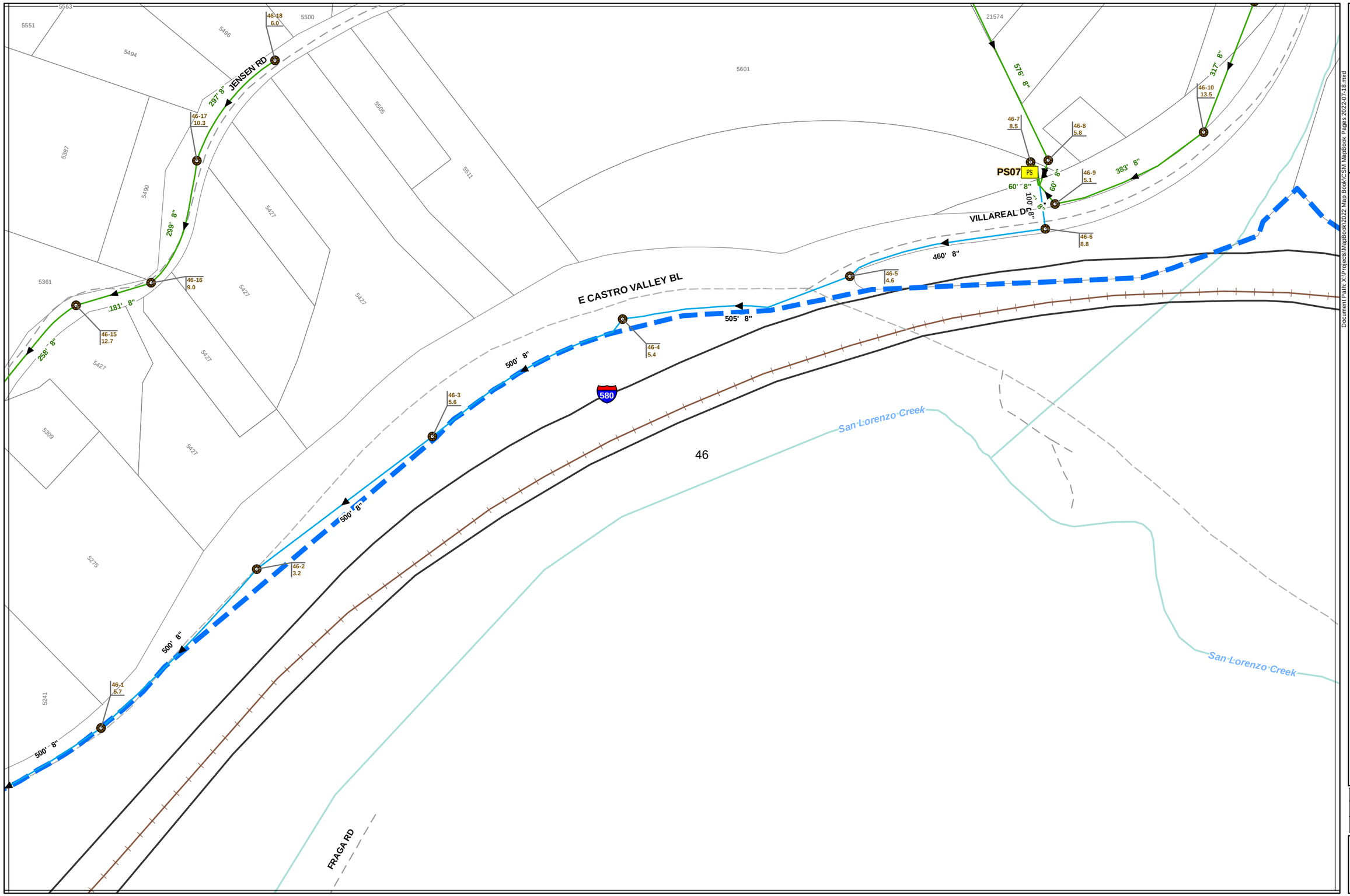

REV.

M. LEE
CVSan

Revision July 2022

Document Path: X:\Projects\MapBook\2022 Map Book\CSM MapBook Pages 2022-07-18.mxd

N

CASTRO VALLEY SANITARY DISTRICT SEWER SYSTEM FACILITIES

GRAPHIC SCALE
0 100 200 300

Scale:
1"= 200'

41	45	61
42	46	60
43		

46

THE CASTRO VALLEY SANITARY DISTRICT ASSUMES NO LIABILITY FOR ERRORS OR OMISSIONS FOR UTILITY INFORMATION SHOWN ON THESE MAPS. ALL INFORMATION SHOULD BE FIELD VERIFIED.

REV.

M. LEE
CVSan

Revision July 2022

Document Path: X:\Projects\MapBook\2022 Map Book\CSM MapBook Pages 2022-07-18.mxd

N

CASTRO VALLEY SANITARY DISTRICT SEWER SYSTEM FACILITIES

GRAPHIC SCALE 0 100 200 300

Scale: 1"= 200'

	48	
25	47	
26	33	39

47

THE CASTRO VALLEY SANITARY DISTRICT ASSUMES NO LIABILITY FOR ERRORS OR OMISSIONS FOR UTILITY INFORMATION SHOWN ON THESE MAPS. ALL INFORMATION SHOULD BE FIELD VERIFIED.

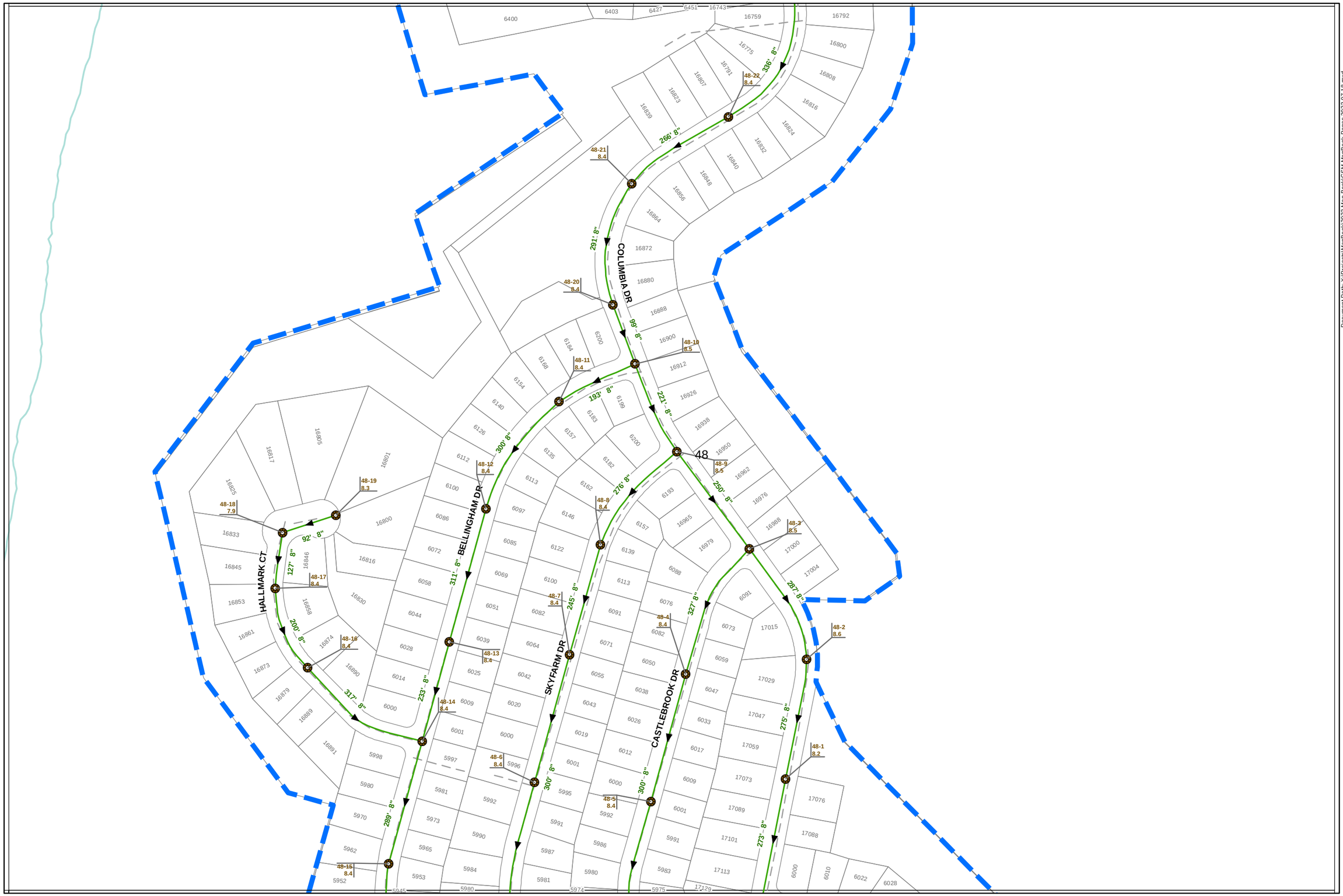

REV.

M. LEE
CVSan

Revision
July 2022

Document Path: X:\Projects\MapBook\2022 Map Book\CSM MapBook Pages 2022-07-18.mxd

N

GRAPHIC SCALE
0 100 200 300

Scale:
1" = 200'

CASTRO VALLEY SANITARY DISTRICT
SEWER SYSTEM FACILITIES

	49	
	48	
25	47	

48

THE CASTRO VALLEY SANITARY DISTRICT ASSUMES NO LIABILITY FOR ERRORS OR OMISSIONS FOR UTILITY INFORMATION SHOWN ON THESE MAPS. ALL INFORMATION SHOULD BE FIELD VERIFIED.

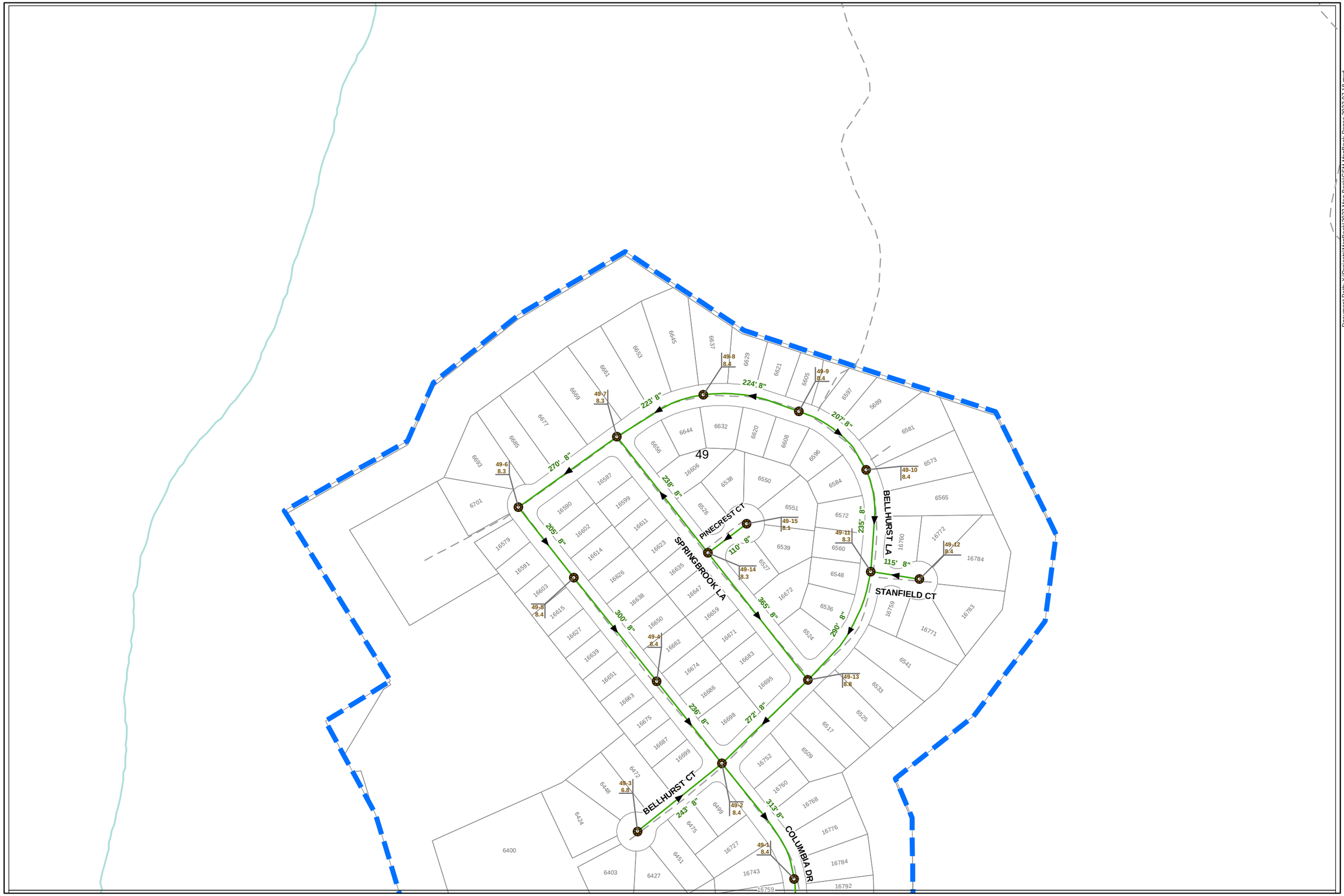

REV.

M. LEE
CVSan

Revision
July 2022

Document Path: X:\Projects\MapBook\2022 Map Book\CSM MapBook Pages 2022-07-18.mxd

N

CASTRO VALLEY SANITARY DISTRICT
SEWER SYSTEM FACILITIES

GRAPHIC SCALE
0 100 200 300

Scale:
1"= 200'

49	
48	

49

THE CASTRO VALLEY SANITARY DISTRICT ASSUMES NO LIABILITY FOR ERRORS OR OMISSIONS FOR UTILITY INFORMATION SHOWN ON THESE MAPS. ALL INFORMATION SHOULD BE FIELD VERIFIED.

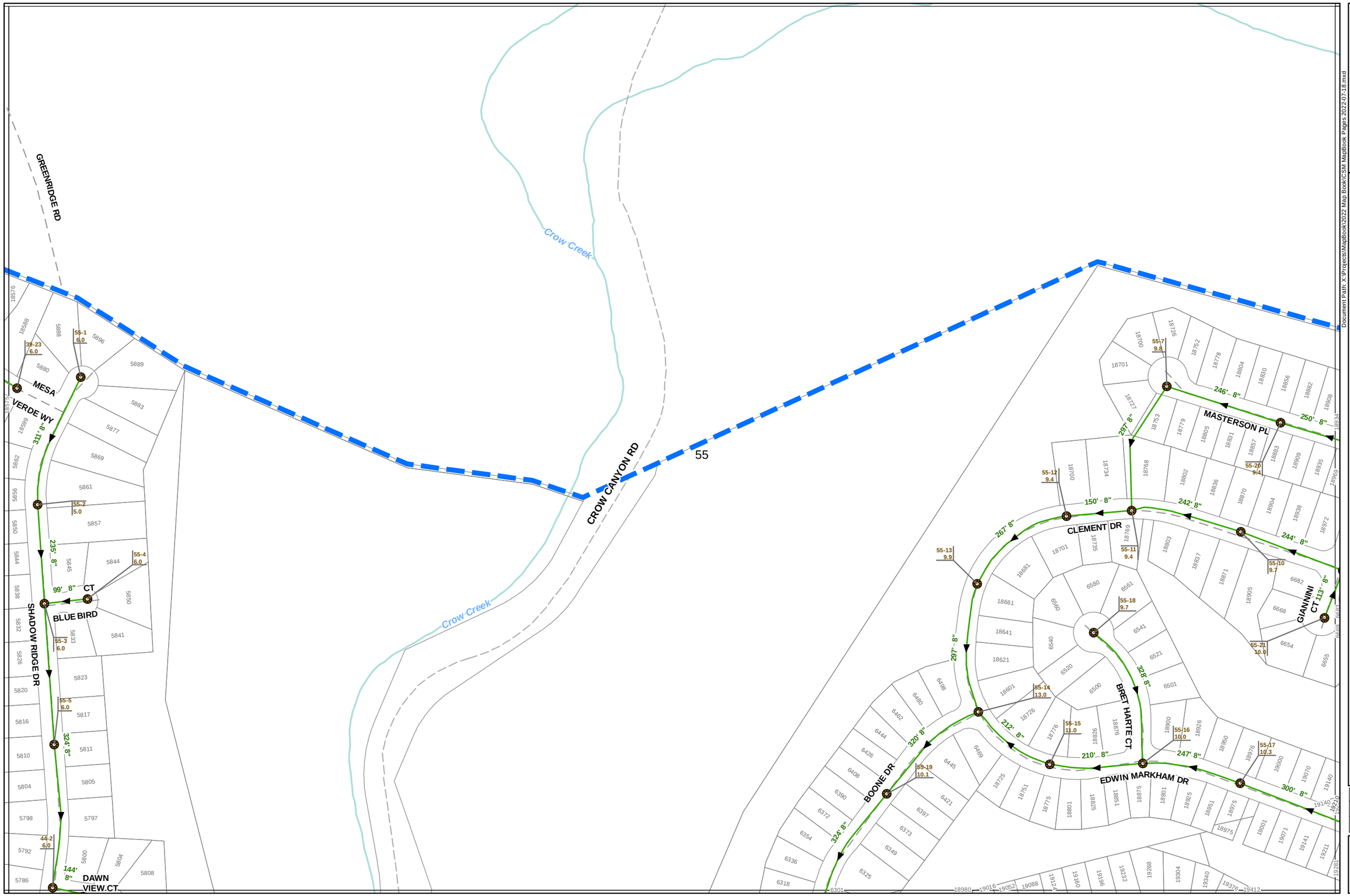

REV.

M. LEE
CVSan

Revision
July 2022

Document Path: X:\Projects\MapBook\2022 Map Book\CSM MapBook Pages 2022-07-18.mxd

N

CASTRO VALLEY SANITARY DISTRICT
SEWER SYSTEM FACILITIES

GRAPHIC SCALE
0 100 200 300

Scale:
1"= 200'

		64
39	55	63
40	44	62

55

THE CASTRO VALLEY SANITARY DISTRICT ASSUMES NO LIABILITY FOR ERRORS OR OMISSIONS FOR UTILITY INFORMATION SHOWN ON THESE MAPS. ALL INFORMATION SHOULD BE FIELD VERIFIED.

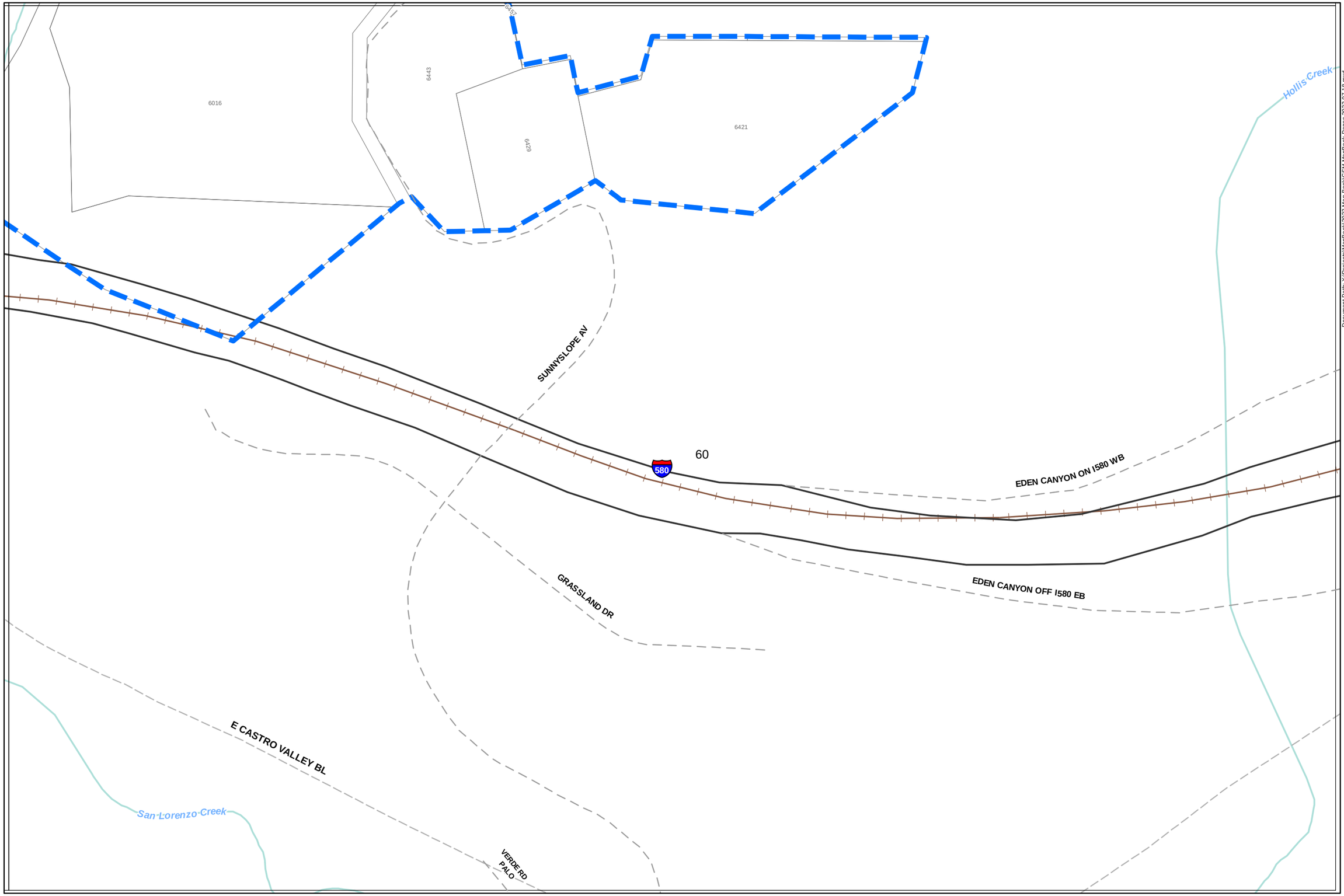

REV.

M. LEE
CVSan

Revision
July 2022

Document Path: X:\Projects\MapBook\2022 Map Book\CSM MapBook Pages 2022-07-18.mxd

N

CASTRO VALLEY SANITARY DISTRICT
SEWER SYSTEM FACILITIES

GRAPHIC SCALE
0 100 200 300

Scale:
1"= 200'

45	61	70
46	60	

60

THE CASTRO VALLEY SANITARY DISTRICT ASSUMES NO LIABILITY FOR ERRORS OR OMISSIONS FOR UTILITY INFORMATION SHOWN ON THESE MAPS. ALL INFORMATION SHOULD BE FIELD VERIFIED.

REV.

M. LEE
CVSan

Revision July 2022

Document Path: X:\Projects\MapBook\2022 Map Book\CSM MapBook Pages 2022-07-18.mxd

N

CASTRO VALLEY SANITARY DISTRICT
SEWER SYSTEM FACILITIES

GRAPHIC SCALE
0 100 200 300

Scale:
1"= 200'

44	62	71
45	**61**	70
46	60	

61

THE CASTRO VALLEY SANITARY DISTRICT ASSUMES NO LIABILITY FOR ERRORS OR OMISSIONS FOR UTILITY INFORMATION SHOWN ON THESE MAPS. ALL INFORMATION SHOULD BE FIELD VERIFIED.

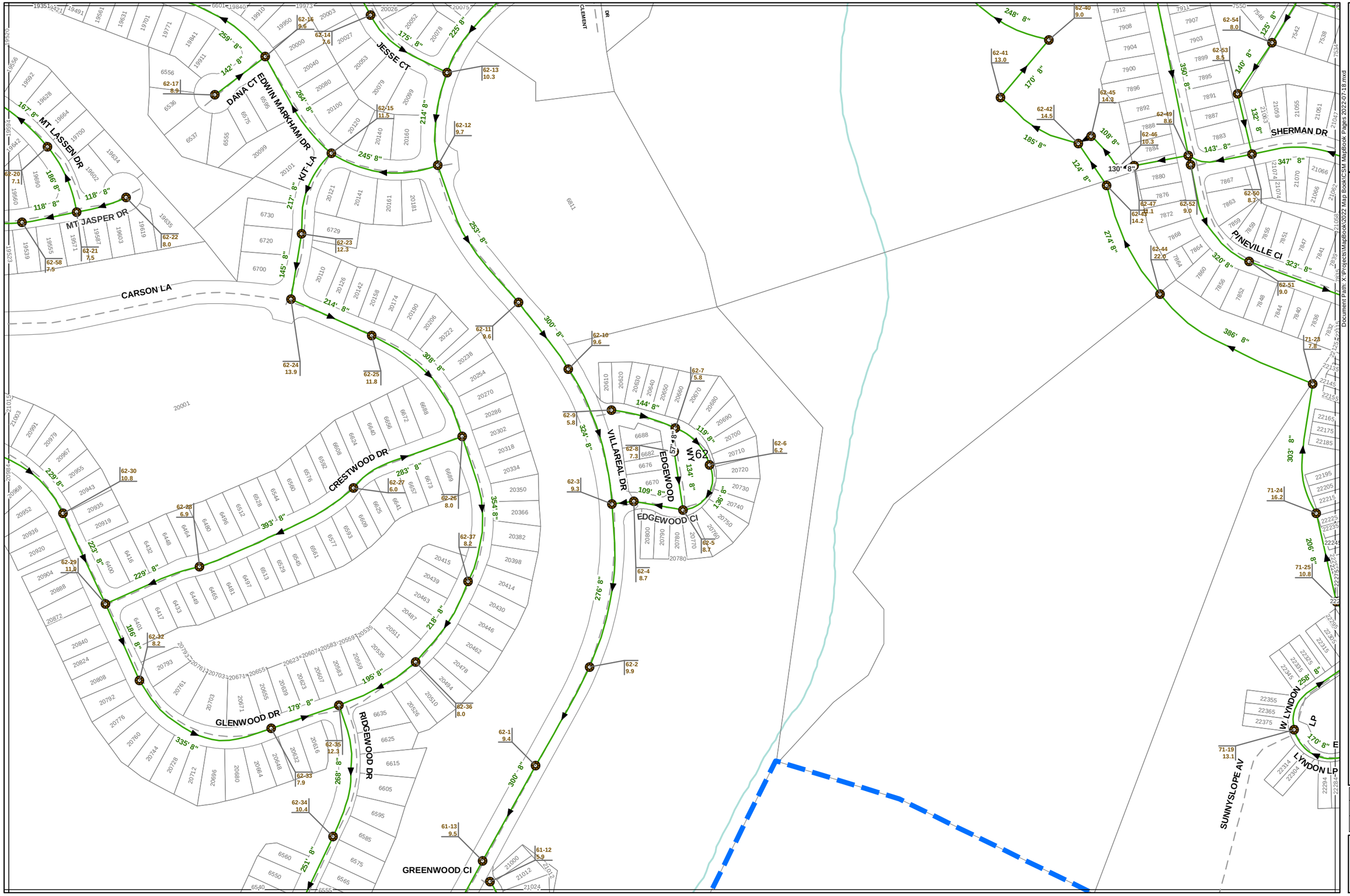

REV.

M. LEE
CVSan

Revision July 2022

N

CASTRO VALLEY SANITARY DISTRICT
SEWER SYSTEM FACILITIES

GRAPHIC SCALE
0 100 200 300

Scale:
1"= 200'

55	63	72
44	62	71
45	61	70

62

THE CASTRO VALLEY SANITARY DISTRICT ASSUMES NO LIABILITY FOR ERRORS OR OMISSIONS FOR UTILITY INFORMATION SHOWN ON THESE MAPS. ALL INFORMATION SHOULD BE FIELD VERIFIED.

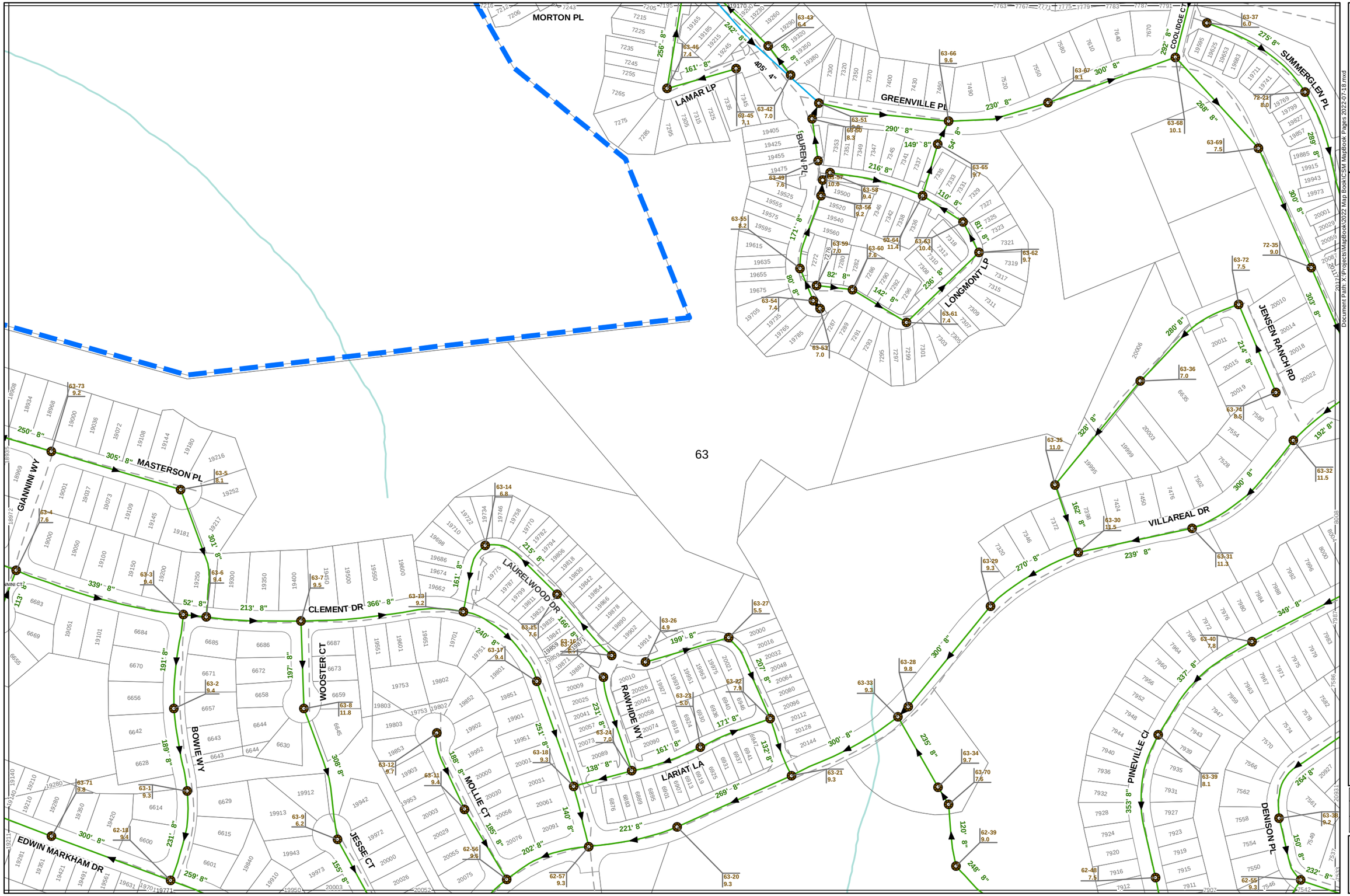

REV.

M. LEE
CVSan

Revision July 2022

Document Path: X:\Projects\MapBook\2022 Map Book\CSM MapBook Pages 2022-07-18.mxd

N

CASTRO VALLEY SANITARY DISTRICT
SEWER SYSTEM FACILITIES

GRAPHIC SCALE
0 100 200 300

Scale: 1"= 200'

	64	73
55	**63**	72
44	62	71

63

THE CASTRO VALLEY SANITARY DISTRICT ASSUMES NO LIABILITY FOR ERRORS OR OMISSIONS FOR UTILITY INFORMATION SHOWN ON THESE MAPS. ALL INFORMATION SHOULD BE FIELD VERIFIED.

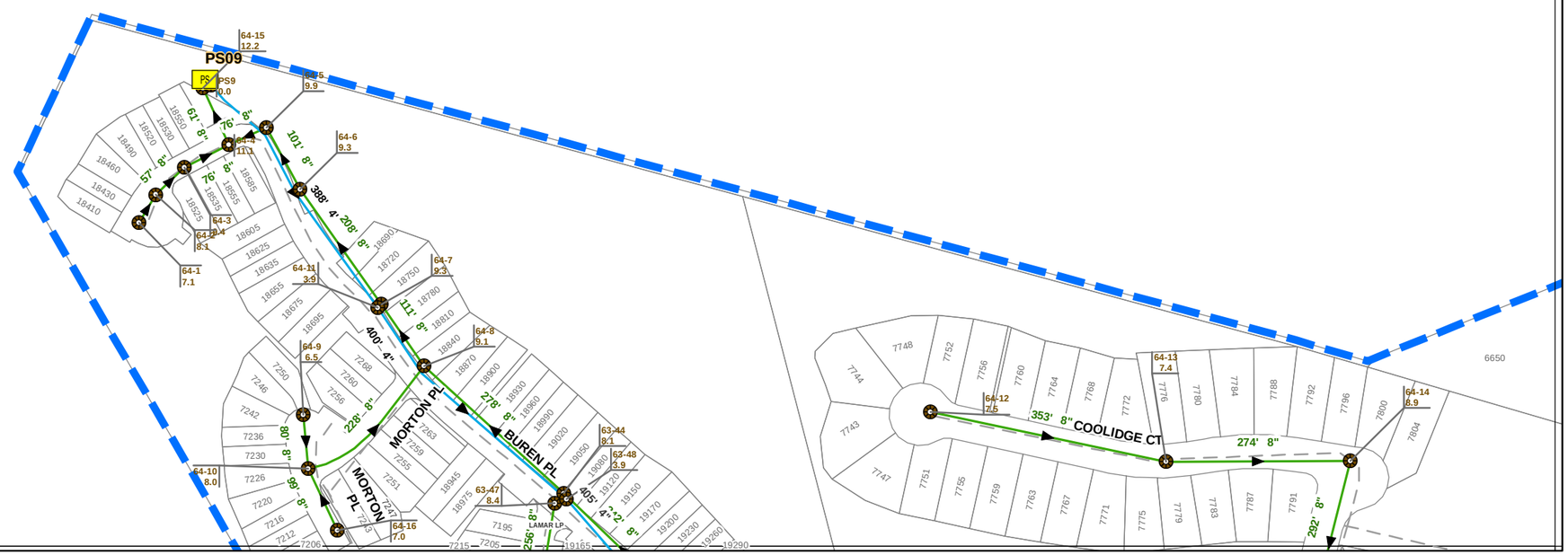

REV.

M. LEE
CVSan

Revision
July 2022

Document Path: X:\Projects\MapBook\2022 Map Book\CSM MapBook Pages 2022-07-18.mxd

N

GRAPHIC SCALE
0 100 200 300

Scale:
1" = 200'

	64	73
55	63	72

CASTRO VALLEY SANITARY DISTRICT
SEWER SYSTEM FACILITIES

64

THE CASTRO VALLEY SANITARY DISTRICT ASSUMES NO LIABILITY FOR ERRORS OR OMISSIONS FOR UTILITY INFORMATION SHOWN ON THESE MAPS. ALL INFORMATION SHOULD BE FIELD VERIFIED.

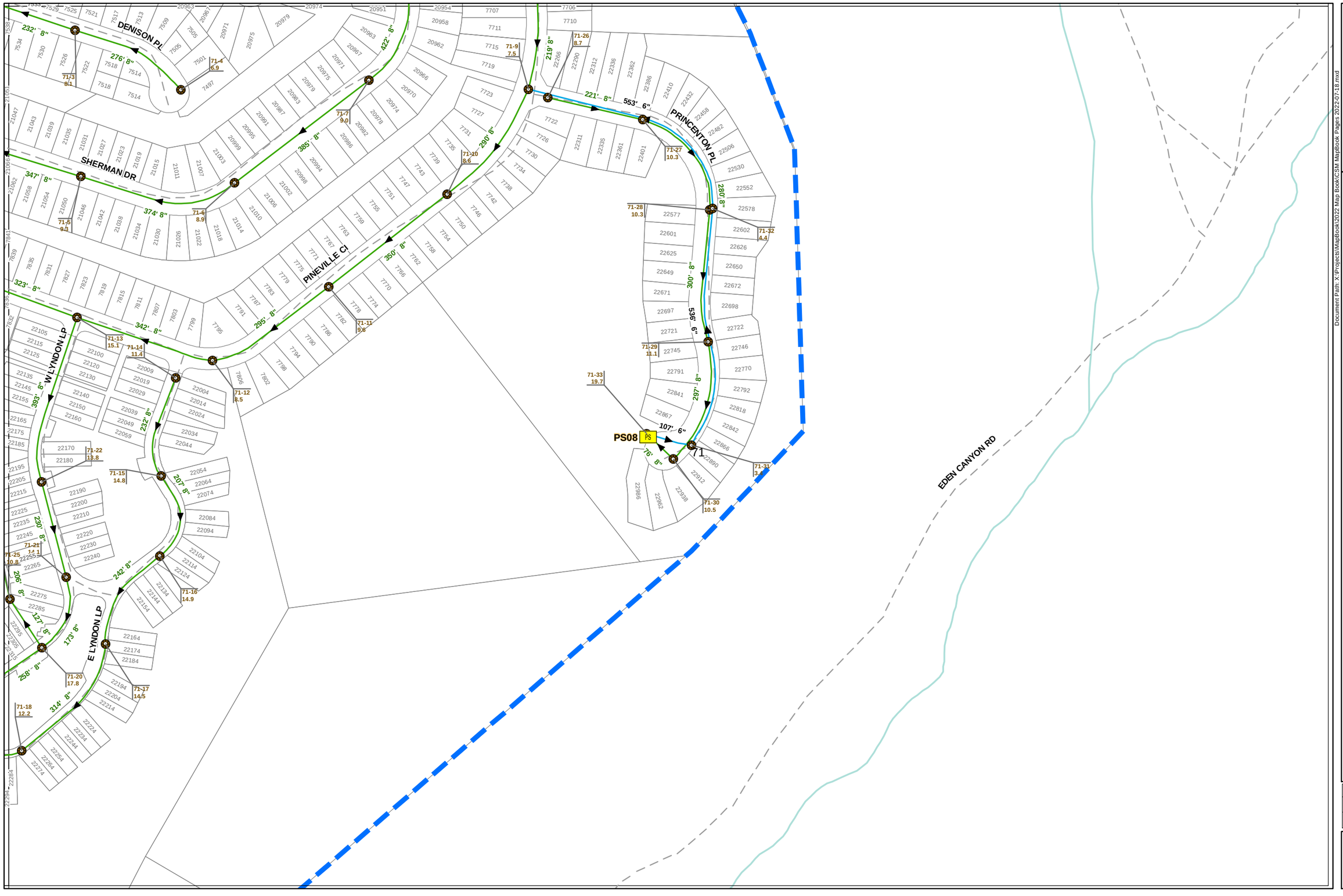

REV.

M. LEE
CVSan

Revision July 2022

Document Path: X:\Projects\MapBook\2022 Map Book\CSM MapBook Pages 2022-07-18.mxd

N

CASTRO VALLEY SANITARY DISTRICT
SEWER SYSTEM FACILITIES

GRAPHIC SCALE
0 100 200 300

Scale:
1" = 200'

63	72	
62	71	
61	70	

71

THE CASTRO VALLEY SANITARY DISTRICT ASSUMES NO LIABILITY FOR ERRORS OR OMISSIONS FOR UTILITY INFORMATION SHOWN ON THESE MAPS. ALL INFORMATION SHOULD BE FIELD VERIFIED.

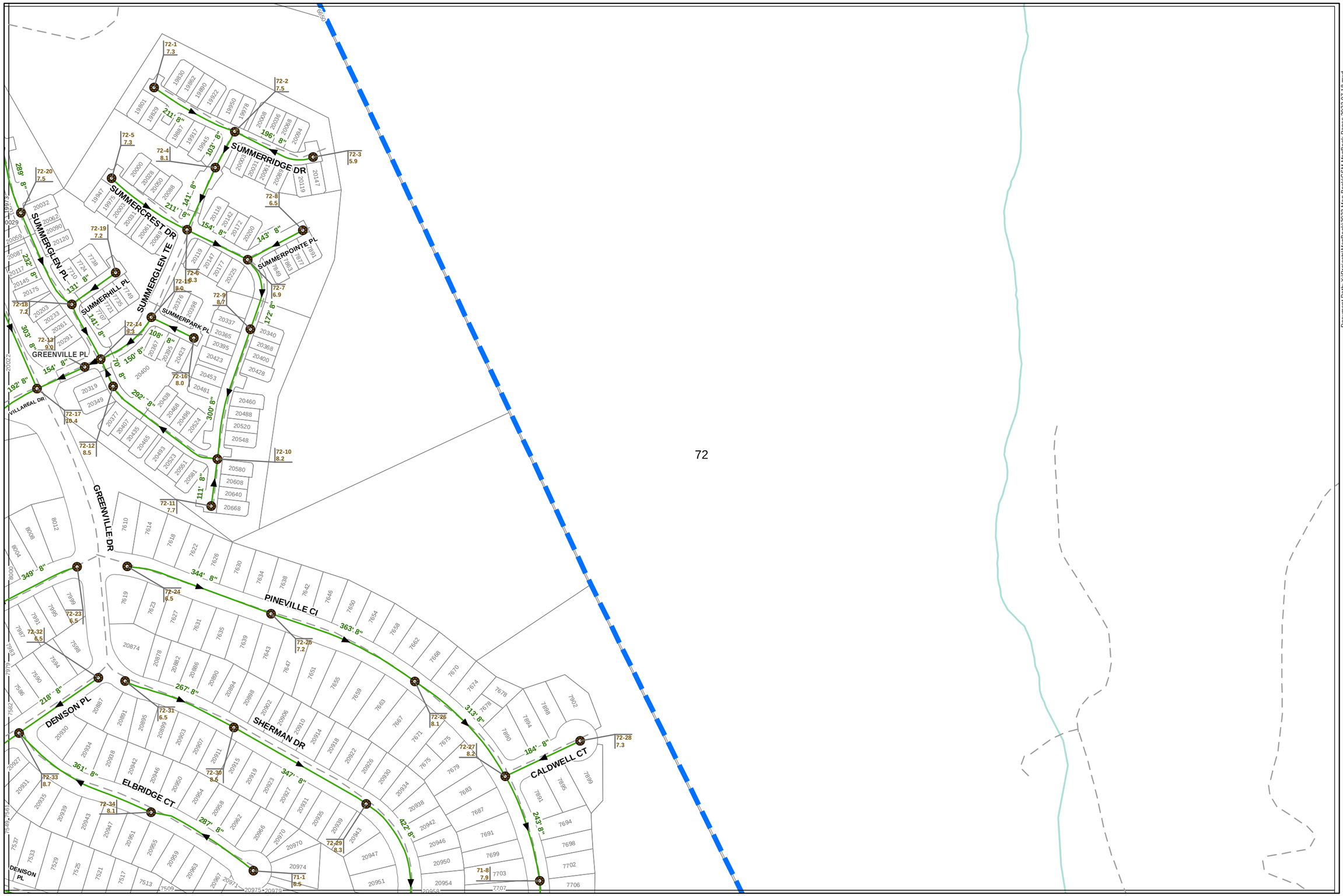

REV.

M. LEE
CVSan

Revision July 2022

Document Path: X:\Projects\MapBook\2022 Map Book\CSM MapBook Pages 2022-07-18.mxd

N

GRAPHIC SCALE
0 100 200 300

Scale:
1"= 200'

64	73	
63	72	
62	71	

CASTRO VALLEY SANITARY DISTRICT
SEWER SYSTEM FACILITIES

72

THE CASTRO VALLEY SANITARY DISTRICT ASSUMES NO LIABILITY FOR ERRORS OR OMISSIONS FOR UTILITY INFORMATION SHOWN ON THESE MAPS. ALL INFORMATION SHOULD BE FIELD VERIFIED.

(THIS PAGE INTENTIONALLY LEFT BLANK)

APPENDIX D

Collection System Asset Inventory

Appendix D - GIS Collection System Asset Inventory

Pipe Rec #	Pipe ID	US Structure	DS Structure	Length (ft)	Diameter (in)	Material	Sewer Type	Status	Install Date	Flow Basin
2	10-1_3-68	10-1	3-68	232	8	VITRIFIED CLAY PIPE	SANITARY SEWER	Active	1/1/1951	BASIN 2
3	10-10_10-12	10-10	10-12	108	8	VITRIFIED CLAY PIPE	SANITARY SEWER	Active	1/1/1955	BASIN 2
4	10-100R_10-99	10-100R	10-99	58	6	VITRIFIED CLAY PIPE	SANITARY SEWER	Active	1/1/1955	BASIN 2
5	10-101_10-64	10-101	10-64	434	8	VITRIFIED CLAY PIPE	SANITARY SEWER	Active	1/1/1954	BASIN 2
6	10-102_10-101	10-102	10-101	194	8	VITRIFIED CLAY PIPE	SANITARY SEWER	Active	1/1/1960	BASIN 2
7	10-103R_10-46	10-103R	10-46	70	8	VITRIFIED CLAY PIPE	SANITARY SEWER	Active		BASIN 2
8	10-104_10-115	10-104	10-115	121	8	VITRIFIED CLAY PIPE	SANITARY SEWER	Active	1/1/1951	BASIN 2
9	10-105_10-89	10-105	10-89	182	8	VITRIFIED CLAY PIPE	SANITARY SEWER	Active	1/1/1954	BASIN 2
10	10-106_11-7	10-106	11-7	260	6	VITRIFIED CLAY PIPE	SANITARY SEWER	Active	1/1/1944	BASIN 2
11	10-107_10-55	10-107	10-55	22	8	VITRIFIED CLAY PIPE	SANITARY SEWER	Active	1/1/1952	BASIN 2
12	10-108_10-50	10-108	10-50	166	8	VITRIFIED CLAY PIPE	SANITARY SEWER	Active	1/1/1980	BASIN 2
13	10-109_10-108	10-109	10-108	60	8	VITRIFIED CLAY PIPE	SANITARY SEWER	Active	1/1/1980	BASIN 2
14	10-11_10-10	10-11	10-10	110	8	VITRIFIED CLAY PIPE	SANITARY SEWER	Active	1/1/1955	BASIN 2
16	10-110_10-130	10-110	10-130	265	6	VITRIFIED CLAY PIPE	SANITARY SEWER	Active	1/1/1987	BASIN 3
17	10-111_10-110	10-111	10-110	240	8	VITRIFIED CLAY PIPE	SANITARY SEWER	Active	1/1/1987	BASIN 3
18	10-112_10-111	10-112	10-111	144	8	VITRIFIED CLAY PIPE	SANITARY SEWER	Active	1/1/1987	BASIN 3
19	10-113_10-65	10-113	10-65	241	6	VITRIFIED CLAY PIPE	SANITARY SEWER	Active	1/1/1954	BASIN 2
20	10-114_10-102	10-114	10-102	154	8	VITRIFIED CLAY PIPE	SANITARY SEWER	Active	1/1/1960	BASIN 2
21	10-115_3-62	10-115	3-62	132	8	VITRIFIED CLAY PIPE	SANITARY SEWER	Active	1/1/1951	BASIN 2
22	10-116R_10-26	10-116R	10-26	317	6	VITRIFIED CLAY PIPE	SANITARY SEWER	Active	1/1/1944	BASIN 3
23	10-117R_10-118	10-117R	10-118	27	6	VITRIFIED CLAY PIPE	SANITARY SEWER	Active		BASIN 4
24	10-118_10-119	10-118	10-119	94	6	VITRIFIED CLAY PIPE	SANITARY SEWER	Active		BASIN 4
25	10-119_10-120	10-119	10-120	125	6	VITRIFIED CLAY PIPE	SANITARY SEWER	Active		BASIN 4
26	10-12_10-13	10-12	10-13	202	8	VITRIFIED CLAY PIPE	SANITARY SEWER	Active	1/1/1955	BASIN 2
27	10-120_10-121	10-120	10-121	20	6	VITRIFIED CLAY PIPE	SANITARY SEWER	Active	1/1/1949	BASIN 4
28	10-121_11-95	10-121	11-95	214	6	VITRIFIED CLAY PIPE	SANITARY SEWER	Active	1/1/1949	BASIN 4
29	10-124_11-121	10-124	11-121	273	12	VITRIFIED CLAY PIPE	SANITARY SEWER	Active	9/1/2009	BASIN 2
30	10-125_10-124	10-125	10-124	82	12	VITRIFIED CLAY PIPE	SANITARY SEWER	Active	9/1/2009	BASIN 2
31	10-126_10-139	10-126	10-139	119	12	VITRIFIED CLAY PIPE	SANITARY SEWER	Active	9/1/2009	BASIN 2
32	10-127_10-126	10-127	10-126	281	12	VITRIFIED CLAY PIPE	SANITARY SEWER	Active	9/1/2009	BASIN 2
33	10-128_10-127	10-128	10-127	40	8	VITRIFIED CLAY PIPE	SANITARY SEWER	Active	9/1/2009	BASIN 2
34	10-129_10-127	10-129	10-127	100	12	VITRIFIED CLAY PIPE	SANITARY SEWER	Active	9/1/2009	BASIN 2
35	10-13_10-15	10-13	10-15	110	8	VITRIFIED CLAY PIPE	SANITARY SEWER	Active	1/1/1955	BASIN 2
36	10-130_10-30	10-130	10-30	41	8	VITRIFIED CLAY PIPE	SANITARY SEWER	Active	9/1/2009	BASIN 3
37	10-131_11-123	10-131	11-123	213	12	VITRIFIED CLAY PIPE	SANITARY SEWER	Active	9/1/2009	BASIN 2
38	10-132_10-131	10-132	10-131	105	12	VITRIFIED CLAY PIPE	SANITARY SEWER	Active	9/1/2009	BASIN 2
41	10-133_10-132	10-133	10-132	349	12	VITRIFIED CLAY PIPE	SANITARY SEWER	Active	9/1/2009	BASIN 2
42	10-134_10-133	10-134	10-133	298	12	VITRIFIED CLAY PIPE	SANITARY SEWER	Active	9/1/2009	BASIN 2
43	10-135_10-134	10-135	10-134	115	12	VITRIFIED CLAY PIPE	SANITARY SEWER	Active	9/1/2009	BASIN 2
44	10-135_10-74	10-135	10-74	334	8	VITRIFIED CLAY PIPE	SANITARY SEWER	Active	1/1/1950	BASIN 2
45	10-136_10-135	10-136	10-135	229	12	VITRIFIED CLAY PIPE	SANITARY SEWER	Active	9/1/2009	BASIN 2
46	10-137_10-136	10-137	10-136	41	12	VITRIFIED CLAY PIPE	SANITARY SEWER	Active	9/1/2009	BASIN 2
47	10-137_10-138	10-137	10-138	275	10	VITRIFIED CLAY PIPE	SANITARY SEWER	Active	1/1/1964	BASIN 2
48	10-138_10-74	10-138	10-74	275	10	VITRIFIED CLAY PIPE	SANITARY SEWER	Active	1/1/1964	BASIN 2
49	10-139_10-125	10-139	10-125	296	12	VITRIFIED CLAY PIPE	SANITARY SEWER	Active	9/1/2009	BASIN 2
50	10-14_10-13	10-14	10-13	103	8	VITRIFIED CLAY PIPE	SANITARY SEWER	Active	1/1/1954	BASIN 2
51	10-15_10-59	10-15	10-59	123	8	VITRIFIED CLAY PIPE	SANITARY SEWER	Active	1/1/1955	BASIN 2
52	10-16_10-22	10-16	10-22	430	8	VITRIFIED CLAY PIPE	SANITARY SEWER	Active	1/1/1952	BASIN 3
53	10-17_10-18	10-17	10-18	341	8	VITRIFIED CLAY PIPE	SANITARY SEWER	Active	1/1/1952	BASIN 3
54	10-18_10-19	10-18	10-19	200	8	VITRIFIED CLAY PIPE	SANITARY SEWER	Active	1/1/1952	BASIN 3
55	10-19_10-20	10-19	10-20	432	8	VITRIFIED CLAY PIPE	SANITARY SEWER	Active	1/1/1952	BASIN 3
56	10-2_10-1	10-2	10-1	100	8	VITRIFIED CLAY PIPE	SANITARY SEWER	Active	1/1/1951	BASIN 2
57	10-20_10-23	10-20	10-23	267	12	VITRIFIED CLAY PIPE	SANITARY SEWER	Active	9/1/2009	BASIN 3
58	10-21_10-20	10-21	10-20	182	8	VITRIFIED CLAY PIPE	SANITARY SEWER	Active	1/1/1952	BASIN 3
59	10-22_10-21	10-22	10-21	246	8	VITRIFIED CLAY PIPE	SANITARY SEWER	Active	1/1/1952	BASIN 3
60	10-23_10-129	10-23	10-129	248	12	VITRIFIED CLAY PIPE	SANITARY SEWER	Active	9/1/2009	BASIN 3
61	10-25_10-110	10-25	10-110	64	6	VITRIFIED CLAY PIPE	SANITARY SEWER	Active	1/1/1944	BASIN 3
62	10-26_10-25	10-26	10-25	415	6	VITRIFIED CLAY PIPE	SANITARY SEWER	Active	1/1/1944	BASIN 3
63	10-27_10-26	10-27	10-26	500	8	VITRIFIED CLAY PIPE	SANITARY SEWER	Active	1/1/1952	BASIN 3
66	10-28_10-27	10-28	10-27	400	8	VITRIFIED CLAY PIPE	SANITARY SEWER	Active	1/1/1952	BASIN 3
67	10-29_10-28	10-29	10-28	145	8	VITRIFIED CLAY PIPE	SANITARY SEWER	Active	1/1/1952	BASIN 3
71	10-3_10-1	10-3	10-1	176	8	VITRIFIED CLAY PIPE	SANITARY SEWER	Active	1/1/1951	BASIN 2
72	10-30_10-31	10-30	10-31	212	10	VITRIFIED CLAY PIPE	SANITARY SEWER	Active	1/1/1952	BASIN 3
73	10-31_10-32	10-31	10-32	58	10	VITRIFIED CLAY PIPE	SANITARY SEWER	Active	1/1/1952	BASIN 3
74	10-32_10-33	10-32	10-33	39	10	VITRIFIED CLAY PIPE	SANITARY SEWER	Active	1/1/1952	BASIN 3
75	10-33_10-34	10-33	10-34	206	10	VITRIFIED CLAY PIPE	SANITARY SEWER	Active	1/1/1952	BASIN 3
76	10-34_11-76	10-34	11-76	173	10	VITRIFIED CLAY PIPE	SANITARY SEWER	Active	1/1/1952	BASIN 3
77	10-36_11-77	10-36	11-77	243	8	VITRIFIED CLAY PIPE	SANITARY SEWER	Active	1/1/1954	BASIN 3
78	10-37_10-36	10-37	10-36	307	8	VITRIFIED CLAY PIPE	SANITARY SEWER	Active	1/1/1952	BASIN 3
79	10-38R_10-37	10-38R	10-37	74	8	VITRIFIED CLAY PIPE	SANITARY SEWER	Active	1/1/1954	BASIN 3

80	10-39_10-31	10-39	10-31	135	8	VITRIFIED CLAY PIPE	SANITARY SEWER	Active	1/1/1954	BASIN 3
81	10-4_10-3	10-4	10-3	100	8	VITRIFIED CLAY PIPE	SANITARY SEWER	Active	1/1/1951	BASIN 2
82	10-41_10-39	10-41	10-39	246	8	VITRIFIED CLAY PIPE	SANITARY SEWER	Active		BASIN 3
84	10-42R_10-41	10-42R	10-41	65	8	VITRIFIED CLAY PIPE	SANITARY SEWER	Active	1/1/1954	BASIN 3
85	10-43_10-41	10-43	10-41	136	8	VITRIFIED CLAY PIPE	SANITARY SEWER	Active	1/1/1954	BASIN 3
86	10-44R_10-43	10-44R	10-43	99	8	VITRIFIED CLAY PIPE	SANITARY SEWER	Active	1/1/1954	BASIN 3
87	10-45_11-89	10-45	11-89	410	6	VITRIFIED CLAY PIPE	SANITARY SEWER	Active	1/1/1954	BASIN 3
88	10-46_10-106	10-46	10-106	70	8	VITRIFIED CLAY PIPE	SANITARY SEWER	Active		BASIN 2
89	10-47_10-48	10-47	10-48	305	10	VITRIFIED CLAY PIPE	SANITARY SEWER	Active	1/1/1954	BASIN 2
90	10-48_11-122	10-48	11-122	395	10	VITRIFIED CLAY PIPE	SANITARY SEWER	Active	1/1/1954	BASIN 2
91	10-49_10-124	10-49	10-124	33	8	VITRIFIED CLAY PIPE	SANITARY SEWER	Active	9/1/2009	BASIN 2
92	10-5_10-4	10-5	10-4	190	8	VITRIFIED CLAY PIPE	SANITARY SEWER	Active	1/1/1951	BASIN 2
94	10-50_10-49	10-50	10-49	272	8	VITRIFIED CLAY PIPE	SANITARY SEWER	Active	1/1/1959	BASIN 2
95	10-54_10-128	10-54	10-128	171	8	VITRIFIED CLAY PIPE	SANITARY SEWER	Active	1/1/1952	BASIN 2
97	10-55_10-54	10-55	10-54	136	8	VITRIFIED CLAY PIPE	SANITARY SEWER	Active	1/1/1952	BASIN 2
98	10-56_10-107	10-56	10-107	105	8	VITRIFIED CLAY PIPE	SANITARY SEWER	Active	1/1/1952	BASIN 2
99	10-57_10-56	10-57	10-56	126	8	VITRIFIED CLAY PIPE	SANITARY SEWER	Active	1/1/1952	BASIN 2
100	10-58_10-57	10-58	10-57	178	8	VITRIFIED CLAY PIPE	SANITARY SEWER	Active	1/1/1952	BASIN 2
101	10-59_10-58	10-59	10-58	170	8	VITRIFIED CLAY PIPE	SANITARY SEWER	Active	1/1/1952	BASIN 2
102	10-6_10-4	10-6	10-4	101	8	VITRIFIED CLAY PIPE	SANITARY SEWER	Active	1/1/1952	BASIN 2
103	10-60_10-59	10-60	10-59	104	8	VITRIFIED CLAY PIPE	SANITARY SEWER	Active	1/1/1952	BASIN 2
104	10-61_10-60	10-61	10-60	86	8	VITRIFIED CLAY PIPE	SANITARY SEWER	Active	1/1/1952	BASIN 2
105	10-62_10-61	10-62	10-61	114	8	VITRIFIED CLAY PIPE	SANITARY SEWER	Active	1/1/1952	BASIN 2
106	10-63R_10-62	10-63R	10-62	177	8	VITRIFIED CLAY PIPE	SANITARY SEWER	Active	1/1/1952	BASIN 2
107	10-64_10-47	10-64	10-47	292	10	VITRIFIED CLAY PIPE	SANITARY SEWER	Active	1/1/1954	BASIN 2
108	10-65_10-101	10-65	10-101	31	8	VITRIFIED CLAY PIPE	SANITARY SEWER	Active	1/1/1954	BASIN 2
109	10-66_10-134	10-66	10-134	35	8	VITRIFIED CLAY PIPE	SANITARY SEWER	Active	9/1/2009	BASIN 2
110	10-67_10-66	10-67	10-66	323	8	VITRIFIED CLAY PIPE	SANITARY SEWER	Active	1/1/1952	BASIN 2
111	10-68R_10-67	10-68R	10-67	406	8	VITRIFIED CLAY PIPE	SANITARY SEWER	Active	1/1/1952	BASIN 2
112	10-69_10-67	10-69	10-67	63	8	VITRIFIED CLAY PIPE	SANITARY SEWER	Active	1/1/1952	BASIN 2
113	10-7_10-6	10-7	10-6	112	8	VITRIFIED CLAY PIPE	SANITARY SEWER	Active	1/1/1952	BASIN 2
114	10-70_10-69	10-70	10-69	80	8	VITRIFIED CLAY PIPE	SANITARY SEWER	Active	1/1/1952	BASIN 2
115	10-71_10-70	10-71	10-70	339	8	VITRIFIED CLAY PIPE	SANITARY SEWER	Active	1/1/1952	BASIN 2
116	10-72_10-70	10-72	10-70	146	8	VITRIFIED CLAY PIPE	SANITARY SEWER	Active	1/1/1952	BASIN 2
117	10-73R_10-72	10-73R	10-72	231	8	VITRIFIED CLAY PIPE	SANITARY SEWER	Active	1/1/1952	BASIN 2
118	10-74_10-64	10-74	10-64	220	10	VITRIFIED CLAY PIPE	SANITARY SEWER	Active	1/1/1964	BASIN 2
119	10-75_10-135	10-75	10-135	334	8	VITRIFIED CLAY PIPE	SANITARY SEWER	Active	1/1/1950	BASIN 2
120	10-76_10-75	10-76	10-75	254	6	VITRIFIED CLAY PIPE	SANITARY SEWER	Active	1/1/1950	BASIN 2
121	10-77R_10-76	10-77R	10-76	254	8	VITRIFIED CLAY PIPE	SANITARY SEWER	Active	1/1/1977	BASIN 2
122	10-78_10-137	10-78	10-137	275	10	VITRIFIED CLAY PIPE	SANITARY SEWER	Active	1/1/1964	BASIN 2
123	10-79_10-78	10-79	10-78	100	8	VITRIFIED CLAY PIPE	SANITARY SEWER	Active	1/1/1955	BASIN 2
124	10-80_10-79	10-80	10-79	267	8	VITRIFIED CLAY PIPE	SANITARY SEWER	Active	1/1/1955	BASIN 2
125	10-81R_10-80	10-81R	10-80	276	8	VITRIFIED CLAY PIPE	SANITARY SEWER	Active	1/1/1953	BASIN 2
126	10-82_10-78	10-82	10-78	279	10	VITRIFIED CLAY PIPE	SANITARY SEWER	Active	1/1/1964	BASIN 2
127	10-83_10-82	10-83	10-82	149	8	VITRIFIED CLAY PIPE	SANITARY SEWER	Active	1/1/1954	BASIN 2
128	10-84R_10-83	10-84R	10-83	55	8	VITRIFIED CLAY PIPE	SANITARY SEWER	Active	1/1/1954	BASIN 2
129	10-85_10-83	10-85	10-83	121	8	VITRIFIED CLAY PIPE	SANITARY SEWER	Active	1/1/1954	BASIN 2
130	10-86R_10-115	10-86R	10-115	70	8	VITRIFIED CLAY PIPE	SANITARY SEWER	Active	1/1/1954	BASIN 2
131	10-87R_10-104	10-87R	10-104	55	8	VITRIFIED CLAY PIPE	SANITARY SEWER	Active	1/1/1954	BASIN 2
132	10-88_10-104	10-88	10-104	130	8	VITRIFIED CLAY PIPE	SANITARY SEWER	Active	1/1/1951	BASIN 2
133	10-89_10-85	10-89	10-85	75	8	VITRIFIED CLAY PIPE	SANITARY SEWER	Active	1/1/1954	BASIN 2
134	10-9_10-10	10-9	10-10	393	8	VITRIFIED CLAY PIPE	SANITARY SEWER	Active	1/1/1955	BASIN 2
135	10-90_10-105	10-90	10-105	50	8	VITRIFIED CLAY PIPE	SANITARY SEWER	Active	1/1/1954	BASIN 2
136	10-91R_10-90	10-91R	10-90	163	8	VITRIFIED CLAY PIPE	SANITARY SEWER	Active	1/1/1954	BASIN 2
137	10-92_10-90	10-92	10-90	137	8	VITRIFIED CLAY PIPE	SANITARY SEWER	Active	1/1/1954	BASIN 2
138	10-93R_10-92	10-93R	10-92	176	8	VITRIFIED CLAY PIPE	SANITARY SEWER	Active	1/1/1955	BASIN 2
139	10-94_10-92	10-94	10-92	48	8	VITRIFIED CLAY PIPE	SANITARY SEWER	Active	1/1/1956	BASIN 2
140	10-95_10-94	10-95	10-94	110	8	VITRIFIED CLAY PIPE	SANITARY SEWER	Active	1/1/1955	BASIN 2
141	10-96_10-95	10-96	10-95	55	8	VITRIFIED CLAY PIPE	SANITARY SEWER	Active	1/1/1955	BASIN 2
142	10-97_10-96	10-97	10-96	165	8	VITRIFIED CLAY PIPE	SANITARY SEWER	Active	1/1/1955	BASIN 2
143	10-98_10-97	10-98	10-97	117	8	VITRIFIED CLAY PIPE	SANITARY SEWER	Active	1/1/1955	BASIN 2
144	10-99_10-98	10-99	10-98	122	8	VITRIFIED CLAY PIPE	SANITARY SEWER	Active	1/1/1955	BASIN 2
145	1-10R_1-8	1-10R	1-8	17	6	VITRIFIED CLAY PIPE	SANITARY SEWER	Active	1/1/1949	BASIN 1
146	11-1_11-6	11-1	11-6	139	8	VITRIFIED CLAY PIPE	SANITARY SEWER	Active	1/1/1956	BASIN 2
148	1-11_1-7	1-11	1-7	124	6	VITRIFIED CLAY PIPE	SANITARY SEWER	Active	1/1/1953	BASIN 1
150	11-10_11-12	11-10	11-12	477	12	VITRIFIED CLAY PIPE	SANITARY SEWER	Active	1/1/1959	BASIN 2
151	11-100_11-119	11-100	11-119	118	8	VITRIFIED CLAY PIPE	SANITARY SEWER	Active	1/1/2008	BASIN 4
152	11-101_11-102	11-101	11-102	198	8	VITRIFIED CLAY PIPE	SANITARY SEWER	Active	1/1/1984	BASIN 4
153	11-102_11-104	11-102	11-104	260	8	VITRIFIED CLAY PIPE	SANITARY SEWER	Active	1/1/1984	BASIN 4
154	11-103_11-102	11-103	11-102	279	8	VITRIFIED CLAY PIPE	SANITARY SEWER	Active	1/1/1984	BASIN 4
155	11-104_11-105	11-104	11-105	260	8	VITRIFIED CLAY PIPE	SANITARY SEWER	Active	1/1/1984	BASIN 4
156	11-105_11-106	11-105	11-106	287	10	VITRIFIED CLAY PIPE	SANITARY SEWER	Active	1/1/1984	BASIN 4
157	11-106_19-92	11-106	19-92	237	10	VITRIFIED CLAY PIPE	SANITARY SEWER	Active	1/1/1984	BASIN 4

158	11-107_11-10	11-107	11-10	223	12	VITRIFIED CLAY PIPE	SANITARY SEWER	Active	9/1/2009	BASIN 2
159	11-108_11-107	11-108	11-107	324	8	VITRIFIED CLAY PIPE	SANITARY SEWER	Active	1/1/1988	BASIN 2
160	11-109_11-10	11-109	11-10	187	8	VITRIFIED CLAY PIPE	SANITARY SEWER	Active	1/1/1988	BASIN 2
161	11-110_19-91	11-110	19-91	321	8	VITRIFIED CLAY PIPE	SANITARY SEWER	Active	1/1/1984	BASIN 4
162	11-111_11-30	11-111	11-30	95	6	VITRIFIED CLAY PIPE	SANITARY SEWER	Active	1/1/1995	BASIN 2
163	11-112_11-111	11-112	11-111	253	8	VITRIFIED CLAY PIPE	SANITARY SEWER	Active	1/1/1995	BASIN 2
164	11-113_12-34	11-113	12-34	125	8	VITRIFIED CLAY PIPE	SANITARY SEWER	Active	1/1/1954	BASIN 1
165	11-114_12-37	11-114	12-37	132	8	VITRIFIED CLAY PIPE	SANITARY SEWER	Active	1/1/1954	BASIN 1
166	11-115_10-113	11-115	10-113	293	8	VITRIFIED CLAY PIPE	SANITARY SEWER	Active	1/1/1956	BASIN 2
167	11-115R_11-85	11-115R	11-85	222	8	VITRIFIED CLAY PIPE	SANITARY SEWER	Active	1/1/1954	BASIN 3
168	11-116_11-44	11-116	11-44	272	8	VITRIFIED CLAY PIPE	SANITARY SEWER	Active	8/6/1963	BASIN 2
169	11-116R_4-33	11-116R	4-33	381	8	VITRIFIED CLAY PIPE	SANITARY SEWER	Active	1/1/1965	BASIN 1
170	11-117_11-116	11-117	11-116	140	8	VITRIFIED CLAY PIPE	SANITARY SEWER	Active	7/2/1963	BASIN 2
171	11-117R_11-115	11-117R	11-115	49	8	VITRIFIED CLAY PIPE	SANITARY SEWER	Active	1/1/1956	BASIN 2
172	11-118_11-3	11-118	11-3	222	6	VITRIFIED CLAY PIPE	SANITARY SEWER	Active	1/1/1956	BASIN 2
173	11-119_11-101	11-119	11-101	149	8	VITRIFIED CLAY PIPE	SANITARY SEWER	Active	1/1/2008	BASIN 4
174	11-12_11-14	11-12	11-14	36	12	VITRIFIED CLAY PIPE	SANITARY SEWER	Active	1/1/1952	BASIN 2
175	11-120_11-57	11-120	11-57	297	12	VITRIFIED CLAY PIPE	SANITARY SEWER	Active	9/1/2009	BASIN 2
176	11-121_11-120	11-121	11-120	297	12	VITRIFIED CLAY PIPE	SANITARY SEWER	Active	9/1/2009	BASIN 2
177	11-122_11-9	11-122	11-9	395	10	VITRIFIED CLAY PIPE	SANITARY SEWER	Active	1/1/1954	BASIN 2
178	11-123_11-122	11-123	11-122	52	12	VITRIFIED CLAY PIPE	SANITARY SEWER	Active	9/1/2009	BASIN 2
179	11-13_11-15	11-13	11-15	200	8	VITRIFIED CLAY PIPE	SANITARY SEWER	Active		BASIN 2
180	11-14_11-16	11-14	11-16	55	12	VITRIFIED CLAY PIPE	SANITARY SEWER	Active	1/1/1952	BASIN 2
181	11-15_11-16	11-15	11-16	185	6		TRUNK LINE	Active		BASIN 2
182	11-16_11-17	11-16	11-17	429	12	VITRIFIED CLAY PIPE	SANITARY SEWER	Active		BASIN 2
183	11-17_11-18	11-17	11-18	55	12	VITRIFIED CLAY PIPE	SANITARY SEWER	Active	1/1/1952	BASIN 2
184	11-18_11-19	11-18	11-19	30	12	VITRIFIED CLAY PIPE	SANITARY SEWER	Active	1/1/1954	BASIN 2
186	11-19_12-31	11-19	12-31	263	12	VITRIFIED CLAY PIPE	SANITARY SEWER	Active	1/1/1954	BASIN 3
187	1-12_1-11	1-12	1-11	174	8	VITRIFIED CLAY PIPE	SANITARY SEWER	Active	1/1/1953	BASIN 1
188	11-2_11-3	11-2	11-3	231	8	VITRIFIED CLAY PIPE	SANITARY SEWER	Active	1/1/1956	BASIN 2
189	11-21_11-97	11-21	11-97	269	8	VITRIFIED CLAY PIPE	SANITARY SEWER	Active	1/1/1959	BASIN 2
190	11-22_11-21	11-22	11-21	260	8	VITRIFIED CLAY PIPE	SANITARY SEWER	Active	1/1/1959	BASIN 2
191	11-24_11-111	11-24	11-111	106	6	VITRIFIED CLAY PIPE	SANITARY SEWER	Active	1/1/1944	BASIN 2
192	11-3_11-50	11-3	11-50	151	8	VITRIFIED CLAY PIPE	SANITARY SEWER	Active	1/1/1956	BASIN 2
193	1-13_1-25R	1-13	1-25R	49	8	VITRIFIED CLAY PIPE	SANITARY SEWER	Active	1/1/1958	BASIN 1
194	11-30_11-31	11-30	11-31	200	6	VITRIFIED CLAY PIPE	SANITARY SEWER	Active	1/1/1944	BASIN 2
195	11-31_11-33	11-31	11-33	159	6	VITRIFIED CLAY PIPE	SANITARY SEWER	Active	1/1/1944	BASIN 2
196	11-33_11-36	11-33	11-36	172	6	VITRIFIED CLAY PIPE	SANITARY SEWER	Active	1/1/1965	BASIN 2
197	11-34R_11-33	11-34R	11-33	141	6	VITRIFIED CLAY PIPE	SANITARY SEWER	Active	1/1/1965	BASIN 2
198	11-35R_11-34R	11-35R	11-34R	119	6	VITRIFIED CLAY PIPE	SANITARY SEWER	Active	1/1/1965	BASIN 2
199	11-36_11-37	11-36	11-37	130	8	VITRIFIED CLAY PIPE	SANITARY SEWER	Active	1/1/1959	BASIN 2
200	11-37_11-22	11-37	11-22	125	8	VITRIFIED CLAY PIPE	SANITARY SEWER	Active	1/1/1959	BASIN 2
201	11-38_11-37	11-38	11-37	319	8	VITRIFIED CLAY PIPE	SANITARY SEWER	Active	1/1/1959	BASIN 2
202	11-39_11-38	11-39	11-38	150	8	VITRIFIED CLAY PIPE	SANITARY SEWER	Active	1/1/1975	BASIN 2
203	1-14_1-13	1-14	1-13	66	8	VITRIFIED CLAY PIPE	SANITARY SEWER	Active	1/1/1958	BASIN 1
204	11-4_11-5	11-4	11-5	207	8	VITRIFIED CLAY PIPE	SANITARY SEWER	Active	1/1/1965	BASIN 2
205	11-40R_11-39	11-40R	11-39	147	8	VITRIFIED CLAY PIPE	SANITARY SEWER	Active	1/1/1975	BASIN 2
206	11-41R_11-39	11-41R	11-39	290	8	VITRIFIED CLAY PIPE	SANITARY SEWER	Active	1/1/1975	BASIN 2
207	11-42R_11-39	11-42R	11-39	162	8	VITRIFIED CLAY PIPE	SANITARY SEWER	Active	1/1/1975	BASIN 2
208	11-43_11-30	11-43	11-30	179	6	VITRIFIED CLAY PIPE	SANITARY SEWER	Active	1/1/1944	BASIN 2
209	11-44_11-43	11-44	11-43	219	6	VITRIFIED CLAY PIPE	SANITARY SEWER	Active	2/17/1947	BASIN 2
210	11-45_11-44	11-45	11-44	97	6	VITRIFIED CLAY PIPE	SANITARY SEWER	Active	1/1/1944	BASIN 2
211	11-47R_11-118	11-47R	11-118	322	6	VITRIFIED CLAY PIPE	SANITARY SEWER	Active	1/1/1944	BASIN 2
212	11-48R_11-45	11-48R	11-45	142	6	VITRIFIED CLAY PIPE	SANITARY SEWER	Active	1/1/1944	BASIN 2
213	11-49_11-50	11-49	11-50	185	6	VITRIFIED CLAY PIPE	SANITARY SEWER	Active	1/1/1944	BASIN 2
214	1-15_1-11	1-15	1-11	309	6	VITRIFIED CLAY PIPE	SANITARY SEWER	Active	1/1/1948	BASIN 1
215	11-5_11-55	11-5	11-55	252	8	VITRIFIED CLAY PIPE	SANITARY SEWER	Active	1/1/1965	BASIN 2
216	11-50_11-55	11-50	11-55	241	8	VITRIFIED CLAY PIPE	SANITARY SEWER	Active	1/1/1965	BASIN 2
217	11-51_11-49	11-51	11-49	307	6	VITRIFIED CLAY PIPE	SANITARY SEWER	Active	1/1/1944	BASIN 2
218	11-52_12-109	11-52	12-109	279	6	VITRIFIED CLAY PIPE	SANITARY SEWER	Active	1/1/1945	BASIN 4
219	11-53_11-51	11-53	11-51	177	6	VITRIFIED CLAY PIPE	SANITARY SEWER	Active	1/1/1944	BASIN 2
220	11-54_11-51	11-54	11-51	269	6	VITRIFIED CLAY PIPE	SANITARY SEWER	Active	1/1/1944	BASIN 2
221	11-55_11-56	11-55	11-56	207	6	VITRIFIED CLAY PIPE	SANITARY SEWER	Active	1/1/1955	BASIN 2
222	11-56_11-8	11-56	11-8	184	6	VITRIFIED CLAY PIPE	SANITARY SEWER	Active	1/1/1944	BASIN 2
223	11-57_11-58	11-57	11-58	440	12	VITRIFIED CLAY PIPE	SANITARY SEWER	Active	1/1/1965	BASIN 1
224	11-58_11-62	11-58	11-62	595	12	VITRIFIED CLAY PIPE	SANITARY SEWER	Active	1/1/1965	BASIN 1
225	11-59_11-58	11-59	11-58	357	8	VITRIFIED CLAY PIPE	SANITARY SEWER	Active	1/1/1959	BASIN 1
226	11-6_11-2	11-6	11-2	150	8	VITRIFIED CLAY PIPE	SANITARY SEWER	Active		BASIN 2
227	1-16_1-15	1-16	1-15	25	6	VITRIFIED CLAY PIPE	SANITARY SEWER	Active	1/1/1948	BASIN 1
228	11-60_11-59	11-60	11-59	85	8	VITRIFIED CLAY PIPE	SANITARY SEWER	Active	1/1/1959	BASIN 1
229	11-61_11-59	11-61	11-59	253	8	VITRIFIED CLAY PIPE	SANITARY SEWER	Active	1/1/1959	BASIN 1
230	11-62_12-32	11-62	12-32	272	12	VITRIFIED CLAY PIPE	SANITARY SEWER	Active	1/1/1965	BASIN 1
232	11-63_11-62	11-63	11-62	150	8	VITRIFIED CLAY PIPE	SANITARY SEWER	Active	1/1/1950	BASIN 1

233	11-64_11-63	11-64	11-63	411	8	VITRIFIED CLAY PIPE	SANITARY SEWER	Active	1/1/1950	BASIN 1
234	11-65_11-64	11-65	11-64	232	6	VITRIFIED CLAY PIPE	SANITARY SEWER	Active	1/1/1950	BASIN 1
235	11-66_11-65	11-66	11-65	165	6	VITRIFIED CLAY PIPE	SANITARY SEWER	Active	1/1/1950	BASIN 1
236	11-67_11-66	11-67	11-66	181	6	VITRIFIED CLAY PIPE	SANITARY SEWER	Active	1/1/1950	BASIN 1
237	11-68_11-64	11-68	11-64	132	6	VITRIFIED CLAY PIPE	SANITARY SEWER	Active	1/1/1950	BASIN 1
238	11-69_11-68	11-69	11-68	185	6	VITRIFIED CLAY PIPE	SANITARY SEWER	Active	1/1/1950	BASIN 1
239	11-6R_11-7	11-6R	11-7	380	8	VITRIFIED CLAY PIPE	SANITARY SEWER	Active	1/1/1965	BASIN 2
240	1-17_1-15	1-17	1-15	318	8	VITRIFIED CLAY PIPE	SANITARY SEWER	Active	1/1/1948	BASIN 1
241	11-7_11-8	11-7	11-8	300	6	VITRIFIED CLAY PIPE	SANITARY SEWER	Active	1/1/1965	BASIN 2
242	11-71R_11-52	11-71R	11-52	151	6	VITRIFIED CLAY PIPE	SANITARY SEWER	Active	1/1/1945	BASIN 4
243	11-72_11-57	11-72	11-57	252	10	VITRIFIED CLAY PIPE	SANITARY SEWER	Active	1/1/1965	BASIN 3
244	11-73_11-72	11-73	11-72	294	10	VITRIFIED CLAY PIPE	SANITARY SEWER	Active	1/1/1952	BASIN 3
245	11-74_11-73	11-74	11-73	400	10	VITRIFIED CLAY PIPE	SANITARY SEWER	Active	1/1/1952	BASIN 3
246	11-75_11-74	11-75	11-74	90	10	VITRIFIED CLAY PIPE	SANITARY SEWER	Active	1/1/1954	BASIN 3
247	11-76_11-75	11-76	11-75	131	10	VITRIFIED CLAY PIPE	SANITARY SEWER	Active	1/1/1952	BASIN 3
248	11-77_11-75	11-77	11-75	126	8	VITRIFIED CLAY PIPE	SANITARY SEWER	Active	1/1/1954	BASIN 3
249	11-78R_11-77	11-78R	11-77	232	8	VITRIFIED CLAY PIPE	SANITARY SEWER	Active	1/1/1954	BASIN 3
250	11-79_11-80	11-79	11-80	324	8	VITRIFIED CLAY PIPE	SANITARY SEWER	Active	1/1/1958	BASIN 3
251	11-8_11-9	11-8	11-9	267	8	VITRIFIED CLAY PIPE	SANITARY SEWER	Active	1/1/1944	BASIN 2
252	1-18_1-19	1-18	1-19	90	8	VITRIFIED CLAY PIPE	SANITARY SEWER	Active		BASIN 1
253	11-80_11-73	11-80	11-73	106	8	VITRIFIED CLAY PIPE	SANITARY SEWER	Active	1/1/2008	BASIN 3
254	11-81_11-100	11-81	11-100	36	8	VITRIFIED CLAY PIPE	SANITARY SEWER	Active	1/1/2008	BASIN 3
255	11-81_11-96	11-81	11-96	60	6	VITRIFIED CLAY PIPE	SANITARY SEWER	Active	1/1/1954	BASIN 3
256	11-82_11-81	11-82	11-81	185	8	VITRIFIED CLAY PIPE	SANITARY SEWER	Active	1/1/1954	BASIN 3
257	11-83_11-82	11-83	11-82	127	8	VITRIFIED CLAY PIPE	SANITARY SEWER	Active	1/1/1954	BASIN 3
258	11-84R_11-83	11-84R	11-83	120	8	VITRIFIED CLAY PIPE	SANITARY SEWER	Active	1/1/1954	BASIN 3
259	11-85_11-98	11-85	11-98	191	8	VITRIFIED CLAY PIPE	SANITARY SEWER	Active	1/1/1954	BASIN 3
260	11-86_11-100	11-86	11-100	275	8	VITRIFIED CLAY PIPE	SANITARY SEWER	Active	10/10/2008	BASIN 3
262	11-87_11-86	11-87	11-86	244	6	VITRIFIED CLAY PIPE	SANITARY SEWER	Active	1/1/1948	BASIN 3
263	11-88_11-87	11-88	11-87	254	6	VITRIFIED CLAY PIPE	SANITARY SEWER	Active	1/1/1948	BASIN 3
264	11-89_11-88	11-89	11-88	130	6	VITRIFIED CLAY PIPE	SANITARY SEWER	Active	1/1/1948	BASIN 3
265	11-9_11-107	11-9	11-107	277	12	VITRIFIED CLAY PIPE	SANITARY SEWER	Active	9/1/2009	BASIN 2
266	1-19_1-20	1-19	1-20	63	8	VITRIFIED CLAY PIPE	SANITARY SEWER	Active	9/16/1999	BASIN 1
267	11-91_11-86	11-91	11-86	301	8	VITRIFIED CLAY PIPE	TRUNK LINE	Active	11/10/2008	BASIN 3
268	11-92_11-91	11-92	11-91	372	6	VITRIFIED CLAY PIPE	SANITARY SEWER	Active	1/1/1948	BASIN 3
269	11-93R_11-92	11-93R	11-92	153	6	VITRIFIED CLAY PIPE	SANITARY SEWER	Active	1/1/1948	BASIN 3
270	11-94R_11-95	11-94R	11-95	81	6	VITRIFIED CLAY PIPE	SANITARY SEWER	Active	1/1/1949	BASIN 4
271	11-95_19-1	11-95	19-1	248	6	VITRIFIED CLAY PIPE	SANITARY SEWER	Active	1/1/1949	BASIN 4
272	11-96_11-80	11-96	11-80	230	8	VITRIFIED CLAY PIPE	SANITARY SEWER	Active	1/1/2008	BASIN 3
273	11-97_11-18	11-97	11-18	30	8	VITRIFIED CLAY PIPE	SANITARY SEWER	Active	1/1/1959	BASIN 2
274	11-98_11-83	11-98	11-83	35	8	VITRIFIED CLAY PIPE	SANITARY SEWER	Active	1/1/1954	BASIN 3
275	11-99_11-54	11-99	11-54	148	8	VITRIFIED CLAY PIPE	SANITARY SEWER	Active	1/1/1980	BASIN 2
276	1-1R_1-2	1-1R	1-2	230	6	VITRIFIED CLAY PIPE	SANITARY SEWER	Active	1/1/1949	BASIN 1
277	1-2_1-3	1-2	1-3	124	6	VITRIFIED CLAY PIPE	SANITARY SEWER	Active	1/1/1949	BASIN 1
278	1-20_1-21	1-20	1-21	105	8	VITRIFIED CLAY PIPE	SANITARY SEWER	Active		BASIN 1
279	1-21_3-95	1-21	3-95	149	8	VITRIFIED CLAY PIPE	SANITARY SEWER	Active	8/10/1999	BASIN 1
280	12-10_12-7	12-10	12-7	206	8	VITRIFIED CLAY PIPE	SANITARY SEWER	Active	1/1/1964	BASIN 1
281	12-100_12-8	12-100	12-8	294	8	VITRIFIED CLAY PIPE	SANITARY SEWER	Active	1/1/1964	BASIN 1
282	12-101R_12-100	12-101R	12-100	266	8	VITRIFIED CLAY PIPE	SANITARY SEWER	Active	1/1/1964	BASIN 1
283	12-102_12-93	12-102	12-93	130	8	VITRIFIED CLAY PIPE	SANITARY SEWER	Active	1/1/1975	BASIN 1
284	12-103R_12-37	12-103R	12-37	146	8	VITRIFIED CLAY PIPE	SANITARY SEWER	Active	1/1/1954	BASIN 1
285	12-104_12-13	12-104	12-13	136	12	VITRIFIED CLAY PIPE	SANITARY SEWER	Active	1/1/1977	BASIN 1
286	12-105_12-51	12-105	12-51	497	8	VITRIFIED CLAY PIPE	SANITARY SEWER	Active	1/1/1979	BASIN 1
287	12-106_12-105	12-106	12-105	274	8	VITRIFIED CLAY PIPE	SANITARY SEWER	Active	1/1/1979	BASIN 1
288	12-107_12-108	12-107	12-108	210	8	VITRIFIED CLAY PIPE	SANITARY SEWER	Active	1/1/1979	BASIN 1
289	12-108_12-97	12-108	12-97	176	12	VITRIFIED CLAY PIPE	SANITARY SEWER	Active	1/1/1979	BASIN 1
290	12-109_12-41	12-109	12-41	145	6		SANITARY SEWER	Active	1/1/1956	BASIN 4
291	12-11_12-12	12-11	12-12	127	8	VITRIFIED CLAY PIPE	SANITARY SEWER	Active	1/1/1964	BASIN 1
292	12-110_12-49	12-110	12-49	300	8	VITRIFIED CLAY PIPE	SANITARY SEWER	Active	1/1/1996	BASIN 1
293	12-111_11-24	12-111	11-24	123	6	VITRIFIED CLAY PIPE	SANITARY SEWER	Active	1/1/1966	BASIN 2
294	12-112_11-22	12-112	11-22	273	8	VITRIFIED CLAY PIPE	SANITARY SEWER	Active	1/1/1959	BASIN 2
295	12-113_12-76	12-113	12-76	183	10		SANITARY SEWER	Active		BASIN 1
296	12-114_11-21	12-114	11-21	185	8	VITRIFIED CLAY PIPE	SANITARY SEWER	Active	1/1/1959	BASIN 2
297	12-115R_12-111	12-115R	12-111	172	6	VITRIFIED CLAY PIPE	SANITARY SEWER	Active	1/1/1966	BASIN 2
298	12-116R_12-111	12-116R	12-111	146	6	VITRIFIED CLAY PIPE	SANITARY SEWER	Active	1/1/1944	BASIN 2
299	12-117R_12-112	12-117R	12-112	145	8	VITRIFIED CLAY PIPE	SANITARY SEWER	Active	1/1/1959	BASIN 2
300	12-118R_5-25	12-118R	5-25	376	8	VITRIFIED CLAY PIPE	SANITARY SEWER	Active	1/1/1960	BASIN 1
301	12-119R_11-22	12-119R	11-22	194	8	VITRIFIED CLAY PIPE	SANITARY SEWER	Active	1/1/1959	BASIN 2
302	12-12_12-10	12-12	12-10	37	8	VITRIFIED CLAY PIPE	SANITARY SEWER	Active	1/1/1964	BASIN 1
303	12-120_12-42	12-120	12-42	161	6	VITRIFIED CLAY PIPE	SANITARY SEWER	Active	1/1/1944	BASIN 4
304	12-121_13-5	12-121	13-5	398	12	VITRIFIED CLAY PIPE	SANITARY SEWER	Active	1/1/1950	BASIN 1
305	12-13_12-14	12-13	12-14	136	12	VITRIFIED CLAY PIPE	SANITARY SEWER	Active	1/1/1977	BASIN 1
306	12-14_12-18	12-14	12-18	177	12	VITRIFIED CLAY PIPE	SANITARY SEWER	Active	1/1/1977	BASIN 1

307	12-15_12-14	12-15	12-14	200	8	VITRIFIED CLAY PIPE	SANITARY SEWER	Active	1/1/1954	BASIN 1
308	12-16_12-15	12-16	12-15	300	8	VITRIFIED CLAY PIPE	SANITARY SEWER	Active	1/1/1954	BASIN 1
310	12-17R_12-16	12-17R	12-16	130	8	VITRIFIED CLAY PIPE	SANITARY SEWER	Active	1/1/1954	BASIN 1
311	12-18_12-23	12-18	12-23	319	12	VITRIFIED CLAY PIPE	SANITARY SEWER	Active	1/1/1977	BASIN 1
312	12-19_12-18	12-19	12-18	400	8	VITRIFIED CLAY PIPE	SANITARY SEWER	Active	1/1/1962	BASIN 1
313	12-20R_12-19	12-20R	12-19	336	8	VITRIFIED CLAY PIPE	SANITARY SEWER	Active	1/1/1962	BASIN 1
314	12-21_12-22	12-21	12-22	215	8	VITRIFIED CLAY PIPE	SANITARY SEWER	Active	1/1/1962	BASIN 1
315	12-22_12-19	12-22	12-19	120	8	VITRIFIED CLAY PIPE	SANITARY SEWER	Active	1/1/1962	BASIN 1
316	12-23_12-26	12-23	12-26	102	6	VITRIFIED CLAY PIPE	SANITARY SEWER	Active	1/1/1977	BASIN 1
317	12-23_12-57	12-23	12-57	470	12	VITRIFIED CLAY PIPE	SANITARY SEWER	Active	1/1/1977	BASIN 1
319	12-24_12-26	12-24	12-26	496	8	VITRIFIED CLAY PIPE	SANITARY SEWER	Active	1/1/1953	BASIN 1
321	12-26_12-27	12-26	12-27	278	6	VITRIFIED CLAY PIPE	SANITARY SEWER	Active	1/1/1944	BASIN 1
322	12-27_12-108	12-27	12-108	285	12	VITRIFIED CLAY PIPE	SANITARY SEWER	Active	1/1/1952	BASIN 1
323	12-28_12-27	12-28	12-27	260	12	VITRIFIED CLAY PIPE	SANITARY SEWER	Active	1/1/1952	BASIN 1
324	12-29_12-58	12-29	12-58	414	18	VITRIFIED CLAY PIPE	SANITARY SEWER	Active	1/1/1965	BASIN 1
325	12-3_12-4	12-3	12-4	54	6	VITRIFIED CLAY PIPE	SANITARY SEWER	Active	1/1/1955	BASIN 1
326	12-30_12-28	12-30	12-28	320	12	VITRIFIED CLAY PIPE	SANITARY SEWER	Active	1/1/1952	BASIN 1
327	12-30_12-29	12-30	12-29	93	15	VITRIFIED CLAY PIPE	SANITARY SEWER	Active	1/1/1965	BASIN 1
328	12-31_12-30	12-31	12-30	122	12	VITRIFIED CLAY PIPE	SANITARY SEWER	Active	1/1/1954	BASIN 1
329	12-32_12-29	12-32	12-29	198	12	VITRIFIED CLAY PIPE	SANITARY SEWER	Active	1/1/1965	BASIN 1
330	12-33_12-32	12-33	12-32	216	8	VITRIFIED CLAY PIPE	SANITARY SEWER	Active	1/1/1954	BASIN 1
331	12-34_12-33	12-34	12-33	186	8	VITRIFIED CLAY PIPE	SANITARY SEWER	Active	1/1/1954	BASIN 1
332	12-37_12-34	12-37	12-34	290	8	VITRIFIED CLAY PIPE	SANITARY SEWER	Active	1/1/1954	BASIN 1
333	12-38_12-109	12-38	12-109	351	8	VITRIFIED CLAY PIPE	SANITARY SEWER	Active	1/1/2066	BASIN 4
335	12-39R_12-38	12-39R	12-38	179	8	VITRIFIED CLAY PIPE	SANITARY SEWER	Active	1/1/1969	BASIN 4
336	12-4_12-5	12-4	12-5	383	8	VITRIFIED CLAY PIPE	SANITARY SEWER	Active	1/1/1962	BASIN 1
337	12-41_12-42	12-41	12-42	397	8	VITRIFIED CLAY PIPE	SANITARY SEWER	Active	1/1/1956	BASIN 4
338	12-42_20-58	12-42	20-58	221	6	VITRIFIED CLAY PIPE	SANITARY SEWER	Active	1/1/1956	BASIN 4
339	12-43R_12-42	12-43R	12-42	270	6	CAST IRON PIPE	SANITARY SEWER	Active	4/18/1966	BASIN 4
340	12-44R_20-59	12-44R	20-59	360	8	VITRIFIED CLAY PIPE	SANITARY SEWER	Active	1/1/1951	BASIN 4
341	12-45_20-64	12-45	20-64	331	8	VITRIFIED CLAY PIPE	SANITARY SEWER	Active	1/1/1956	BASIN 4
342	12-47_12-96	12-47	12-96	60	12	VITRIFIED CLAY PIPE	SANITARY SEWER	Active	1/1/1952	BASIN 1
343	12-48_13-10	12-48	13-10	400	21	VITRIFIED CLAY PIPE	SANITARY SEWER	Active	1/1/1965	BASIN 1
344	12-49_13-8	12-49	13-8	200	8	VITRIFIED CLAY PIPE	SANITARY SEWER	Active	1/1/1944	BASIN 1
345	12-5_12-104	12-5	12-104	181	12	VITRIFIED CLAY PIPE	SANITARY SEWER	Active	1/1/1977	BASIN 1
346	12-50_12-48	12-50	12-48	400	21	VITRIFIED CLAY PIPE	SANITARY SEWER	Active	1/1/1965	BASIN 1
347	12-51_12-110	12-51	12-110	313	8	VITRIFIED CLAY PIPE	SANITARY SEWER	Active	1/1/1944	BASIN 1
348	12-52_12-50	12-52	12-50	313	21	VITRIFIED CLAY PIPE	SANITARY SEWER	Active	1/1/1965	BASIN 1
349	12-53R_12-120	12-53R	12-120	161	6	VITRIFIED CLAY PIPE	SANITARY SEWER	Active	1/1/1944	BASIN 4
350	12-54R_12-55	12-54R	12-55	367	6	VITRIFIED CLAY PIPE	SANITARY SEWER	Active	1/1/1944	BASIN 1
351	12-55_12-105	12-55	12-105	115	8	VITRIFIED CLAY PIPE	SANITARY SEWER	Active	1/1/1944	BASIN 1
352	12-56_12-52	12-56	12-52	447	21	VITRIFIED CLAY PIPE	SANITARY SEWER	Active	1/1/1965	BASIN 1
353	12-57_12-56	12-57	12-56	294	21	VITRIFIED CLAY PIPE	SANITARY SEWER	Active	1/1/1965	BASIN 1
354	12-58_12-57	12-58	12-57	105	18	VITRIFIED CLAY PIPE	SANITARY SEWER	Active	1/1/1965	BASIN 1
355	12-59R_12-60	12-59R	12-60	479	6	VITRIFIED CLAY PIPE	SANITARY SEWER	Active	1/1/1952	BASIN 1
356	1-25R_1-12	1-25R	1-12	104	8	VITRIFIED CLAY PIPE	SANITARY SEWER	Active	1/1/1953	BASIN 1
357	12-6_12-113	12-6	12-113	434	10	VITRIFIED CLAY PIPE	SANITARY SEWER	Active	1/1/1944	BASIN 1
358	12-60_13-7	12-60	13-7	614	6	VITRIFIED CLAY PIPE	SANITARY SEWER	Active	1/1/1956	BASIN 1
359	12-62_12-63	12-62	12-63	26	12	VITRIFIED CLAY PIPE	SANITARY SEWER	Active	1/1/1952	BASIN 1
360	12-63_12-121	12-63	12-121	278	12	HIGH DENSITY POLYETHYLENE	SANITARY SEWER	Active	1/1/1950	BASIN 1
361	12-65_12-96	12-65	12-96	280	12	VITRIFIED CLAY PIPE	SANITARY SEWER	Active	1/1/1980	BASIN 1
362	12-66_12-98	12-66	12-98	74	8	VITRIFIED CLAY PIPE	SANITARY SEWER	Active	1/1/1980	BASIN 1
363	12-67_12-65	12-67	12-65	149	10	VITRIFIED CLAY PIPE	SANITARY SEWER	Active	1/1/1954	BASIN 1
364	12-68_12-66	12-68	12-66	117	6	VITRIFIED CLAY PIPE	SANITARY SEWER	Active	1/1/1947	BASIN 1
365	12-69R_12-68	12-69R	12-68	271	6	VITRIFIED CLAY PIPE	SANITARY SEWER	Active	1/1/1947	BASIN 1
366	12-7_12-4	12-7	12-4	135	8	VITRIFIED CLAY PIPE	SANITARY SEWER	Active	1/1/1962	BASIN 1
367	12-71_12-67	12-71	12-67	279	10	VITRIFIED CLAY PIPE	SANITARY SEWER	Active	1/1/1954	BASIN 1
368	12-72_12-71	12-72	12-71	87	10	VITRIFIED CLAY PIPE	SANITARY SEWER	Active	1/1/1954	BASIN 1
369	12-73_12-75	12-73	12-75	187	6	VITRIFIED CLAY PIPE	SANITARY SEWER	Active	1/1/1954	BASIN 1
370	12-74R_12-73	12-74R	12-73	169	6	VITRIFIED CLAY PIPE	SANITARY SEWER	Active	1/1/1946	BASIN 1
371	12-75_12-76	12-75	12-76	83	8	VITRIFIED CLAY PIPE	SANITARY SEWER	Active	1/1/1954	BASIN 1
372	12-76_12-72	12-76	12-72	184	10	VITRIFIED CLAY PIPE	SANITARY SEWER	Active	1/1/1954	BASIN 1
373	12-77_12-79	12-77	12-79	411	8		TRUNK LINE	Active		BASIN 1
374	12-79_13-4	12-79	13-4	380	8	VITRIFIED CLAY PIPE	SANITARY SEWER	Active	1/1/1948	BASIN 1
375	12-8_12-7	12-8	12-7	141	8	VITRIFIED CLAY PIPE	SANITARY SEWER	Active	1/1/1962	BASIN 1
376	12-80_12-79	12-80	12-79	345	8	VITRIFIED CLAY PIPE	SANITARY SEWER	Active	1/1/1953	BASIN 1
377	12-81_12-80	12-81	12-80	239	8	VITRIFIED CLAY PIPE	SANITARY SEWER	Active	1/1/1953	BASIN 1
378	12-82_12-89	12-82	12-89	58	8	VITRIFIED CLAY PIPE	SANITARY SEWER	Active	1/1/1963	BASIN 1
379	12-83_12-81	12-83	12-81	162	8	VITRIFIED CLAY PIPE	SANITARY SEWER	Active	1/1/1953	BASIN 1
380	12-84R_12-83	12-84R	12-83	334	8	VITRIFIED CLAY PIPE	SANITARY SEWER	Active	1/1/1963	BASIN 1
381	12-85_12-86	12-85	12-86	83	6	VITRIFIED CLAY PIPE	SANITARY SEWER	Active	1/1/1944	BASIN 1
382	12-86_12-93	12-86	12-93	367	6	VITRIFIED CLAY PIPE	SANITARY SEWER	Active	1/1/1944	BASIN 1
383	12-87_12-86	12-87	12-86	272	8	VITRIFIED CLAY PIPE	SANITARY SEWER	Active	1/1/1963	BASIN 1

385	12-88_12-87	12-88	12-87	83	8	VITRIFIED CLAY PIPE	SANITARY SEWER	Active	1/1/1963	BASIN 1
386	12-89_12-87	12-89	12-87	270	8	VITRIFIED CLAY PIPE	SANITARY SEWER	Active	1/1/1963	BASIN 1
387	12-90_12-91	12-90	12-91	127	8	VITRIFIED CLAY PIPE	SANITARY SEWER	Active	1/1/1975	BASIN 1
388	12-91_12-92	12-91	12-92	162	8	VITRIFIED CLAY PIPE	SANITARY SEWER	Active	1/1/1975	BASIN 1
389	12-92_12-102	12-92	12-102	210	8	VITRIFIED CLAY PIPE	SANITARY SEWER	Active	1/1/1975	BASIN 1
390	12-93_12-94	12-93	12-94	50	6	VITRIFIED CLAY PIPE	SANITARY SEWER	Active	1/1/1944	BASIN 1
391	12-94_12-6	12-94	12-6	251	6	VITRIFIED CLAY PIPE	SANITARY SEWER	Active	1/1/1944	BASIN 1
392	12-95_12-45	12-95	12-45	376	8	VITRIFIED CLAY PIPE	SANITARY SEWER	Active	1/1/1956	BASIN 4
393	12-96_12-62	12-96	12-62	260	12	VITRIFIED CLAY PIPE	SANITARY SEWER	Active	1/1/1952	BASIN 1
394	12-97_12-47	12-97	12-47	62	12	VITRIFIED CLAY PIPE	SANITARY SEWER	Active	1/1/1952	BASIN 1
395	12-98_12-65	12-98	12-65	60	8	VITRIFIED CLAY PIPE	SANITARY SEWER	Active	1/1/1980	BASIN 1
396	12-99_12-90	12-99	12-90	64	8	VITRIFIED CLAY PIPE	SANITARY SEWER	Active	1/1/1975	BASIN 1
397	12-9R_12-8	12-9R	12-8	270	8	VITRIFIED CLAY PIPE	SANITARY SEWER	Active	1/1/1962	BASIN 1
398	1-3_1-4	1-3	1-4	257	6	VITRIFIED CLAY PIPE	SANITARY SEWER	Active	1/1/1949	BASIN 1
399	13-10_13-16	13-10	13-16	400	21	VITRIFIED CLAY PIPE	SANITARY SEWER	Active	1/1/1965	BASIN 1
400	13-100_13-101	13-100	13-101	135	8	VITRIFIED CLAY PIPE	SANITARY SEWER	Active		BASIN 1
401	13-101_13-102	13-101	13-102	64	8	VITRIFIED CLAY PIPE	SANITARY SEWER	Active		BASIN 1
402	13-102_13-96	13-102	13-96	110	8	VITRIFIED CLAY PIPE	SANITARY SEWER	Active		BASIN 1
403	13-103_13-23	13-103	13-23	28	0	VITRIFIED CLAY PIPE	SANITARY SEWER	Active		BASIN 1
404	13-104_13-76	13-104	13-76	306	8	VITRIFIED CLAY PIPE	TRUNK LINE	Active		BASIN 1
405	13-105R_12-83	13-105R	12-83	91	8	VITRIFIED CLAY PIPE	SANITARY SEWER	Active	1/1/1953	BASIN 1
408	13-106R_12-45	13-106R	12-45	430	8	VITRIFIED CLAY PIPE	SANITARY SEWER	Active	1/1/1955	BASIN 4
409	13-107_21-123	13-107	21-123	283	8	HIGH DENSITY POLYETHYLENE	SANITARY SEWER	Active	5/20/2020	BASIN 1
410	13-11_13-43	13-11	13-43	617	8	VITRIFIED CLAY PIPE	SANITARY SEWER	Active	1/1/1940	BASIN 1
411	13-12_13-11	13-12	13-11	90	8	VITRIFIED CLAY PIPE	SANITARY SEWER	Active	1/1/1975	BASIN 1
412	13-13_13-12	13-13	13-12	141	8	VITRIFIED CLAY PIPE	SANITARY SEWER	Active	1/1/1975	BASIN 1
413	13-14_13-13	13-14	13-13	76	8	VITRIFIED CLAY PIPE	SANITARY SEWER	Active	1/1/1975	BASIN 1
414	13-15_13-12	13-15	13-12	107	8	VITRIFIED CLAY PIPE	SANITARY SEWER	Active	1/1/1975	BASIN 1
415	13-16_13-42	13-16	13-42	404	21	VITRIFIED CLAY PIPE	SANITARY SEWER	Active	1/1/1965	BASIN 1
416	13-17_13-18	13-17	13-18	54	6	VITRIFIED CLAY PIPE	SANITARY SEWER	Active	1/1/1947	BASIN 1
417	13-18_13-38	13-18	13-38	345	12	VITRIFIED CLAY PIPE	SANITARY SEWER	Active	1/1/1950	BASIN 1
418	13-19_13-32	13-19	13-32	280	8	VITRIFIED CLAY PIPE	SANITARY SEWER	Active	1/1/1959	BASIN 1
419	13-2_13-3	13-2	13-3	420	6	VITRIFIED CLAY PIPE	SANITARY SEWER	Active	1/1/1947	BASIN 1
420	13-20_13-19	13-20	13-19	290	8	VITRIFIED CLAY PIPE	SANITARY SEWER	Active	1/1/1959	BASIN 1
421	13-21_13-20	13-21	13-20	257	6	VITRIFIED CLAY PIPE	SANITARY SEWER	Active	1/1/1950	BASIN 1
423	13-22R_13-21	13-22R	13-21	408	6	VITRIFIED CLAY PIPE	SANITARY SEWER	Active	1/1/1953	BASIN 1
424	13-23_13-24	13-23	13-24	72	8	VITRIFIED CLAY PIPE	SANITARY SEWER	Active	1/1/1957	BASIN 1
425	13-24_13-83	13-24	13-83	228	8	VITRIFIED CLAY PIPE	SANITARY SEWER	Active	1/1/1957	BASIN 1
426	13-25_13-26	13-25	13-26	77	8	VITRIFIED CLAY PIPE	SANITARY SEWER	Active	1/1/1957	BASIN 1
427	13-26_13-28	13-26	13-28	184	8	VITRIFIED CLAY PIPE	SANITARY SEWER	Active	1/1/1957	BASIN 1
428	13-28_13-98R	13-28	13-98R	169	8	VITRIFIED CLAY PIPE	SANITARY SEWER	Active	1/1/1957	BASIN 1
429	13-29_13-28	13-29	13-28	102	8	VITRIFIED CLAY PIPE	SANITARY SEWER	Active	1/1/1957	BASIN 1
430	13-3_13-4	13-3	13-4	440	6	VITRIFIED CLAY PIPE	SANITARY SEWER	Active	1/1/1947	BASIN 1
431	13-30_13-29	13-30	13-29	321	8	VITRIFIED CLAY PIPE	SANITARY SEWER	Active	1/1/1957	BASIN 1
432	13-31R_13-32	13-31R	13-32	97	8	VITRIFIED CLAY PIPE	SANITARY SEWER	Active	1/1/1958	BASIN 1
433	13-32_13-33	13-32	13-33	45	8	VITRIFIED CLAY PIPE	SANITARY SEWER	Active	1/1/1959	BASIN 1
434	13-33_13-34	13-33	13-34	382	8	VITRIFIED CLAY PIPE	SANITARY SEWER	Active	1/1/1953	BASIN 1
435	13-34_13-35	13-34	13-35	155	8	VITRIFIED CLAY PIPE	SANITARY SEWER	Active	1/1/1953	BASIN 1
436	13-35_13-62	13-35	13-62	256	8	VITRIFIED CLAY PIPE	SANITARY SEWER	Active	1/1/1950	BASIN 1
437	13-36R_13-35	13-36R	13-35	240	8	VITRIFIED CLAY PIPE	SANITARY SEWER	Active	1/1/1944	BASIN 1
438	13-38_13-58	13-38	13-58	366	12	VITRIFIED CLAY PIPE	SANITARY SEWER	Active	1/1/1950	BASIN 1
439	13-39_13-40	13-39	13-40	217	6	VITRIFIED CLAY PIPE	SANITARY SEWER	Active	1/1/1947	BASIN 1
440	13-4_13-21	13-4	13-21	204	8	VITRIFIED CLAY PIPE	SANITARY SEWER	Active	1/1/1950	BASIN 1
441	13-40_13-41	13-40	13-41	187	6	VITRIFIED CLAY PIPE	SANITARY SEWER	Active	1/1/1947	BASIN 1
442	13-41_13-53	13-41	13-53	49	24	VITRIFIED CLAY PIPE	SANITARY SEWER	Active	1/1/1965	BASIN 1
443	13-42_13-41	13-42	13-41	111	21	VITRIFIED CLAY PIPE	SANITARY SEWER	Active	1/1/1965	BASIN 1
444	13-43_13-42	13-43	13-42	223	10	VITRIFIED CLAY PIPE	SANITARY SEWER	Active	1/1/1965	BASIN 1
445	13-43_13-44	13-43	13-44	223	8	VITRIFIED CLAY PIPE	SANITARY SEWER	Active	1/1/1940	BASIN 1
446	13-44_13-46	13-44	13-46	40	8	VITRIFIED CLAY PIPE	SANITARY SEWER	Active	1/1/1940	BASIN 1
447	13-45_21-90	13-45	21-90	70	18	VITRIFIED CLAY PIPE	SANITARY SEWER	Active	1/1/1953	BASIN 1
448	13-46_13-48	13-46	13-48	15	15	VITRIFIED CLAY PIPE	SANITARY SEWER	Active	1/1/1955	BASIN 1
449	13-48_21-123	13-48	21-123	303	12	VITRIFIED CLAY PIPE	SANITARY SEWER	Active	1/1/1947	BASIN 1
450	13-49_21-67	13-49	21-67	345	27	VITRIFIED CLAY PIPE	SANITARY SEWER	Active	1/1/1965	BASIN 11
451	13-5_13-97	13-5	13-97	30	12	VITRIFIED CLAY PIPE	SANITARY SEWER	Active	1/1/1965	BASIN 1
452	13-50_13-49	13-50	13-49	390	27	VITRIFIED CLAY PIPE	SANITARY SEWER	Active	1/1/1965	BASIN 11
453	13-51_13-99	13-51	13-99	313	6	VITRIFIED CLAY PIPE	SANITARY SEWER	Active		BASIN 11
454	13-52_13-48	13-52	13-48	341	15	VITRIFIED CLAY PIPE	SANITARY SEWER	Active	1/1/1955	BASIN 1
455	13-52_13-50	13-52	13-50	372	27	VITRIFIED CLAY PIPE	SANITARY SEWER	Active	1/1/1965	BASIN 1
456	13-53_13-46	13-53	13-46	344	15	VITRIFIED CLAY PIPE	SANITARY SEWER	Active	1/1/1955	BASIN 1
457	13-53_13-52	13-53	13-52	49	24	VITRIFIED CLAY PIPE	TRUNK LINE	Active	1/1/1965	BASIN 1
458	13-54_13-53	13-54	13-53	107	15	VITRIFIED CLAY PIPE	SANITARY SEWER	Active	1/1/1955	BASIN 1
459	13-55_13-52	13-55	13-52	110	10	VITRIFIED CLAY PIPE	SANITARY SEWER	Active	1/1/1940	BASIN 1
460	13-57_13-55	13-57	13-55	253	10	VITRIFIED CLAY PIPE	SANITARY SEWER	Active	1/1/1940	BASIN 1

461	13-58_13-54	13-58	13-54	286	15	VITRIFIED CLAY PIPE	SANITARY SEWER	Active	1/1/1955	BASIN 1
462	13-59_13-57	13-59	13-57	82	10	VITRIFIED CLAY PIPE	SANITARY SEWER	Active	1/1/1940	BASIN 1
463	13-6_13-17	13-6	13-17	382	6	VITRIFIED CLAY PIPE	OVERFLOW	Active	1/1/1947	BASIN 1
465	13-6_13-5	13-6	13-5	26	12		SANITARY SEWER	Active		BASIN 1
466	13-60_13-59	13-60	13-59	203	10	VITRIFIED CLAY PIPE	SANITARY SEWER	Active	1/1/1940	BASIN 1
468	13-61_13-60	13-61	13-60	91	10	VITRIFIED CLAY PIPE	SANITARY SEWER	Active	1/1/1940	BASIN 1
470	13-62_13-61	13-62	13-61	171	8	VITRIFIED CLAY PIPE	SANITARY SEWER	Active	1/1/1950	BASIN 1
471	13-63_13-62	13-63	13-62	500	8	VITRIFIED CLAY PIPE	SANITARY SEWER	Active	1/1/1950	BASIN 1
472	13-64_13-63	13-64	13-63	290	6	VITRIFIED CLAY PIPE	SANITARY SEWER	Active	1/1/1950	BASIN 1
473	13-65_13-64	13-65	13-64	290	6	VITRIFIED CLAY PIPE	SANITARY SEWER	Active	1/1/1950	BASIN 1
474	13-66_13-67	13-66	13-67	460	6	VITRIFIED CLAY PIPE	SANITARY SEWER	Active	1/1/1940	BASIN 1
475	13-67_13-61	13-67	13-61	400	6	VITRIFIED CLAY PIPE	SANITARY SEWER	Active	1/1/1940	BASIN 1
476	13-68_13-90	13-68	13-90	507	6	VITRIFIED CLAY PIPE	SANITARY SEWER	Active	1/1/1940	BASIN 1
477	13-69_13-68	13-69	13-68	497	6	VITRIFIED CLAY PIPE	SANITARY SEWER	Active	1/1/1940	BASIN 1
478	13-7_13-6	13-7	13-6	48	6	VITRIFIED CLAY PIPE	SANITARY SEWER	Active	1/1/1965	BASIN 1
479	13-70_14-47	13-70	14-47	327	6	VITRIFIED CLAY PIPE	SANITARY SEWER	Active	1/1/1940	BASIN 11
480	13-72_13-66	13-72	13-66	240	6	VITRIFIED CLAY PIPE	SANITARY SEWER	Active	1/1/1940	BASIN 1
481	13-73_13-72	13-73	13-72	146	8	VITRIFIED CLAY PIPE	SANITARY SEWER	Active	1/1/1953	BASIN 1
482	13-76_13-64	13-76	13-64	72	6	VITRIFIED CLAY PIPE	SANITARY SEWER	Active	1/1/1950	BASIN 1
483	13-77_13-76	13-77	13-76	266	8	VITRIFIED CLAY PIPE	SANITARY SEWER	Active	1/1/1950	BASIN 1
484	13-78_13-77	13-78	13-77	299	8	VITRIFIED CLAY PIPE	SANITARY SEWER	Active	1/1/1950	BASIN 1
485	13-79_13-78	13-79	13-78	69	8	VITRIFIED CLAY PIPE	SANITARY SEWER	Active	1/1/1950	BASIN 1
486	13-8_13-11	13-8	13-11	412	8	VITRIFIED CLAY PIPE	SANITARY SEWER	Active	1/1/1940	BASIN 1
487	13-80R_13-79	13-80R	13-79	110	8	VITRIFIED CLAY PIPE	SANITARY SEWER	Active	1/1/1950	BASIN 1
488	13-81R_13-34	13-81R	13-34	147	8		SANITARY SEWER	Active	1/1/1953	BASIN 1
489	13-82R_13-104	13-82R	13-104	115	8	VITRIFIED CLAY PIPE	SANITARY SEWER	Active	1/1/1950	BASIN 1
490	13-83_13-25	13-83	13-25	118	8	VITRIFIED CLAY PIPE	SANITARY SEWER	Active	1/1/1957	BASIN 1
491	13-85_13-2	13-85	13-2	115	6	VITRIFIED CLAY PIPE	SANITARY SEWER	Active	1/1/1947	BASIN 1
492	13-86_13-85	13-86	13-85	210	8	VITRIFIED CLAY PIPE	SANITARY SEWER	Active	1/1/1976	BASIN 1
493	13-87_13-86	13-87	13-86	150	8	VITRIFIED CLAY PIPE	SANITARY SEWER	Active	1/1/1976	BASIN 1
494	13-89_13-73	13-89	13-73	260	8	VITRIFIED CLAY PIPE	SANITARY SEWER	Active	1/1/1984	BASIN 1
495	13-90_13-60	13-90	13-60	26	6	VITRIFIED CLAY PIPE	SANITARY SEWER	Active	1/1/1940	BASIN 1
496	13-91_13-90	13-91	13-90	26	8	VITRIFIED CLAY PIPE	SANITARY SEWER	Active	1/1/1989	BASIN 1
497	13-92_13-91	13-92	13-91	169	8	VITRIFIED CLAY PIPE	SANITARY SEWER	Active	1/1/1989	BASIN 1
498	13-93_13-92	13-93	13-92	195	8	DUCTILE IRON PIPE	SANITARY SEWER	Active	1/1/1989	BASIN 1
499	13-94_13-93	13-94	13-93	250	8	DUCTILE IRON PIPE	SANITARY SEWER	Active	1/1/1989	BASIN 1
500	13-95_13-94	13-95	13-94	88	8	DUCTILE IRON PIPE	SANITARY SEWER	Active	1/1/1989	BASIN 1
501	13-96_13-86	13-96	13-86	190	8	VITRIFIED CLAY PIPE	SANITARY SEWER	Active	1/1/1978	BASIN 1
502	13-97_13-18	13-97	13-18	399	12	VITRIFIED CLAY PIPE	SANITARY SEWER	Active	1/1/1950	BASIN 1
503	13-98R_13-77	13-98R	13-77	260	8	VITRIFIED CLAY PIPE	SANITARY SEWER	Active	1/1/1950	BASIN 1
504	13-99_13-49	13-99	13-49	290	6	VITRIFIED CLAY PIPE	SANITARY SEWER	Active		BASIN 11
505	13-9R_13-8	13-9R	13-8	185	8	VITRIFIED CLAY PIPE	SANITARY SEWER	Active	1/1/1961	BASIN 1
506	1-4_1-5	1-4	1-5	185	8	VITRIFIED CLAY PIPE	SANITARY SEWER	Active	1/1/1949	BASIN 1
507	14-10R_14-11	14-10R	14-11	227	8		SANITARY SEWER	Active	1/1/1954	BASIN 11
508	14-11_22-130	14-11	22-130	62	8	VITRIFIED CLAY PIPE	SANITARY SEWER	Active	1/1/1953	BASIN 11
509	14-16_14-54	14-16	14-54	140	8	VITRIFIED CLAY PIPE	SANITARY SEWER	Active	6/13/2013	BASIN 11
510	14-17_14-54	14-17	14-54	236	8	VITRIFIED CLAY PIPE	SANITARY SEWER	Active	1/1/1975	BASIN 11
511	14-18_14-17	14-18	14-17	97	8	VITRIFIED CLAY PIPE	SANITARY SEWER	Active	1/1/1977	BASIN 11
512	14-2_14-3	14-2	14-3	240	8	VITRIFIED CLAY PIPE	SANITARY SEWER	Active	1/1/1953	BASIN 11
513	14-20_14-52	14-20	14-52	275	6	VITRIFIED CLAY PIPE	SANITARY SEWER	Active	1/1/1950	BASIN 11
514	14-21R_14-22	14-21R	14-22	285	8	VITRIFIED CLAY PIPE	SANITARY SEWER	Active	1/1/1957	BASIN 11
515	14-22_14-25	14-22	14-25	138	8	VITRIFIED CLAY PIPE	SANITARY SEWER	Active	1/1/1985	BASIN 11
516	14-25_14-27	14-25	14-27	200	8	VITRIFIED CLAY PIPE	SANITARY SEWER	Active	1/1/1985	BASIN 11
517	14-26R_14-25	14-26R	14-25	215	6	VITRIFIED CLAY PIPE	SANITARY SEWER	Active	1/1/1971	BASIN 11
518	14-27_14-37	14-27	14-37	288	8	VITRIFIED CLAY PIPE	SANITARY SEWER	Active		BASIN 11
519	14-28_14-27	14-28	14-27	80	6	VITRIFIED CLAY PIPE	SANITARY SEWER	Active	1/1/1946	BASIN 11
520	14-29_14-28	14-29	14-28	254	6	VITRIFIED CLAY PIPE	SANITARY SEWER	Active	1/1/1946	BASIN 11
521	14-3_14-4	14-3	14-4	100	8	VITRIFIED CLAY PIPE	SANITARY SEWER	Active	1/1/1953	BASIN 11
522	14-30_14-29	14-30	14-29	358	6	VITRIFIED CLAY PIPE	SANITARY SEWER	Active	1/1/1946	BASIN 11
523	14-31_14-30	14-31	14-30	284	6	VITRIFIED CLAY PIPE	SANITARY SEWER	Active	1/1/1946	BASIN 11
524	14-32R_14-31	14-32R	14-31	116	6	VITRIFIED CLAY PIPE	SANITARY SEWER	Active	1/1/1946	BASIN 11
525	14-33R_14-34	14-33R	14-34	189	6	VITRIFIED CLAY PIPE	SANITARY SEWER	Active	1/1/1946	BASIN 11
526	14-34_14-35	14-34	14-35	433	6	VITRIFIED CLAY PIPE	SANITARY SEWER	Active	1/1/1946	BASIN 11
527	14-35_14-36	14-35	14-36	282	6	VITRIFIED CLAY PIPE	SANITARY SEWER	Active	1/1/1946	BASIN 11
528	14-36_14-37	14-36	14-37	175	6	VITRIFIED CLAY PIPE	SANITARY SEWER	Active	1/1/1946	BASIN 11
529	14-37_14-38	14-37	14-38	240	8	VITRIFIED CLAY PIPE	SANITARY SEWER	Active	1/1/1985	BASIN 11
530	14-38_22-24	14-38	22-24	224	8	VITRIFIED CLAY PIPE	SANITARY SEWER	Active	1/1/1984	BASIN 11
531	14-39_14-38	14-39	14-38	365	8	HIGH DENSITY POLYETHYLENE	SANITARY SEWER	Active	8/29/2017	BASIN 11
532	14-4_14-51	14-4	14-51	251	8	VITRIFIED CLAY PIPE	SANITARY SEWER	Active	1/1/1953	BASIN 11
533	14-40_14-39	14-40	14-39	70	8	VITRIFIED CLAY PIPE	SANITARY SEWER	Active	1/1/1956	BASIN 11
534	14-41_14-40	14-41	14-40	170	8	VITRIFIED CLAY PIPE	SANITARY SEWER	Active	1/1/1956	BASIN 11
535	14-42_14-41	14-42	14-41	110	8	VITRIFIED CLAY PIPE	SANITARY SEWER	Active	1/1/1956	BASIN 11
536	14-43R_14-42	14-43R	14-42	230	8	VITRIFIED CLAY PIPE	SANITARY SEWER	Active	1/1/1963	BASIN 11

537	14-44_14-18	14-44	14-18	295	8	VITRIFIED CLAY PIPE	SANITARY SEWER	Active	1/1/1977	BASIN 11
538	14-44R_14-34	14-44R	14-34	151	6	VITRIFIED CLAY PIPE	SANITARY SEWER	Active	1/1/1963	BASIN 11
539	14-45_14-44	14-45	14-44	195	8	VITRIFIED CLAY PIPE	SANITARY SEWER	Active	1/1/1977	BASIN 11
540	14-46_14-16	14-46	14-16	246	8	VITRIFIED CLAY PIPE	SANITARY SEWER	Active	1/1/1984	BASIN 11
541	14-47_14-46	14-47	14-46	248	8	VITRIFIED CLAY PIPE	SANITARY SEWER	Active	1/1/1984	BASIN 11
542	14-5_14-11	14-5	14-11	309	8	VITRIFIED CLAY PIPE	SANITARY SEWER	Active	1/1/1953	BASIN 11
543	14-50R_13-70	14-50R	13-70	358	6	VITRIFIED CLAY PIPE	SANITARY SEWER	Active	1/1/1940	BASIN 11
544	14-51_14-5	14-51	14-5	252	8	VITRIFIED CLAY PIPE	SANITARY SEWER	Active	1/1/1953	BASIN 11
545	14-52_14-22	14-52	14-22	211	8	VITRIFIED CLAY PIPE	SANITARY SEWER	Active		BASIN 11
546	14-53_14-52	14-53	14-52	99	8	VITRIFIED CLAY PIPE	SANITARY SEWER	Active	6/13/2013	BASIN 11
547	14-54_14-53	14-54	14-53	221	8	VITRIFIED CLAY PIPE	SANITARY SEWER	Active	6/13/2013	BASIN 11
548	14-55_14-56	14-55	14-56	63	8	DUCTILE IRON PIPE	SANITARY SEWER	Active	8/31/2021	BASIN 11
549	14-56_14-9	14-56	14-9	50	8	CAST IRON PIPE	SANITARY SEWER	Active	8/31/2021	BASIN 11
550	14-6_14-5	14-6	14-5	31	6	VITRIFIED CLAY PIPE	SANITARY SEWER	Active	1/1/1946	BASIN 11
551	14-7_14-6	14-7	14-6	232	6	VITRIFIED CLAY PIPE	SANITARY SEWER	Active	1/1/1946	BASIN 11
552	14-8R_14-7	14-8R	14-7	163	6	VITRIFIED CLAY PIPE	SANITARY SEWER	Active	1/1/1946	BASIN 11
553	14-9_14-6	14-9	14-6	213	6	VITRIFIED CLAY PIPE	SANITARY SEWER	Active	1/1/1946	BASIN 11
554	1-5_3-7	1-5	3-7	577	6	VITRIFIED CLAY PIPE	SANITARY SEWER	Active	1/1/1953	BASIN 1
555	15-1_15-2	15-1	15-2	530	6	VITRIFIED CLAY PIPE	SANITARY SEWER	Active	1/1/1947	BASIN 11
556	15-10_23-73	15-10	23-73	255	8	VITRIFIED CLAY PIPE	SANITARY SEWER	Active	1/1/1962	BASIN 11
557	15-11_15-9	15-11	15-9	150	8	VITRIFIED CLAY PIPE	SANITARY SEWER	Active	1/1/1962	BASIN 11
558	15-12R_15-11	15-12R	15-11	170	8	VITRIFIED CLAY PIPE	SANITARY SEWER	Active	1/1/1962	BASIN 11
559	15-2_23-123	15-2	23-123	229	6	VCP + CIP + VCP	SANITARY SEWER	Active	1/1/1947	BASIN 11
560	15-4_15-2	15-4	15-2	93	8	VITRIFIED CLAY PIPE	SANITARY SEWER	Active	1/1/1947	BASIN 11
561	15-5_15-4	15-5	15-4	107	8	VITRIFIED CLAY PIPE	SANITARY SEWER	Active	1/1/1962	BASIN 11
562	15-6_15-5	15-6	15-5	182	8	VITRIFIED CLAY PIPE	SANITARY SEWER	Active	1/1/1962	BASIN 11
563	15-7R_23-40	15-7R	23-40	160	8	VITRIFIED CLAY PIPE	SANITARY SEWER	Active	1/1/1962	BASIN 11
564	15-8R_15-9	15-8R	15-9	105	8	VITRIFIED CLAY PIPE	SANITARY SEWER	Active	1/1/1962	BASIN 11
565	15-9_15-10	15-9	15-10	253	8	VITRIFIED CLAY PIPE	SANITARY SEWER	Active	1/1/1962	BASIN 11
566	1-6_1-4	1-6	1-4	167	6	VITRIFIED CLAY PIPE	SANITARY SEWER	Active	1/1/1949	BASIN 1
567	16-10_8-49	16-10	8-49	241	4	ASBESTOS CEMENT PIPE	FORCE MAIN	Active		BASIN 3
568	16-11_17-61	16-11	17-61	399	8	VITRIFIED CLAY PIPE	SANITARY SEWER	Active	1/1/1952	BASIN 3
569	16-13_PS11	16-13	PS11	242	8	VITRIFIED CLAY PIPE	SANITARY SEWER	Active	5/21/2004	BASIN 3
570	16-2_16-3	16-2	16-3	222	8	VITRIFIED CLAY PIPE	SANITARY SEWER	Active	1/1/1966	BASIN 3
571	16-3_16-4	16-3	16-4	82	8	VITRIFIED CLAY PIPE	SANITARY SEWER	Active	1/1/1966	BASIN 3
572	16-4_16-8	16-4	16-8	87	8	VITRIFIED CLAY PIPE	SANITARY SEWER	Active	1/1/1966	BASIN 3
573	16-5R_16-4	16-5R	16-4	149	8	VITRIFIED CLAY PIPE	SANITARY SEWER	Active	1/1/1966	BASIN 3
574	16-6_16-10	16-6	16-10	293	8		FORCE MAIN	Active		BASIN 3
575	16-7_16-6	16-7	16-6	40	4	ASBESTOS CEMENT PIPE	SANITARY SEWER	Active	1/1/1966	BASIN 3
576	16-8_16-7	16-8	16-7	40	8	VITRIFIED CLAY PIPE	SANITARY SEWER	Active	1/1/1966	BASIN 3
577	16-9R_16-8	16-9R	16-8	346	8	VITRIFIED CLAY PIPE	SANITARY SEWER	Active	1/1/1966	BASIN 3
578	1-7_1-6	1-7	1-6	18	6	VITRIFIED CLAY PIPE	SANITARY SEWER	Active	1/1/1944	BASIN 1
581	17-1_17-61	17-1	17-61	387	8	VITRIFIED CLAY PIPE	SANITARY SEWER	Active	1/1/1952	BASIN 3
582	17-10_17-13	17-10	17-13	115	8	VITRIFIED CLAY PIPE	SANITARY SEWER	Active		BASIN 5
583	17-11_17-10	17-11	17-10	59	6	VITRIFIED CLAY PIPE	SANITARY SEWER	Active	1/1/1955	BASIN 5
584	17-12R_17-11	17-12R	17-11	500	6	VITRIFIED CLAY PIPE	SANITARY SEWER	Active	1/1/1950	BASIN 5
586	17-13_17-68	17-13	17-68	101	6	VITRIFIED CLAY PIPE	SANITARY SEWER	Active		BASIN 5
587	17-14_17-72	17-14	17-72	600	8	HIGH DENSITY POLYETHYLENE	SANITARY SEWER	Active	3/12/2014	BASIN 5
588	17-15_18-22	17-15	18-22	250	8	VITRIFIED CLAY PIPE	SANITARY SEWER	Active	1/1/1959	BASIN 5
589	17-16_17-15	17-16	17-15	40	8	VITRIFIED CLAY PIPE	SANITARY SEWER	Active	1/1/1959	BASIN 5
590	17-17_17-16	17-17	17-16	370	6	VITRIFIED CLAY PIPE	SANITARY SEWER	Active	1/1/1944	BASIN 5
591	17-18_17-17	17-18	17-17	322	8	VITRIFIED CLAY PIPE	SANITARY SEWER	Active	1/1/1968	BASIN 5
592	17-19_17-18	17-19	17-18	167	8	VITRIFIED CLAY PIPE	SANITARY SEWER	Active	1/1/1968	BASIN 5
593	17-2_17-67	17-2	17-67	258	8	VITRIFIED CLAY PIPE	SANITARY SEWER	Active	1/1/1952	BASIN 3
594	17-20R_17-19	17-20R	17-19	165	8	VITRIFIED CLAY PIPE	SANITARY SEWER	Active	1/1/1968	BASIN 5
595	17-21_17-16	17-21	17-16	335	8	VITRIFIED CLAY PIPE	SANITARY SEWER	Active	1/1/1961	BASIN 5
596	17-22_17-21	17-22	17-21	52	8	VITRIFIED CLAY PIPE	SANITARY SEWER	Active	1/1/1961	BASIN 5
597	17-23_17-22	17-23	17-22	116	8	VITRIFIED CLAY PIPE	SANITARY SEWER	Active	1/1/1961	BASIN 5
598	17-24_17-22	17-24	17-22	110	6	VITRIFIED CLAY PIPE	SANITARY SEWER	Active	1/1/1961	BASIN 5
599	17-25_17-24	17-25	17-24	76	8	VITRIFIED CLAY PIPE	SANITARY SEWER	Active	1/1/1961	BASIN 5
600	17-26R_17-25	17-26R	17-25	215	8	VITRIFIED CLAY PIPE	SANITARY SEWER	Active	1/1/1961	BASIN 5
601	17-27_17-25	17-27	17-25	163	8	VITRIFIED CLAY PIPE	SANITARY SEWER	Active	1/1/1961	BASIN 5
602	17-28_17-64	17-28	17-64	361	8	VITRIFIED CLAY PIPE	SANITARY SEWER	Active	1/1/1957	BASIN 5
603	17-29_17-28	17-29	17-28	273	8	VITRIFIED CLAY PIPE	SANITARY SEWER	Active	1/1/1957	BASIN 5
604	17-3_17-2	17-3	17-2	110	8	VITRIFIED CLAY PIPE	SANITARY SEWER	Active	1/1/1952	BASIN 3
605	17-30R_17-29	17-30R	17-29	70	8	VITRIFIED CLAY PIPE	SANITARY SEWER	Active	1/1/1957	BASIN 5
606	17-31_17-64	17-31	17-64	350	8	VITRIFIED CLAY PIPE	SANITARY SEWER	Active	1/1/1957	BASIN 5
607	17-32_17-31	17-32	17-31	124	8	VITRIFIED CLAY PIPE	SANITARY SEWER	Active	1/1/1957	BASIN 5
608	17-33_17-32	17-33	17-32	298	8	VITRIFIED CLAY PIPE	SANITARY SEWER	Active	1/1/1957	BASIN 5
609	17-34R_17-33	17-34R	17-33	147	8	VITRIFIED CLAY PIPE	SANITARY SEWER	Active	1/1/1957	BASIN 5
610	17-35R_17-33	17-35R	17-33	173	8	VITRIFIED CLAY PIPE	SANITARY SEWER	Active	1/1/1957	BASIN 5
611	17-36_17-31	17-36	17-31	139	8	VITRIFIED CLAY PIPE	SANITARY SEWER	Active	1/1/1957	BASIN 5
612	17-37_17-36	17-37	17-36	310	8	VITRIFIED CLAY PIPE	SANITARY SEWER	Active	1/1/1957	BASIN 5

613	17-38_17-31	17-38	17-31	300	8	VITRIFIED CLAY PIPE	SANITARY SEWER	Active	1/1/1957	BASIN 5
614	17-39_17-38	17-39	17-38	217	8	VITRIFIED CLAY PIPE	SANITARY SEWER	Active	1/1/1957	BASIN 5
615	17-40_17-39	17-40	17-39	279	8	VITRIFIED CLAY PIPE	SANITARY SEWER	Active	1/1/1962	BASIN 5
616	17-41_17-39	17-41	17-39	48	8	VITRIFIED CLAY PIPE	SANITARY SEWER	Active	1/1/1966	BASIN 5
617	17-42_17-41	17-42	17-41	48	8	VITRIFIED CLAY PIPE	SANITARY SEWER	Active	1/1/1962	BASIN 5
618	17-43_17-42	17-43	17-42	147	8	VITRIFIED CLAY PIPE	SANITARY SEWER	Active	1/1/1962	BASIN 5
619	17-44_17-43	17-44	17-43	127	8	VITRIFIED CLAY PIPE	SANITARY SEWER	Active	1/1/1962	BASIN 5
620	17-45_17-44	17-45	17-44	254	8	VITRIFIED CLAY PIPE	SANITARY SEWER	Active	1/1/1962	BASIN 5
621	17-46R_17-44	17-46R	17-44	130	8	VITRIFIED CLAY PIPE	SANITARY SEWER	Active	1/1/1962	BASIN 5
622	17-46S_17-47	17-46S	17-47	147	6	VITRIFIED CLAY PIPE	SANITARY SEWER	Active		BASIN 5
623	17-47_17-37	17-47	17-37	342	8	VITRIFIED CLAY PIPE	SANITARY SEWER	Active	1/1/1958	BASIN 5
624	17-48R_17-47	17-48R	17-47	163	8	VITRIFIED CLAY PIPE	SANITARY SEWER	Active	1/1/1958	BASIN 5
625	17-49R_17-48R	17-49R	17-48R	150	6	VITRIFIED CLAY PIPE	SANITARY SEWER	Active	1/1/1972	BASIN 5
626	17-4R_17-3	17-4R	17-3	200	8	VITRIFIED CLAY PIPE	SANITARY SEWER	Active	1/1/1952	BASIN 3
627	17-50_18-113	17-50	18-113	459	8	VITRIFIED CLAY PIPE	SANITARY SEWER	Active	1/1/1952	BASIN 4
628	17-51R_17-52	17-51R	17-52	352	8	VITRIFIED CLAY PIPE	SANITARY SEWER	Active	1/1/1952	BASIN 4
629	17-52_17-50	17-52	17-50	180	8	VITRIFIED CLAY PIPE	SANITARY SEWER	Active	1/1/1952	BASIN 4
630	17-53_17-52	17-53	17-52	277	8	VITRIFIED CLAY PIPE	SANITARY SEWER	Active	1/1/1953	BASIN 4
631	17-55R_17-70	17-55R	17-70	144	8	VITRIFIED CLAY PIPE	SANITARY SEWER	Active	1/1/1953	BASIN 4
632	17-56R_17-52	17-56R	17-52	295	8	VITRIFIED CLAY PIPE	SANITARY SEWER	Active	1/1/1952	BASIN 4
633	17-57R_17-58	17-57R	17-58	357	8	VITRIFIED CLAY PIPE	SANITARY SEWER	Active	1/1/1952	BASIN 3
634	17-58_17-62	17-58	17-62	364	8	VITRIFIED CLAY PIPE	SANITARY SEWER	Active	1/1/1952	BASIN 3
635	17-59_17-1	17-59	17-1	110	8	VITRIFIED CLAY PIPE	SANITARY SEWER	Active	1/1/1990	BASIN 3
636	17-5R_17-6	17-5R	17-6	167	8	VITRIFIED CLAY PIPE	SANITARY SEWER	Active	1/1/1950	BASIN 5
637	17-6_17-8	17-6	17-8	302	8	VITRIFIED CLAY PIPE	SANITARY SEWER	Active	1/1/1950	BASIN 5
638	17-61_9-105	17-61	9-105	228	8	VITRIFIED CLAY PIPE	SANITARY SEWER	Active	1/1/1952	BASIN 3
639	17-62_9-95	17-62	9-95	222	8	VITRIFIED CLAY PIPE	SANITARY SEWER	Active	1/1/1952	BASIN 3
640	17-63R_9-80	17-63R	9-80	198	8	VITRIFIED CLAY PIPE	SANITARY SEWER	Active	1/1/1952	BASIN 3
641	17-64_18-5	17-64	18-5	286	8	VITRIFIED CLAY PIPE	SANITARY SEWER	Active	1/1/1957	BASIN 5
642	17-65_16-13	17-65	16-13	185	8	VITRIFIED CLAY PIPE	SANITARY SEWER	Active	5/21/2004	BASIN 3
645	17-66_17-67	17-66	17-67	101	8	VITRIFIED CLAY PIPE	SANITARY SEWER	Active	5/21/2004	BASIN 3
646	17-67_17-1	17-67	17-1	201	8	VITRIFIED CLAY PIPE	SANITARY SEWER	Active	1/1/1952	BASIN 3
647	17-68_17-14	17-68	17-14	73	6	VITRIFIED CLAY PIPE	SANITARY SEWER	Active		BASIN 5
648	17-69_17-24	17-69	17-24	150	6	HIGH DENSITY POLYETHYLENE	SANITARY SEWER	Active	5/8/2006	BASIN 5
649	17-70_17-53	17-70	17-53	55	8	VITRIFIED CLAY PIPE	SANITARY SEWER	Active	3/13/2012	BASIN 4
650	17-72_26-13	17-72	26-13	600	8	HIGH DENSITY POLYETHYLENE	SANITARY SEWER	Active	3/12/2014	BASIN 5
651	17-73_17-74	17-73	17-74	106	8	VITRIFIED CLAY PIPE	SANITARY SEWER	Active	8/31/2018	BASIN 3
652	17-74_17-75	17-74	17-75	92	8	VITRIFIED CLAY PIPE	SANITARY SEWER	Active	8/30/2018	BASIN 3
653	17-75_17-76	17-75	17-76	74	8	VITRIFIED CLAY PIPE	SANITARY SEWER	Active	8/30/2018	BASIN 3
654	17-76_17-77	17-76	17-77	104	8	VITRIFIED CLAY PIPE	SANITARY SEWER	Active	8/30/2018	BASIN 3
655	17-77_17-78	17-77	17-78	38	8	VITRIFIED CLAY PIPE	SANITARY SEWER	Active	8/30/2018	BASIN 3
656	17-78_17-79	17-78	17-79	48	8	VITRIFIED CLAY PIPE	SANITARY SEWER	Active	8/30/2018	BASIN 3
657	17-79_17-81	17-79	17-81	74	8	VITRIFIED CLAY PIPE	SANITARY SEWER	Active	8/30/2018	BASIN 3
658	17-8_17-9	17-8	17-9	453	8	VITRIFIED CLAY PIPE	SANITARY SEWER	Active	1/1/1950	BASIN 5
659	17-80_17-79	17-80	17-79	59	8	VITRIFIED CLAY PIPE	SANITARY SEWER	Active	8/30/2018	BASIN 3
660	17-81_17-82	17-81	17-82	75	8	VITRIFIED CLAY PIPE	SANITARY SEWER	Active	8/30/2018	BASIN 3
661	17-82_17-40	17-82	17-40	303	8	HIGH DENSITY POLYETHYLENE	SANITARY SEWER	Active	7/11/2019	BASIN 3
662	17-9_17-10	17-9	17-10	332	8	VITRIFIED CLAY PIPE	SANITARY SEWER	Active	1/1/1950	BASIN 5
663	1-8_1-6	1-8	1-6	128	6	VITRIFIED CLAY PIPE	SANITARY SEWER	Active	1/1/1949	BASIN 1
664	18-1_18-2	18-1	18-2	440	8	VITRIFIED CLAY PIPE	SANITARY SEWER	Active	1/1/1957	BASIN 5
665	18-10_18-17	18-10	18-17	325	8	VITRIFIED CLAY PIPE	SANITARY SEWER	Active	1/1/1952	BASIN 5
666	18-100R_18-99	18-100R	18-99	135	8	VITRIFIED CLAY PIPE	SANITARY SEWER	Active	1/1/1956	BASIN 4
667	18-101_18-99	18-101	18-99	116	8	VITRIFIED CLAY PIPE	SANITARY SEWER	Active	1/1/1950	BASIN 4
668	18-102R_18-101	18-102R	18-101	154	8	VITRIFIED CLAY PIPE	SANITARY SEWER	Active	1/1/1955	BASIN 4
669	18-103_18-116	18-103	18-116	479	6	VITRIFIED CLAY PIPE	SANITARY SEWER	Active	1/1/1944	BASIN 4
670	18-104_18-126	18-104	18-126	343	8	VITRIFIED CLAY PIPE	SANITARY SEWER	Active	1/1/1952	BASIN 4
671	18-105_18-104	18-105	18-104	156	8	VITRIFIED CLAY PIPE	SANITARY SEWER	Active	1/1/1952	BASIN 4
672	18-106_18-105	18-106	18-105	96	8	VITRIFIED CLAY PIPE	SANITARY SEWER	Active	1/1/1952	BASIN 4
673	18-107_18-106	18-107	18-106	148	8	VITRIFIED CLAY PIPE	SANITARY SEWER	Active	1/1/1952	BASIN 4
675	18-108_18-107	18-108	18-107	100	8	VITRIFIED CLAY PIPE	SANITARY SEWER	Active	1/1/1952	BASIN 4
676	18-109_18-108	18-109	18-108	293	8	VITRIFIED CLAY PIPE	SANITARY SEWER	Active	1/1/1961	BASIN 4
677	18-11_18-10	18-11	18-10	127	8	VITRIFIED CLAY PIPE	SANITARY SEWER	Active	1/1/1952	BASIN 5
678	18-110_18-109	18-110	18-109	183	8	VITRIFIED CLAY PIPE	SANITARY SEWER	Active	1/1/1961	BASIN 4
679	18-111_18-110	18-111	18-110	275	8	VITRIFIED CLAY PIPE	SANITARY SEWER	Active	1/1/1961	BASIN 4
680	18-112_18-108	18-112	18-108	195	8	VITRIFIED CLAY PIPE	SANITARY SEWER	Active	1/1/1952	BASIN 4
681	18-113_18-112	18-113	18-112	163	8	VITRIFIED CLAY PIPE	SANITARY SEWER	Active	1/1/1952	BASIN 4
682	18-114_18-40	18-114	18-40	300	8	VITRIFIED CLAY PIPE	SANITARY SEWER	Active	1/1/1950	BASIN 4
683	18-115_19-8	18-115	19-8	414	8	VITRIFIED CLAY PIPE	SANITARY SEWER	Active	1/1/1955	BASIN 4
684	18-116_18-125	18-116	18-125	255	8	VITRIFIED CLAY PIPE	SANITARY SEWER	Active	1/1/1955	BASIN 4
685	18-117_18-116	18-117	18-116	88	6	VITRIFIED CLAY PIPE	SANITARY SEWER	Active	1/1/1950	BASIN 4
686	18-119R_18-120	18-119R	18-120	420	6	VITRIFIED CLAY PIPE	SANITARY SEWER	Active	1/1/1944	BASIN 5
687	18-120_27-66	18-120	27-66	222	6	VITRIFIED CLAY PIPE	SANITARY SEWER	Active	1/1/1971	BASIN 5
688	18-121_19-22	18-121	19-22	425	6	VITRIFIED CLAY PIPE	SANITARY SEWER	Active	1/1/1971	BASIN 5

689	18-122_18-37	18-122	18-37	72	8	VITRIFIED CLAY PIPE	SANITARY SEWER	Active	9/29/1998	BASIN 4
690	18-123_19-12	18-123	19-12	400	8	VITRIFIED CLAY PIPE	SANITARY SEWER	Active	1/1/1955	BASIN 4
691	18-124_18-125	18-124	18-125	178	8	VITRIFIED CLAY PIPE	SANITARY SEWER	Active	1/30/2004	BASIN 4
692	18-125_18-115	18-125	18-115	172	8	VITRIFIED CLAY PIPE	SANITARY SEWER	Active	1/1/1995	BASIN 4
693	18-126_18-103	18-126	18-103	75	8	VITRIFIED CLAY PIPE	SANITARY SEWER	Active	1/1/1952	BASIN 4
694	18-128_18-129	18-128	18-129	73	8	VITRIFIED CLAY PIPE	SANITARY SEWER	Active		BASIN 5
695	18-129_27-126	18-129	27-126	120	8	VITRIFIED CLAY PIPE	SANITARY SEWER	Active		BASIN 5
696	18-12R_18-11	18-12R	18-11	64	6	VITRIFIED CLAY PIPE	SANITARY SEWER	Active	1/1/1955	BASIN 5
697	18-13_18-14	18-13	18-14	195	8	VITRIFIED CLAY PIPE	SANITARY SEWER	Active	1/1/1956	BASIN 5
698	18-130_18-123	18-130	18-123	47	8	VITRIFIED CLAY PIPE	SANITARY SEWER	Active	1/1/1955	BASIN 4
699	18-14_18-15	18-14	18-15	250	8	VITRIFIED CLAY PIPE	SANITARY SEWER	Active	1/1/1956	BASIN 5
700	18-15_18-16	18-15	18-16	179	8	VITRIFIED CLAY PIPE	SANITARY SEWER	Active	1/1/1956	BASIN 5
701	18-16_18-17	18-16	18-17	86	8	VITRIFIED CLAY PIPE	SANITARY SEWER	Active	1/1/1952	BASIN 5
702	18-17_18-18	18-17	18-18	214	8	VITRIFIED CLAY PIPE	SANITARY SEWER	Active	1/1/1952	BASIN 5
703	18-18_18-19	18-18	18-19	182	8	VITRIFIED CLAY PIPE	SANITARY SEWER	Active	1/1/1952	BASIN 5
704	18-19_27-69	18-19	27-69	267	8	VITRIFIED CLAY PIPE	SANITARY SEWER	Active	1/1/1945	BASIN 5
705	18-2_18-3	18-2	18-3	159	8	VITRIFIED CLAY PIPE	SANITARY SEWER	Active	1/1/1957	BASIN 5
706	18-20R_18-19	18-20R	18-19	153	8	VITRIFIED CLAY PIPE	SANITARY SEWER	Active	1/1/1952	BASIN 5
707	18-21_18-22	18-21	18-22	280	8	VITRIFIED CLAY PIPE	SANITARY SEWER	Active	1/1/1959	BASIN 5
708	18-22_18-23	18-22	18-23	72	8	VITRIFIED CLAY PIPE	SANITARY SEWER	Active	1/1/1959	BASIN 5
709	18-23_18-25	18-23	18-25	152	8	VITRIFIED CLAY PIPE	SANITARY SEWER	Active	1/1/1959	BASIN 5
710	18-24R_18-25	18-24R	18-25	144	6	VITRIFIED CLAY PIPE	SANITARY SEWER	Active	1/1/1944	BASIN 5
711	18-25_18-128	18-25	18-128	19	8	VITRIFIED CLAY PIPE	SANITARY SEWER	Active		BASIN 5
712	18-27_19-35	18-27	19-35	309	8	VITRIFIED CLAY PIPE	SANITARY SEWER	Active	1/1/1955	BASIN 4
713	18-28_19-31	18-28	19-31	306	8	VITRIFIED CLAY PIPE	SANITARY SEWER	Active	1/1/1953	BASIN 4
714	18-29R_19-87	18-29R	19-87	245	6	VITRIFIED CLAY PIPE	SANITARY SEWER	Active		BASIN 4
715	18-3_17-64	18-3	17-64	134	8	VITRIFIED CLAY PIPE	SANITARY SEWER	Active	1/1/1957	BASIN 5
716	18-30_18-38	18-30	18-38	42	8	VITRIFIED CLAY PIPE	SANITARY SEWER	Active	9/29/1998	BASIN 4
717	18-30_19-26	18-30	19-26	444	6	VITRIFIED CLAY PIPE	SANITARY SEWER	Active	1/1/1944	BASIN 4
718	18-31_18-30	18-31	18-30	215	6	VITRIFIED CLAY PIPE	SANITARY SEWER	Active	1/1/1964	BASIN 4
719	18-32R_18-31	18-32R	18-31	87	6	VITRIFIED CLAY PIPE	SANITARY SEWER	Active	1/1/1944	BASIN 4
720	18-33_18-31	18-33	18-31	365	6	VITRIFIED CLAY PIPE	SANITARY SEWER	Active	1/1/1964	BASIN 4
721	18-34_18-33	18-34	18-33	130	6	VITRIFIED CLAY PIPE	SANITARY SEWER	Active	1/1/1964	BASIN 4
724	18-35_18-33	18-35	18-33	155	6	VITRIFIED CLAY PIPE	SANITARY SEWER	Active	1/1/1964	BASIN 4
725	18-36_19-25	18-36	19-25	410	8	HIGH DENSITY POLYETHYLENE	SANITARY SEWER	Active	9/29/1998	BASIN 4
726	18-37_18-36	18-37	18-36	250	8	HIGH DENSITY POLYETHYLENE	SANITARY SEWER	Active	9/29/1998	BASIN 4
727	18-38_18-122	18-38	18-122	88	8	VITRIFIED CLAY PIPE	SANITARY SEWER	Active	9/29/1998	BASIN 4
728	18-39_18-38	18-39	18-38	125	8	VITRIFIED CLAY PIPE	SANITARY SEWER	Active	1/1/1950	BASIN 4
729	18-40_18-39	18-40	18-39	184	8	VITRIFIED CLAY PIPE	SANITARY SEWER	Active	1/1/1950	BASIN 4
730	18-41_18-114	18-41	18-114	144	8	VITRIFIED CLAY PIPE	SANITARY SEWER	Active	1/1/1950	BASIN 4
731	18-42_18-41	18-42	18-41	281	8	VITRIFIED CLAY PIPE	SANITARY SEWER	Active	1/1/1950	BASIN 4
732	18-43R_18-42	18-43R	18-42	90	8	VITRIFIED CLAY PIPE	SANITARY SEWER	Active	1/1/1950	BASIN 4
733	18-44R_18-45	18-44R	18-45	122	8	VITRIFIED CLAY PIPE	SANITARY SEWER	Active	1/1/1950	BASIN 4
734	18-45_18-46	18-45	18-46	402	8	VITRIFIED CLAY PIPE	SANITARY SEWER	Active	1/1/1950	BASIN 4
735	18-46_18-40	18-46	18-40	236	8	VITRIFIED CLAY PIPE	SANITARY SEWER	Active	1/1/1940	BASIN 4
736	18-47R_18-46	18-47R	18-46	90	8	VITRIFIED CLAY PIPE	SANITARY SEWER	Active	1/1/1950	BASIN 4
739	18-48_18-6	18-48	18-6	215	8	VITRIFIED CLAY PIPE	SANITARY SEWER	Active	1/1/1956	BASIN 5
740	18-49_18-48	18-49	18-48	215	8	VITRIFIED CLAY PIPE	SANITARY SEWER	Active	1/1/1956	BASIN 5
741	18-5_18-6	18-5	18-6	281	8	VITRIFIED CLAY PIPE	SANITARY SEWER	Active	1/1/1957	BASIN 5
742	18-50R_18-49	18-50R	18-49	115	8	VITRIFIED CLAY PIPE	SANITARY SEWER	Active	1/1/1956	BASIN 5
743	18-53_19-96	18-53	19-96	150	8	VITRIFIED CLAY PIPE	SANITARY SEWER	Active	1/1/1972	BASIN 4
744	18-54_18-53	18-54	18-53	118	8	VITRIFIED CLAY PIPE	SANITARY SEWER	Active	1/1/1952	BASIN 4
745	18-55_18-54	18-55	18-54	170	8	VITRIFIED CLAY PIPE	SANITARY SEWER	Active	1/1/1952	BASIN 4
746	18-56_18-53	18-56	18-53	120	8	VITRIFIED CLAY PIPE	SANITARY SEWER	Active	1/1/1972	BASIN 4
747	18-57R_18-56	18-57R	18-56	355	8	VITRIFIED CLAY PIPE	SANITARY SEWER	Active	1/1/1972	BASIN 4
748	18-58_18-122	18-58	18-122	450	6	VITRIFIED CLAY PIPE	SANITARY SEWER	Active	1/1/1944	BASIN 4
749	18-59_18-58	18-59	18-58	49	6	VITRIFIED CLAY PIPE	SANITARY SEWER	Active	1/1/1947	BASIN 4
750	18-6_18-9	18-6	18-9	311	8	VITRIFIED CLAY PIPE	SANITARY SEWER	Active	1/1/1954	BASIN 5
751	18-60R_18-59	18-60R	18-59	242	6	VITRIFIED CLAY PIPE	SANITARY SEWER	Active	1/1/1944	BASIN 4
752	18-61_18-59	18-61	18-59	281	6	VITRIFIED CLAY PIPE	SANITARY SEWER	Active	1/1/1948	BASIN 4
753	18-62_18-61	18-62	18-61	171	6	VITRIFIED CLAY PIPE	SANITARY SEWER	Active	1/1/1948	BASIN 4
754	18-63_18-62	18-63	18-62	421	6	VITRIFIED CLAY PIPE	SANITARY SEWER	Active	1/1/1948	BASIN 4
755	18-64_18-63	18-64	18-63	152	8	VITRIFIED CLAY PIPE	SANITARY SEWER	Active	1/1/1950	BASIN 4
756	18-65_18-64	18-65	18-64	112	8	VITRIFIED CLAY PIPE	SANITARY SEWER	Active	1/1/1950	BASIN 4
757	18-66R_18-65	18-66R	18-65	296	8	VITRIFIED CLAY PIPE	SANITARY SEWER	Active	1/1/1951	BASIN 4
758	18-67R_18-68	18-67R	18-68	290	6	VITRIFIED CLAY PIPE	SANITARY SEWER	Active	1/1/1950	BASIN 4
759	18-68_18-69	18-68	18-69	256	6	VITRIFIED CLAY PIPE	SANITARY SEWER	Active	1/1/1950	BASIN 4
760	18-69_18-70	18-69	18-70	202	6	VITRIFIED CLAY PIPE	SANITARY SEWER	Active	1/1/1950	BASIN 4
761	18-7_18-6	18-7	18-6	83	8	VITRIFIED CLAY PIPE	SANITARY SEWER	Active	1/1/1956	BASIN 5
762	18-70_18-61	18-70	18-61	250	6	VITRIFIED CLAY PIPE	SANITARY SEWER	Active	1/1/1950	BASIN 4
763	18-71_19-14	18-71	19-14	251	8	VITRIFIED CLAY PIPE	SANITARY SEWER	Active	1/1/1955	BASIN 4
764	18-72R_18-71	18-72R	18-71	272	8	VITRIFIED CLAY PIPE	SANITARY SEWER	Active	1/1/1956	BASIN 4
765	18-78_10-120	18-78	10-120	131	6	VITRIFIED CLAY PIPE	SANITARY SEWER	Active	1/1/1949	BASIN 4

766	18-79_18-78	18-79	18-78	72	6	VITRIFIED CLAY PIPE	SANITARY SEWER	Active	1/1/1949	BASIN 4
767	18-8_18-7	18-8	18-7	123	8	VITRIFIED CLAY PIPE	SANITARY SEWER	Active	1/1/1956	BASIN 5
768	18-80R_18-79	18-80R	18-79	213	8	VITRIFIED CLAY PIPE	SANITARY SEWER	Active	1/1/1952	BASIN 4
769	18-81R_18-115	18-81R	18-115	250	8	VITRIFIED CLAY PIPE	SANITARY SEWER	Active	1/1/1955	BASIN 4
770	18-82_18-117	18-82	18-117	64	6	VITRIFIED CLAY PIPE	SANITARY SEWER	Active	1/1/1950	BASIN 4
771	18-83R_18-82	18-83R	18-82	355	6	VITRIFIED CLAY PIPE	SANITARY SEWER	Active	1/1/1944	BASIN 4
772	18-84_18-117	18-84	18-117	152	8	VITRIFIED CLAY PIPE	SANITARY SEWER	Active	1/1/1950	BASIN 4
773	18-85R_18-86	18-85R	18-86	140	6	VITRIFIED CLAY PIPE	SANITARY SEWER	Active	1/1/1951	BASIN 4
774	18-86_18-84	18-86	18-84	130	8	VITRIFIED CLAY PIPE	SANITARY SEWER	Active	1/1/1950	BASIN 4
775	18-87_18-86	18-87	18-86	245	8	VITRIFIED CLAY PIPE	SANITARY SEWER	Active	1/1/1950	BASIN 4
776	18-88R_18-87	18-88R	18-87	118	6	VITRIFIED CLAY PIPE	SANITARY SEWER	Active	1/1/1950	BASIN 4
777	18-89_18-87	18-89	18-87	393	8	VITRIFIED CLAY PIPE	SANITARY SEWER	Active	1/1/1950	BASIN 4
778	18-9_18-10	18-9	18-10	64	8	VITRIFIED CLAY PIPE	SANITARY SEWER	Active	1/1/1954	BASIN 5
779	18-90_18-89	18-90	18-89	290	8	VITRIFIED CLAY PIPE	SANITARY SEWER	Active	1/1/1950	BASIN 4
780	18-91R_18-92	18-91R	18-92	100	8	VITRIFIED CLAY PIPE	SANITARY SEWER	Active	1/1/1950	BASIN 4
781	18-92_18-90	18-92	18-90	145	8	VITRIFIED CLAY PIPE	SANITARY SEWER	Active	1/1/1950	BASIN 4
782	18-93R_18-92	18-93R	18-92	119	8	VITRIFIED CLAY PIPE	SANITARY SEWER	Active	1/1/1950	BASIN 4
783	18-94R_18-95	18-94R	18-95	200	8	VITRIFIED CLAY PIPE	SANITARY SEWER	Active	1/1/1974	BASIN 4
784	18-95_18-96	18-95	18-96	110	8	VITRIFIED CLAY PIPE	SANITARY SEWER	Active	1/1/1974	BASIN 4
785	18-96_18-98	18-96	18-98	134	8	VITRIFIED CLAY PIPE	SANITARY SEWER	Active	1/1/1952	BASIN 4
786	18-97_18-96	18-97	18-96	326	8	VITRIFIED CLAY PIPE	SANITARY SEWER	Active	1/1/1952	BASIN 4
787	18-98_18-86	18-98	18-86	322	8	VITRIFIED CLAY PIPE	SANITARY SEWER	Active	1/1/1951	BASIN 4
788	18-99_18-98	18-99	18-98	362	8	VITRIFIED CLAY PIPE	SANITARY SEWER	Active	1/1/1950	BASIN 4
789	19-1_19-3	19-1	19-3	77	6	VITRIFIED CLAY PIPE	SANITARY SEWER	Active	1/1/1949	BASIN 4
790	19-100_19-32	19-100	19-32	366	6	VITRIFIED CLAY PIPE	SANITARY SEWER	Active	1/1/1944	BASIN 4
791	19-101_19-102	19-101	19-102	358	12	HIGH DENSITY POLYETHYLENE	SANITARY SEWER	Active	8/1/2016	BASIN 5
792	19-102_19-110	19-102	19-110	317	12	HIGH DENSITY POLYETHYLENE	SANITARY SEWER	Active	7/27/2016	BASIN 5
793	19-103_19-107	19-103	19-107	300	18	VITRIFIED CLAY PIPE	SANITARY SEWER	Active		BASIN 5
794	19-104_19-103	19-104	19-103	33	18	DUCTILE IRON PIPE	SANITARY SEWER	Active		BASIN 5
795	19-105_19-38	19-105	19-38	40	8	VITRIFIED CLAY PIPE	SANITARY SEWER	Active	1/1/1953	BASIN 4
796	19-106_19-21	19-106	19-21	85	8	CAST IRON PIPE	SANITARY SEWER	Active	1/1/1967	BASIN 4
797	19-107_20-12	19-107	20-12	275	18	VITRIFIED CLAY PIPE	SANITARY SEWER	Active		BASIN 5
798	19-108_20-92	19-108	20-92	509	6	VITRIFIED CLAY PIPE	SANITARY SEWER	Active	1/1/1944	BASIN 6
799	19-109_19-104	19-109	19-104	43	16	DUCTILE IRON PIPE	SANITARY SEWER	Active		BASIN 5
800	19-10R_19-9	19-10R	19-9	195	6	VITRIFIED CLAY PIPE	SANITARY SEWER	Active	1/1/1944	BASIN 4
801	19-110_19-104	19-110	19-104	40	16	DUCTILE IRON PIPE	SANITARY SEWER	Active		BASIN 5
802	19-12_19-13	19-12	19-13	338	6	VITRIFIED CLAY PIPE	SANITARY SEWER	Active		BASIN 4
803	19-13_19-16	19-13	19-16	20	6	VITRIFIED CLAY PIPE	SANITARY SEWER	Active		BASIN 4
804	19-14_19-13	19-14	19-13	318	8	VITRIFIED CLAY PIPE	SANITARY SEWER	Active	1/1/1955	BASIN 4
805	19-15R_19-14	19-15R	19-14	168	8	VITRIFIED CLAY PIPE	SANITARY SEWER	Active	1/1/1955	BASIN 4
806	19-16_19-55	19-16	19-55	426	6	VITRIFIED CLAY PIPE	SANITARY SEWER	Active	1/1/1944	BASIN 4
807	19-17_19-16	19-17	19-16	224	6	VITRIFIED CLAY PIPE	SANITARY SEWER	Active	1/1/1952	BASIN 4
808	19-18R_19-17	19-18R	19-17	135	6	VITRIFIED CLAY PIPE	SANITARY SEWER	Active	1/1/1944	BASIN 4
809	19-19_19-24	19-19	19-24	200	6	VITRIFIED CLAY PIPE	SANITARY SEWER	Active	1/1/1961	BASIN 4
810	19-20_19-19	19-20	19-19	210	6	VITRIFIED CLAY PIPE	SANITARY SEWER	Active	1/1/1965	BASIN 4
811	19-21_19-17	19-21	19-17	230	8	VITRIFIED CLAY PIPE	SANITARY SEWER	Active	1/1/1965	BASIN 4
812	19-21_19-20	19-21	19-20	150	6	CAST IRON PIPE	SANITARY SEWER	Active		BASIN 4
813	19-22_28-83	19-22	28-83	165	6	VITRIFIED CLAY PIPE	SANITARY SEWER	Active	1/1/1971	BASIN 5
814	19-23_19-20	19-23	19-20	113	6	VITRIFIED CLAY PIPE	SANITARY SEWER	Active	1/1/1961	BASIN 4
815	19-24_19-27	19-24	19-27	132	8	HIGH DENSITY POLYETHYLENE	SANITARY SEWER	Active	9/29/1998	BASIN 4
816	19-25_19-24	19-25	19-24	190	8	HIGH DENSITY POLYETHYLENE	SANITARY SEWER	Active	9/29/1998	BASIN 4
817	19-26_19-27	19-26	19-27	459	6	VITRIFIED CLAY PIPE	SANITARY SEWER	Active	1/1/1944	BASIN 4
818	19-27_19-28	19-27	19-28	110	8	HIGH DENSITY POLYETHYLENE	SANITARY SEWER	Active	9/29/1998	BASIN 4
819	19-28_19-29	19-28	19-29	134	8	HIGH DENSITY POLYETHYLENE	SANITARY SEWER	Active	9/29/1998	BASIN 4
820	19-29_19-36	19-29	19-36	152	8	HIGH DENSITY POLYETHYLENE	SANITARY SEWER	Active	9/29/1998	BASIN 4
821	19-2R_19-7	19-2R	19-7	176	8	VITRIFIED CLAY PIPE	SANITARY SEWER	Active	1/1/1956	BASIN 4
823	19-3_19-4	19-3	19-4	77	6	VITRIFIED CLAY PIPE	SANITARY SEWER	Active	1/1/1949	BASIN 4
824	19-30_19-29	19-30	19-29	108	8	VITRIFIED CLAY PIPE	SANITARY SEWER	Active	11/10/2008	BASIN 4
825	19-31_19-30	19-31	19-30	500	8	VITRIFIED CLAY PIPE	SANITARY SEWER	Active	1/1/1953	BASIN 4
826	19-32_19-30	19-32	19-30	178	6	VITRIFIED CLAY PIPE	SANITARY SEWER	Active	1/1/1955	BASIN 4
827	19-33_19-32	19-33	19-32	169	8	VITRIFIED CLAY PIPE	SANITARY SEWER	Active	1/1/1955	BASIN 4
828	19-34_19-33	19-34	19-33	111	8	VITRIFIED CLAY PIPE	SANITARY SEWER	Active	1/1/1955	BASIN 4
829	19-35_19-34	19-35	19-34	101	8	VITRIFIED CLAY PIPE	SANITARY SEWER	Active	1/1/1955	BASIN 4
830	19-36_19-37	19-36	19-37	388	6	VITRIFIED CLAY PIPE	SANITARY SEWER	Active	1/1/1959	BASIN 4
831	19-37_19-105	19-37	19-105	369	8	VITRIFIED CLAY PIPE	SANITARY SEWER	Active	1/1/1953	BASIN 4
832	19-38_19-42	19-38	19-42	289	8	VITRIFIED CLAY PIPE	SANITARY SEWER	Active	1/1/1953	BASIN 4
833	19-39_19-40	19-39	19-40	375	6	VITRIFIED CLAY PIPE	SANITARY SEWER	Active	1/1/1944	BASIN 4
834	19-4_19-5	19-4	19-5	164	6	VITRIFIED CLAY PIPE	SANITARY SEWER	Active	1/1/1949	BASIN 4
835	19-40_19-41	19-40	19-41	371	6	VITRIFIED CLAY PIPE	SANITARY SEWER	Active	1/1/1944	BASIN 4
836	19-41_19-42	19-41	19-42	10	6	VITRIFIED CLAY PIPE	SANITARY SEWER	Active	1/1/1953	BASIN 4
837	19-42_19-43	19-42	19-43	106	8	VITRIFIED CLAY PIPE	SANITARY SEWER	Active	1/1/1953	BASIN 4
838	19-43_19-44	19-43	19-44	360	8	VITRIFIED CLAY PIPE	SANITARY SEWER	Active	1/1/1953	BASIN 4
839	19-44_19-45	19-44	19-45	190	8	VITRIFIED CLAY PIPE	SANITARY SEWER	Active	1/1/1953	BASIN 4

840	19-45_20-7	19-45	20-7	109	10	HIGH DENSITY POLYETHYLENE	SANITARY SEWER	Active	8/29/2017	BASIN 4
841	19-46_19-45	19-46	19-45	253	8	VITRIFIED CLAY PIPE	SANITARY SEWER	Active	1/1/1959	BASIN 4
842	19-47_19-46	19-47	19-46	411	8	VITRIFIED CLAY PIPE	SANITARY SEWER	Active	1/1/1959	BASIN 4
843	19-48R_19-47	19-48R	19-47	230	8	VITRIFIED CLAY PIPE	SANITARY SEWER	Active	1/1/1959	BASIN 4
844	19-49R_19-41	19-49R	19-41	176	6	VITRIFIED CLAY PIPE	SANITARY SEWER	Active	1/1/1944	BASIN 4
846	19-5_19-6	19-5	19-6	21	8	HIGH DENSITY POLYETHYLENE	SANITARY SEWER	Active	12/21/2000	BASIN 4
847	19-50R_19-51	19-50R	19-51	130	8	VITRIFIED CLAY PIPE	SANITARY SEWER	Active	1/1/1959	BASIN 4
848	19-51_19-56	19-51	19-56	117	6	VITRIFIED CLAY PIPE	SANITARY SEWER	Active	1/1/1944	BASIN 4
849	19-52_19-51	19-52	19-51	184	8	VITRIFIED CLAY PIPE	SANITARY SEWER	Active	1/1/1949	BASIN 4
850	19-53_19-52	19-53	19-52	463	8	VITRIFIED CLAY PIPE	SANITARY SEWER	Active	1/1/1949	BASIN 4
851	19-54R_19-53	19-54R	19-53	105	8	VITRIFIED CLAY PIPE	SANITARY SEWER	Active	1/1/1968	BASIN 4
852	19-55_19-56	19-55	19-56	453	8	HIGH DENSITY POLYETHYLENE	SANITARY SEWER	Active	6/21/2016	BASIN 4
853	19-56_19-57	19-56	19-57	96	8	VITRIFIED CLAY PIPE	SANITARY SEWER	Active		BASIN 4
855	19-57_19-58	19-57	19-58	78	8	VITRIFIED CLAY PIPE	SANITARY SEWER	Active		BASIN 4
856	19-58_19-59	19-58	19-59	386	8	VITRIFIED CLAY PIPE	SANITARY SEWER	Active	1/1/1949	BASIN 4
857	19-59_20-5	19-59	20-5	400	8	VITRIFIED CLAY PIPE	SANITARY SEWER	Active	1/1/1949	BASIN 4
858	19-6_19-8	19-6	19-8	202	8	HIGH DENSITY POLYETHYLENE	SANITARY SEWER	Active	12/21/2000	BASIN 4
860	19-60_19-56	19-60	19-56	107	8	HIGH DENSITY POLYETHYLENE	SANITARY SEWER	Active	7/14/2017	BASIN 4
861	19-61_19-60	19-61	19-60	119	8	HIGH DENSITY POLYETHYLENE	SANITARY SEWER	Active	7/14/2017	BASIN 4
862	19-62_19-61	19-62	19-61	333	8	HIGH DENSITY POLYETHYLENE	SANITARY SEWER	Active	7/14/2017	BASIN 4
863	19-63_19-62	19-63	19-62	365	6	VITRIFIED CLAY PIPE	SANITARY SEWER	Active	1/1/1948	BASIN 4
864	19-64R_19-65	19-64R	19-65	214	6	VITRIFIED CLAY PIPE	SANITARY SEWER	Active	1/1/1949	BASIN 4
865	19-65_19-66	19-65	19-66	320	6	VITRIFIED CLAY PIPE	SANITARY SEWER	Active	1/1/1949	BASIN 4
866	19-66_19-67	19-66	19-67	283	6	VITRIFIED CLAY PIPE	SANITARY SEWER	Active	1/1/1949	BASIN 4
867	19-67_19-60	19-67	19-60	268	6	VITRIFIED CLAY PIPE	SANITARY SEWER	Active	1/1/1948	BASIN 4
868	19-68R_19-69	19-68R	19-69	295	8	VITRIFIED CLAY PIPE	SANITARY SEWER	Active	1/1/1952	BASIN 4
869	19-69_19-70	19-69	19-70	300	8	VITRIFIED CLAY PIPE	SANITARY SEWER	Active	1/1/1952	BASIN 4
870	19-7_19-6	19-7	19-6	36	8	VITRIFIED CLAY PIPE	SANITARY SEWER	Active	1/1/1956	BASIN 4
871	19-70_20-4	19-70	20-4	397	8	VITRIFIED CLAY PIPE	SANITARY SEWER	Active	1/1/1953	BASIN 4
872	19-71_20-2	19-71	20-2	430	8	VITRIFIED CLAY PIPE	SANITARY SEWER	Active	1/1/1955	BASIN 4
873	19-72_11-52	19-72	11-52	607	6	VITRIFIED CLAY PIPE	SANITARY SEWER	Active	1/1/1945	BASIN 4
875	19-73_19-94	19-73	19-94	186	8	VITRIFIED CLAY PIPE	SANITARY SEWER	Active	1/1/1955	BASIN 4
876	19-74_19-73	19-74	19-73	142	8	VITRIFIED CLAY PIPE	SANITARY SEWER	Active	1/1/1955	BASIN 4
877	19-75_19-74	19-75	19-74	240	8	VITRIFIED CLAY PIPE	SANITARY SEWER	Active	1/1/1955	BASIN 4
878	19-76_19-75	19-76	19-75	169	8	VITRIFIED CLAY PIPE	SANITARY SEWER	Active	1/1/1955	BASIN 4
879	19-77_19-74	19-77	19-74	385	8	VITRIFIED CLAY PIPE	SANITARY SEWER	Active	1/1/1955	BASIN 4
880	19-78R_19-80	19-78R	19-80	120	8	VITRIFIED CLAY PIPE	SANITARY SEWER	Active	1/1/1956	BASIN 3
881	19-79_11-91	19-79	11-91	300	8	VITRIFIED CLAY PIPE	SANITARY SEWER	Active	1/1/1950	BASIN 3
882	19-8_19-9	19-8	19-9	40	8	VITRIFIED CLAY PIPE	SANITARY SEWER	Active	1/1/1955	BASIN 4
883	19-80_19-79	19-80	19-79	85	8	VITRIFIED CLAY PIPE	SANITARY SEWER	Active	1/1/1956	BASIN 3
884	19-81_19-80	19-81	19-80	125	8	VITRIFIED CLAY PIPE	SANITARY SEWER	Active	1/1/1956	BASIN 3
885	19-82_19-81	19-82	19-81	132	8	VITRIFIED CLAY PIPE	SANITARY SEWER	Active	1/1/1956	BASIN 3
886	19-83_19-82	19-83	19-82	203	8	VITRIFIED CLAY PIPE	SANITARY SEWER	Active	1/1/1956	BASIN 3
887	19-84_19-83	19-84	19-83	192	8	VITRIFIED CLAY PIPE	SANITARY SEWER	Active	1/1/1956	BASIN 3
888	19-85_19-84	19-85	19-84	186	8	VITRIFIED CLAY PIPE	SANITARY SEWER	Active	1/1/1959	BASIN 3
889	19-87_19-28	19-87	19-28	450	6	VITRIFIED CLAY PIPE	SANITARY SEWER	Active		BASIN 4
890	19-89R_19-12	19-89R	19-12	49	6	VITRIFIED CLAY PIPE	SANITARY SEWER	Active	1/1/1955	BASIN 4
891	19-9_19-77	19-9	19-77	578	8	VITRIFIED CLAY PIPE	SANITARY SEWER	Active	1/1/1955	BASIN 4
892	19-90_11-103	19-90	11-103	278	8	VITRIFIED CLAY PIPE	SANITARY SEWER	Active	1/1/1984	BASIN 4
893	19-91_19-90	19-91	19-90	246	8	VITRIFIED CLAY PIPE	SANITARY SEWER	Active	1/1/1984	BASIN 4
895	19-91_19-92	19-91	19-92	245	8	VITRIFIED CLAY PIPE	SANITARY SEWER	Active	1/1/1984	BASIN 4
896	19-92_19-93	19-92	19-93	237	10	VITRIFIED CLAY PIPE	SANITARY SEWER	Active	1/1/1984	BASIN 4
897	19-93_19-94	19-93	19-94	220	10	VITRIFIED CLAY PIPE	SANITARY SEWER	Active	1/1/1984	BASIN 4
898	19-94_19-95	19-94	19-95	100	10	VITRIFIED CLAY PIPE	SANITARY SEWER	Active	1/1/1984	BASIN 4
899	19-95_19-71	19-95	19-71	313	8	VITRIFIED CLAY PIPE	SANITARY SEWER	Active	1/1/1984	BASIN 4
900	19-96_19-106	19-96	19-106	85	8	VITRIFIED CLAY PIPE	SANITARY SEWER	Active	1/1/1952	BASIN 4
901	19-98_19-99	19-98	19-99	220	8	VITRIFIED CLAY PIPE	SANITARY SEWER	Active	1/1/1967	BASIN 4
902	19-99_19-100	19-99	19-100	125	6	VITRIFIED CLAY PIPE	SANITARY SEWER	Active	1/1/1967	BASIN 4
903	1-9R_1-8	1-9R	1-8	58	6	VITRIFIED CLAY PIPE	SANITARY SEWER	Active	1/1/1949	BASIN 1
904	20-1_12-41	20-1	12-41	436	8	VITRIFIED CLAY PIPE	SANITARY SEWER	Active	1/1/1956	BASIN 4
905	20-10_20-9	20-10	20-9	375	12	VITRIFIED CLAY PIPE	SANITARY SEWER	Active	1/1/1953	BASIN 4
906	20-100_20-18	20-100	20-18	118	6	VITRIFIED CLAY PIPE	SANITARY SEWER	Active	1/1/1948	BASIN 6
907	20-101_20-99	20-101	20-99	178	18	VITRIFIED CLAY PIPE	SANITARY SEWER	Active		BASIN 5
908	20-102_20-101	20-102	20-101	203	18	VITRIFIED CLAY PIPE	SANITARY SEWER	Active		BASIN 5
909	20-103_20-102	20-103	20-102	60	18	VITRIFIED CLAY PIPE	SANITARY SEWER	Active		BASIN 5
910	20-104_20-103	20-104	20-103	241	18	VITRIFIED CLAY PIPE	SANITARY SEWER	Active		BASIN 5
911	20-105_20-104	20-105	20-104	224	18	VITRIFIED CLAY PIPE	SANITARY SEWER	Active		BASIN 5
912	20-106_20-11	20-106	20-11	105	12	VITRIFIED CLAY PIPE	SANITARY SEWER	Active	1/1/1953	BASIN 5
913	20-107_20-109	20-107	20-109	228	8	HIGH DENSITY POLYETHYLENE	SANITARY SEWER	Active	7/24/2017	BASIN 4
914	20-108_20-107	20-108	20-107	125	8	DUCTILE IRON PIPE	SANITARY SEWER	Active	9/15/2014	BASIN 4
915	20-109_20-50	20-109	20-50	206	8	HIGH DENSITY POLYETHYLENE	SANITARY SEWER	Active	7/24/2017	BASIN 4
916	20-11_20-21	20-11	20-21	221	12	VITRIFIED CLAY PIPE	SANITARY SEWER	Active	1/1/1953	BASIN 5
917	20-110_20-27	20-110	20-27	282	8	HIGH DENSITY POLYETHYLENE	SANITARY SEWER	Active	8/4/2017	BASIN 4

918	20-111_20-88	20-111	20-88	73	6	VITRIFIED CLAY PIPE	SANITARY SEWER	Active	1/1/1944	BASIN 4
919	20-112_20-111	20-112	20-111	114	8	VITRIFIED CLAY PIPE	SANITARY SEWER	Active	5/18/2018	BASIN 4
920	20-113_20-112	20-113	20-112	234	8	DUCTILE IRON PIPE	SANITARY SEWER	Active	7/17/2018	BASIN 4
927	20-114_20-39	20-114	20-39	417	8	HIGH DENSITY POLYETHYLENE	SANITARY SEWER	Active	9/7/2018	BASIN 4
928	20-115_20-114	20-115	20-114	115	8	HIGH DENSITY POLYETHYLENE	SANITARY SEWER	Active	7/12/2018	BASIN 4
929	20-116_20-115	20-116	20-115	147	8	HIGH DENSITY POLYETHYLENE	SANITARY SEWER	Active	7/12/2018	BASIN 4
930	20-117_20-115	20-117	20-115	20	8	HIGH DENSITY POLYETHYLENE	SANITARY SEWER	Active	7/12/2018	BASIN 4
931	20-118_20-117	20-118	20-117	34	8	HIGH DENSITY POLYETHYLENE	SANITARY SEWER	Active	7/12/2018	BASIN 4
933	20-119_20-118	20-119	20-118	177	8	HIGH DENSITY POLYETHYLENE	SANITARY SEWER	Active	7/12/2018	BASIN 4
934	20-12_20-105	20-12	20-105	39	18	VITRIFIED CLAY PIPE	SANITARY SEWER	Active		BASIN 5
935	20-120_20-119	20-120	20-119	193	8	HIGH DENSITY POLYETHYLENE	SANITARY SEWER	Active	7/12/2018	BASIN 4
936	20-13_20-14	20-13	20-14	354	6	VITRIFIED CLAY PIPE	SANITARY SEWER	Active	1/1/1948	BASIN 6
940	20-14_20-16	20-14	20-16	272	6	VITRIFIED CLAY PIPE	SANITARY SEWER	Active	1/1/1948	BASIN 6
941	20-15_20-26	20-15	20-26	592	6	VITRIFIED CLAY PIPE	SANITARY SEWER	Active	1/1/1944	BASIN 4
942	20-16_20-17	20-16	20-17	223	6	VITRIFIED CLAY PIPE	SANITARY SEWER	Active	1/1/1948	BASIN 6
943	20-17_20-99	20-17	20-99	34	8	VITRIFIED CLAY PIPE	SANITARY SEWER	Active		BASIN 5
944	20-18_20-33	20-18	20-33	380	6	VITRIFIED CLAY PIPE	SANITARY SEWER	Active	1/1/1944	BASIN 6
945	20-19_20-18	20-19	20-18	319	6	VITRIFIED CLAY PIPE	SANITARY SEWER	Active	1/1/1952	BASIN 6
946	20-2_20-57	20-2	20-57	160	8	VITRIFIED CLAY PIPE	SANITARY SEWER	Active	1/1/1955	BASIN 4
947	20-20_20-86	20-20	20-86	85	8	VITRIFIED CLAY PIPE	SANITARY SEWER	Active	1/1/1990	BASIN 6
948	20-21_20-10	20-21	20-10	187	12	VITRIFIED CLAY PIPE	SANITARY SEWER	Active		BASIN 5
949	20-21R_20-20	20-21R	20-20	283	6	VITRIFIED CLAY PIPE	SANITARY SEWER	Active		BASIN 6
950	20-22_20-94	20-22	20-94	28	8	VITRIFIED CLAY PIPE	SANITARY SEWER	Active	1/1/1952	BASIN 6
951	20-23_20-22	20-23	20-22	58	8	VITRIFIED CLAY PIPE	SANITARY SEWER	Active	1/1/1952	BASIN 6
952	20-24_20-23	20-24	20-23	115	8	VITRIFIED CLAY PIPE	SANITARY SEWER	Active	1/1/1952	BASIN 6
953	20-25R_20-24	20-25R	20-24	192	8	VITRIFIED CLAY PIPE	SANITARY SEWER	Active	1/1/1952	BASIN 6
954	20-26_20-110	20-26	20-110	294	8	HIGH DENSITY POLYETHYLENE	SANITARY SEWER	Active	8/4/2017	BASIN 4
955	20-27_20-53	20-27	20-53	204	15	VITRIFIED CLAY PIPE	SANITARY SEWER	Active	1/1/1953	BASIN 4
956	20-28_20-29	20-28	20-29	448	6	VITRIFIED CLAY PIPE	SANITARY SEWER	Active	1/1/1944	BASIN 4
957	20-29_20-70	20-29	20-70	121	6	VITRIFIED CLAY PIPE	SANITARY SEWER	Active	1/1/1944	BASIN 4
958	20-3_20-2	20-3	20-2	163	8	VITRIFIED CLAY PIPE	SANITARY SEWER	Active	1/1/1953	BASIN 4
959	20-30_20-53	20-30	20-53	296	6	VITRIFIED CLAY PIPE	SANITARY SEWER	Active	1/1/1950	BASIN 4
960	20-31R_20-30	20-31R	20-30	75	6	VITRIFIED CLAY PIPE	SANITARY SEWER	Active	1/1/1950	BASIN 4
961	20-32_20-89	20-32	20-89	155	6	VITRIFIED CLAY PIPE	SANITARY SEWER	Active	1/1/1944	BASIN 4
962	20-33_20-43	20-33	20-43	71	6	VITRIFIED CLAY PIPE	SANITARY SEWER	Active	1/1/1944	BASIN 6
963	20-35R_20-36	20-35R	20-36	95	6	VITRIFIED CLAY PIPE	SANITARY SEWER	Active	1/1/1948	BASIN 4
964	20-36_20-38	20-36	20-38	125	6	VITRIFIED CLAY PIPE	SANITARY SEWER	Active	1/1/1944	BASIN 4
965	20-36_21-9	20-36	21-9	253	6	VITRIFIED CLAY PIPE	SANITARY SEWER	Active	1/1/1948	BASIN 4
966	20-37_20-36	20-37	20-36	287	6	VITRIFIED CLAY PIPE	SANITARY SEWER	Active	1/1/1948	BASIN 4
967	20-38_20-114	20-38	20-114	43	6	VITRIFIED CLAY PIPE	SANITARY SEWER	Active	1/1/1944	BASIN 6
968	20-39_20-40	20-39	20-40	450	8	HIGH DENSITY POLYETHYLENE	SANITARY SEWER	Active	9/7/2018	BASIN 4
969	20-4_20-3	20-4	20-3	173	8	VITRIFIED CLAY PIPE	SANITARY SEWER	Active	1/1/1953	BASIN 4
970	20-40_21-11	20-40	21-11	318	8	VITRIFIED CLAY PIPE	SANITARY SEWER	Active	1/1/1944	BASIN 6
971	20-41_20-40	20-41	20-40	28	6	VITRIFIED CLAY PIPE	SANITARY SEWER	Active	1/1/1944	BASIN 6
972	20-42_20-41	20-42	20-41	140	6	VITRIFIED CLAY PIPE	SANITARY SEWER	Active	1/1/1944	BASIN 6
973	20-43_20-82	20-43	20-82	82	8	VITRIFIED CLAY PIPE	SANITARY SEWER	Active	1/1/1944	BASIN 6
975	20-44R_20-43	20-44R	20-43	65	6	VITRIFIED CLAY PIPE	SANITARY SEWER	Active		BASIN 6
976	20-45_21-89	20-45	21-89	174	8	HIGH DENSITY POLYETHYLENE	SANITARY SEWER	Active	7/23/2010	BASIN 4
978	20-46_20-45	20-46	20-45	253	8	VITRIFIED CLAY PIPE	SANITARY SEWER	Active	1/1/1954	BASIN 4
979	20-47_20-46	20-47	20-46	227	8	VITRIFIED CLAY PIPE	SANITARY SEWER	Active	1/1/1954	BASIN 4
981	20-48_20-47	20-48	20-47	401	8	VITRIFIED CLAY PIPE	SANITARY SEWER	Active	1/1/1954	BASIN 4
982	20-49R_20-48	20-49R	20-48	112	8	VITRIFIED CLAY PIPE	SANITARY SEWER	Active	1/1/1955	BASIN 4
983	20-5_20-54	20-5	20-54	400	8	VITRIFIED CLAY PIPE	SANITARY SEWER	Active	1/1/1949	BASIN 4
984	20-50_20-45	20-50	20-45	216	6	VITRIFIED CLAY PIPE	SANITARY SEWER	Active	1/1/1944	BASIN 4
985	20-51_20-107	20-51	20-107	29	8	HIGH DENSITY POLYETHYLENE	SANITARY SEWER	Active	7/24/2017	BASIN 4
986	20-52_20-51	20-52	20-51	570	6	VITRIFIED CLAY PIPE	SANITARY SEWER	Active	1/1/1944	BASIN 4
987	20-53_20-54	20-53	20-54	313	15	VITRIFIED CLAY PIPE	SANITARY SEWER	Active	1/1/1953	BASIN 4
988	20-54_20-55	20-54	20-55	60	15	VITRIFIED CLAY PIPE	SANITARY SEWER	Active	1/1/1953	BASIN 4
989	20-55_20-56	20-55	20-56	332	15	VITRIFIED CLAY PIPE	SANITARY SEWER	Active	1/1/1953	BASIN 4
990	20-56_20-57	20-56	20-57	168	15	VITRIFIED CLAY PIPE	SANITARY SEWER	Active	1/1/1953	BASIN 4
991	20-57_20-58	20-57	20-58	463	15	VITRIFIED CLAY PIPE	SANITARY SEWER	Active	1/1/1953	BASIN 4
992	20-58_20-59	20-58	20-59	417	15	VITRIFIED CLAY PIPE	SANITARY SEWER	Active	1/1/1953	BASIN 4
993	20-59_20-61	20-59	20-61	240	15	VITRIFIED CLAY PIPE	SANITARY SEWER	Active	1/1/1959	BASIN 4
994	20-61_20-62	20-61	20-62	22	15	VITRIFIED CLAY PIPE	SANITARY SEWER	Active	1/1/1959	BASIN 4
995	20-62_20-64	20-62	20-64	295	15	VITRIFIED CLAY PIPE	SANITARY SEWER	Active	1/1/1959	BASIN 4
996	20-63R_20-77	20-63R	20-77	77	6	VITRIFIED CLAY PIPE	SANITARY SEWER	Active	1/1/1944	BASIN 4
997	20-64_20-65	20-64	20-65	177	15	VITRIFIED CLAY PIPE	SANITARY SEWER	Active	1/1/1959	BASIN 4
998	20-65_21-2	20-65	21-2	504	15	VITRIFIED CLAY PIPE	SANITARY SEWER	Active	1/1/1953	BASIN 4
1008	20-66_20-84	20-66	20-84	105	6	VITRIFIED CLAY PIPE	SANITARY SEWER	Active		BASIN 4
1009	20-67R_20-66	20-67R	20-66	300	6	VITRIFIED CLAY PIPE	SANITARY SEWER	Active		BASIN 4
1010	20-68_21-3	20-68	21-3	455	6	VITRIFIED CLAY PIPE	SANITARY SEWER	Active	1/1/1950	BASIN 4
1011	20-69_20-19	20-69	20-19	144	6	VITRIFIED CLAY PIPE	SANITARY SEWER	Active	1/1/1952	BASIN 6
1012	20-6R_19-46	20-6R	19-46	85	8	VITRIFIED CLAY PIPE	SANITARY SEWER	Active	1/1/1959	BASIN 4

1013	20-7_20-8	20-7	20-8	124	15	VITRIFIED CLAY PIPE	SANITARY SEWER	Active	1/1/1953	BASIN 4
1014	20-70_20-111	20-70	20-111	99	6	VITRIFIED CLAY PIPE	SANITARY SEWER	Active	1/1/1944	BASIN 4
1015	20-75_20-69	20-75	20-69	113	6	VITRIFIED CLAY PIPE	SANITARY SEWER	Active	1/1/1944	BASIN 6
1016	20-76_20-75	20-76	20-75	298	8	DUCTILE IRON PIPE	SANITARY SEWER	Active	1/1/1980	BASIN 6
1017	20-77_20-66	20-77	20-66	370	6	VITRIFIED CLAY PIPE	SANITARY SEWER	Active	1/1/1944	BASIN 4
1018	20-78_20-77	20-78	20-77	325	8	VITRIFIED CLAY PIPE	SANITARY SEWER	Active	1/1/1984	BASIN 4
1019	20-79_20-80	20-79	20-80	298	8	VITRIFIED CLAY PIPE	SANITARY SEWER	Active	1/1/1986	BASIN 4
1020	20-8_20-80	20-8	20-80	120	15	VITRIFIED CLAY PIPE	SANITARY SEWER	Active	1/1/1986	BASIN 4
1021	20-80_20-27	20-80	20-27	260	15	VITRIFIED CLAY PIPE	SANITARY SEWER	Active	1/1/1953	BASIN 4
1022	20-81_20-82	20-81	20-82	258	8	VITRIFIED CLAY PIPE	SANITARY SEWER	Active	1/1/1986	BASIN 6
1023	20-82_20-42	20-82	20-42	58	6	VITRIFIED CLAY PIPE	SANITARY SEWER	Active	1/1/1986	BASIN 6
1024	20-83_20-81	20-83	20-81	139	8	VITRIFIED CLAY PIPE	SANITARY SEWER	Active	1/1/1986	BASIN 6
1025	20-84_20-68	20-84	20-68	35	6	VITRIFIED CLAY PIPE	SANITARY SEWER	Active	1/1/1944	BASIN 4
1026	20-85_20-65	20-85	20-65	178	8	VITRIFIED CLAY PIPE	SANITARY SEWER	Active	1/1/1980	BASIN 4
1027	20-86_20-75	20-86	20-75	165	6	VITRIFIED CLAY PIPE	SANITARY SEWER	Active	1/1/1990	BASIN 6
1028	20-88_20-32	20-88	20-32	249	6	VITRIFIED CLAY PIPE	SANITARY SEWER	Active	1/1/1978	BASIN 4
1029	20-89_21-7	20-89	21-7	317	6	VITRIFIED CLAY PIPE	SANITARY SEWER	Active	1/1/1967	BASIN 4
1030	20-9_20-7	20-9	20-7	389	12	VITRIFIED CLAY PIPE	SANITARY SEWER	Active	1/1/1953	BASIN 4
1031	20-90_20-86	20-90	20-86	244	8	VITRIFIED CLAY PIPE	SANITARY SEWER	Active		BASIN 6
1032	20-91_20-86	20-91	20-86	270	8	VITRIFIED CLAY PIPE	SANITARY SEWER	Active	1/1/1990	BASIN 6
1033	20-92_20-13	20-92	20-13	120	6	VITRIFIED CLAY PIPE	SANITARY SEWER	Active	1/1/1950	BASIN 6
1034	20-93_20-29	20-93	20-29	277	8	CAST IRON PIPE	SANITARY SEWER	Active	1/1/1994	BASIN 4
1035	20-94_20-19	20-94	20-19	201	8	VITRIFIED CLAY PIPE	SANITARY SEWER	Active	1/1/1952	BASIN 6
1036	20-95_20-94	20-95	20-94	172	8	DUCTILE IRON PIPE	SANITARY SEWER	Active	3/16/2007	BASIN 6
1037	20-96_21-122	20-96	21-122	278	18	VITRIFIED CLAY PIPE	SANITARY SEWER	Active		BASIN 5
1038	20-97_20-96	20-97	20-96	355	18	VITRIFIED CLAY PIPE	SANITARY SEWER	Active		BASIN 5
1039	20-98_20-97	20-98	20-97	266	18	VITRIFIED CLAY PIPE	SANITARY SEWER	Active		BASIN 5
1040	20-99_20-98	20-99	20-98	285	18	VITRIFIED CLAY PIPE	SANITARY SEWER	Active		BASIN 5
1041	2-1_2-14	2-1	2-14	155	8	VITRIFIED CLAY PIPE	SANITARY SEWER	Active	1/1/1957	BASIN 2
1042	2-10_2-11	2-10	2-11	155	8	VITRIFIED CLAY PIPE	SANITARY SEWER	Active	1/1/1956	BASIN 2
1043	2-11_2-33	2-11	2-33	223	8	VITRIFIED CLAY PIPE	SANITARY SEWER	Active	1/1/1956	BASIN 2
1044	21-100_21-99	21-100	21-99	38	27	VITRIFIED CLAY PIPE	SANITARY SEWER	Active	1/1/2010	BASIN 11
1045	21-101_21-100	21-101	21-100	223	24	VITRIFIED CLAY PIPE	SANITARY SEWER	Active	1/1/2010	BASIN 11
1046	21-102_21-101	21-102	21-101	319	24	VITRIFIED CLAY PIPE	SANITARY SEWER	Active	1/1/2010	BASIN 11
1047	21-103_21-102	21-103	21-102	319	24	VITRIFIED CLAY PIPE	SANITARY SEWER	Active	1/1/2010	BASIN 11
1048	21-104_21-103	21-104	21-103	301	24	VITRIFIED CLAY PIPE	SANITARY SEWER	Active	1/1/2010	BASIN 11
1049	21-105_21-104	21-105	21-104	95	24	VITRIFIED CLAY PIPE	SANITARY SEWER	Active	1/1/2010	BASIN 1
1050	21-106_21-105	21-106	21-105	48	24	VITRIFIED CLAY PIPE	SANITARY SEWER	Active	1/1/2010	BASIN 4
1051	21-107_21-106	21-107	21-106	129	24	VITRIFIED CLAY PIPE	SANITARY SEWER	Active	1/1/2010	BASIN 4
1052	21-108_21-107	21-108	21-107	300	24	VITRIFIED CLAY PIPE	SANITARY SEWER	Active	1/1/2010	BASIN 4
1053	21-109_21-108	21-109	21-108	307	24	VITRIFIED CLAY PIPE	SANITARY SEWER	Active	1/1/2010	BASIN 4
1055	21-10R_21-9	21-10R	21-9	82	6	VITRIFIED CLAY PIPE	SANITARY SEWER	Active	1/1/1948	BASIN 4
1056	21-11_21-12	21-11	21-12	130	8	VITRIFIED CLAY PIPE	SANITARY SEWER	Active	1/1/1944	BASIN 6
1057	21-110_21-109	21-110	21-109	195	24	VITRIFIED CLAY PIPE	SANITARY SEWER	Active	1/1/2010	BASIN 4
1058	21-111_21-110	21-111	21-110	195	24	VITRIFIED CLAY PIPE	SANITARY SEWER	Active	1/1/2010	BASIN 4
1059	21-112_21-111	21-112	21-111	195	24	VITRIFIED CLAY PIPE	SANITARY SEWER	Active	1/1/2010	BASIN 4
1060	21-113_21-112	21-113	21-112	259	24	VITRIFIED CLAY PIPE	SANITARY SEWER	Active	1/1/2010	BASIN 4
1061	21-114_21-113	21-114	21-113	274	24	VITRIFIED CLAY PIPE	SANITARY SEWER	Active	1/1/2010	BASIN 4
1062	21-115_21-112	21-115	21-112	70	8	VITRIFIED CLAY PIPE	SANITARY SEWER	Active	1/1/2010	BASIN 4
1063	21-116_21-109	21-116	21-109	77	8	VITRIFIED CLAY PIPE	SANITARY SEWER	Active	1/1/2010	BASIN 4
1064	21-117_21-29	21-117	21-29	307	8	VITRIFIED CLAY PIPE	SANITARY SEWER	Active	1/1/1961	BASIN 11
1065	21-118_21-77	21-118	21-77	284	8	VITRIFIED CLAY PIPE	SANITARY SEWER	Active	1/1/1947	BASIN 4
1066	21-119_21-76	21-119	21-76	132	6	VITRIFIED CLAY PIPE	SANITARY SEWER	Active	1/1/1947	BASIN 1
1067	21-12_21-19	21-12	21-19	447	8	VITRIFIED CLAY PIPE	SANITARY SEWER	Active	1/1/1944	BASIN 6
1068	21-120_21-114	21-120	21-114	96	24	VITRIFIED CLAY PIPE	SANITARY SEWER	Active		BASIN 5
1069	21-121_21-120	21-121	21-120	262	18	VITRIFIED CLAY PIPE	SANITARY SEWER	Active		BASIN 5
1070	21-122_21-121	21-122	21-121	300	18	VITRIFIED CLAY PIPE	SANITARY SEWER	Active		BASIN 5
1071	21-123_21-69	21-123	21-69	67	12	VITRIFIED CLAY PIPE	SANITARY SEWER	Active	1/1/1947	BASIN 1
1072	21-13_21-115	21-13	21-115	480	8	VITRIFIED CLAY PIPE	SANITARY SEWER	Active	1/1/1960	BASIN 4
1073	21-19_30-67	21-19	30-67	265	8	VITRIFIED CLAY PIPE	SANITARY SEWER	Active	1/1/1944	BASIN 6
1074	21-1R_21-2	21-1R	21-2	197	8	VITRIFIED CLAY PIPE	SANITARY SEWER	Active	1/1/1968	BASIN 4
1075	2-12_2-11	2-12	2-11	135	8	VITRIFIED CLAY PIPE	SANITARY SEWER	Active	1/1/1956	BASIN 2
1076	21-2_21-4	21-2	21-4	52	15	VITRIFIED CLAY PIPE	SANITARY SEWER	Active	1/1/1953	BASIN 4
1077	21-20_21-22	21-20	21-22	170	6	VITRIFIED CLAY PIPE	SANITARY SEWER	Active	1/1/1944	BASIN 11
1078	21-22_21-23	21-22	21-23	262	6	VITRIFIED CLAY PIPE	SANITARY SEWER	Active	1/1/1944	BASIN 11
1079	21-23_21-24	21-23	21-24	58	6	VITRIFIED CLAY PIPE	SANITARY SEWER	Active	1/1/1967	BASIN 11
1080	21-24_21-25	21-24	21-25	450	6	VITRIFIED CLAY PIPE	SANITARY SEWER	Active	1/1/1944	BASIN 11
1081	21-25_22-9	21-25	22-9	328	6	VITRIFIED CLAY PIPE	SANITARY SEWER	Active	1/1/1944	BASIN 11
1083	21-29_21-30	21-29	21-30	270	8	VITRIFIED CLAY PIPE	SANITARY SEWER	Active	1/1/1961	BASIN 11
1084	21-3_21-5	21-3	21-5	26	6	VITRIFIED CLAY PIPE	SANITARY SEWER	Active	1/1/1950	BASIN 4
1085	2-13_2-9	2-13	2-9	217	8	VITRIFIED CLAY PIPE	SANITARY SEWER	Active	1/1/1956	BASIN 2
1086	21-30_21-31	21-30	21-31	111	8	VITRIFIED CLAY PIPE	SANITARY SEWER	Active	1/1/1961	BASIN 11
1087	21-31_21-93	21-31	21-93	81	8	VITRIFIED CLAY PIPE	SANITARY SEWER	Active	1/1/1961	BASIN 11

1088	21-33_21-31	21-33	21-31	406	8	VITRIFIED CLAY PIPE	SANITARY SEWER	Active	1/1/1951	BASIN 11
1089	21-34_21-33	21-34	21-33	63	8	VITRIFIED CLAY PIPE	SANITARY SEWER	Active	1/1/1951	BASIN 11
1090	21-35_21-34	21-35	21-34	63	8	VITRIFIED CLAY PIPE	SANITARY SEWER	Active	1/1/1951	BASIN 11
1091	21-36_21-35	21-36	21-35	50	8	VITRIFIED CLAY PIPE	SANITARY SEWER	Active	1/1/1964	BASIN 11
1092	21-37_21-36	21-37	21-36	217	8	VITRIFIED CLAY PIPE	SANITARY SEWER	Active	1/1/1964	BASIN 11
1093	21-38_21-37	21-38	21-37	147	8	VITRIFIED CLAY PIPE	SANITARY SEWER	Active	1/1/1967	BASIN 11
1094	21-39_21-37	21-39	21-37	152	8	VITRIFIED CLAY PIPE	SANITARY SEWER	Active	1/1/1964	BASIN 11
1095	21-4_21-5	21-4	21-5	52	15	VITRIFIED CLAY PIPE	SANITARY SEWER	Active	1/1/1953	BASIN 4
1096	2-14_2-2	2-14	2-2	111	8		SANITARY SEWER	Active		BASIN 2
1097	21-40_22-5	21-40	22-5	422	8	VITRIFIED CLAY PIPE	SANITARY SEWER	Active	1/1/1955	BASIN 11
1098	21-41R_21-40	21-41R	21-40	301	8	VITRIFIED CLAY PIPE	SANITARY SEWER	Active	1/1/1955	BASIN 11
1099	21-42_21-40	21-42	21-40	283	8	VITRIFIED CLAY PIPE	SANITARY SEWER	Active	1/1/1955	BASIN 11
1100	21-43_21-42	21-43	21-42	122	8	VITRIFIED CLAY PIPE	SANITARY SEWER	Active	1/1/1956	BASIN 11
1101	21-44R_21-45	21-44R	21-45	86	6	VITRIFIED CLAY PIPE	SANITARY SEWER	Active	1/1/1948	BASIN 11
1102	21-45_22-4	21-45	22-4	389	6	VITRIFIED CLAY PIPE	SANITARY SEWER	Active	1/1/1948	BASIN 11
1103	21-46R_21-45	21-46R	21-45	86	6	VITRIFIED CLAY PIPE	SANITARY SEWER	Active	1/1/1948	BASIN 11
1104	21-47_22-3	21-47	22-3	444	6	VITRIFIED CLAY PIPE	SANITARY SEWER	Active	1/1/1944	BASIN 11
1105	21-48_21-47	21-48	21-47	193	6	VITRIFIED CLAY PIPE	SANITARY SEWER	Active	1/1/1944	BASIN 11
1106	21-49_21-48	21-49	21-48	51	6	VITRIFIED CLAY PIPE	SANITARY SEWER	Active	1/1/1953	BASIN 11
1107	2-14R_2-13	2-14R	2-13	468	8	VITRIFIED CLAY PIPE	SANITARY SEWER	Active	1/1/1957	BASIN 2
1108	21-5_21-75	21-5	21-75	559	18	VITRIFIED CLAY PIPE	SANITARY SEWER	Active	1/1/1953	BASIN 4
1109	2-15_3-70	2-15	3-70	421	8	VITRIFIED CLAY PIPE	SANITARY SEWER	Active	1/1/1961	BASIN 2
1110	21-50R_21-49	21-50R	21-49	245	8	VITRIFIED CLAY PIPE	SANITARY SEWER	Active	1/1/1953	BASIN 11
1111	21-51_21-49	21-51	21-49	676	6	VITRIFIED CLAY PIPE	SANITARY SEWER	Active	1/1/1944	BASIN 11
1112	21-52R_21-51	21-52R	21-51	265	8	VITRIFIED CLAY PIPE	SANITARY SEWER	Active	1/1/1953	BASIN 11
1113	21-53_22-19	21-53	22-19	301	6	VITRIFIED CLAY PIPE	SANITARY SEWER	Active	1/1/1947	BASIN 11
1114	21-54_21-53	21-54	21-53	302	6	VITRIFIED CLAY PIPE	SANITARY SEWER	Active	1/1/1947	BASIN 11
1115	21-55_21-54	21-55	21-54	301	6	VITRIFIED CLAY PIPE	SANITARY SEWER	Active	1/1/1947	BASIN 11
1116	21-56R_21-55	21-56R	21-55	215	6	VITRIFIED CLAY PIPE	SANITARY SEWER	Active	1/1/1947	BASIN 11
1117	21-59_22-2	21-59	22-2	302	6	VITRIFIED CLAY PIPE	SANITARY SEWER	Active	1/1/1947	BASIN 11
1118	2-16_3-73	2-16	3-73	475	8	VITRIFIED CLAY PIPE	SANITARY SEWER	Active	1/1/1956	BASIN 2
1119	21-60_21-59	21-60	21-59	300	6	VITRIFIED CLAY PIPE	SANITARY SEWER	Active	1/1/1947	BASIN 11
1120	21-61R_21-60	21-61R	21-60	320	6	VITRIFIED CLAY PIPE	SANITARY SEWER	Active	1/1/1947	BASIN 11
1121	21-62_21-98	21-62	21-98	280	27	VITRIFIED CLAY PIPE	SANITARY SEWER	Active	1/1/1965	BASIN 11
1122	21-62_22-1	21-62	22-1	389	21	VITRIFIED CLAY PIPE	SANITARY SEWER	Active	1/1/1953	BASIN 11
1123	21-63_21-62	21-63	21-62	6	21	VITRIFIED CLAY PIPE	SANITARY SEWER	Active	1/1/1965	BASIN 11
1124	21-64_21-62	21-64	21-62	26	27	VITRIFIED CLAY PIPE	SANITARY SEWER	Active	1/1/1965	BASIN 11
1125	21-65R_21-63	21-65R	21-63	210	8	VITRIFIED CLAY PIPE	SANITARY SEWER	Active	1/1/1953	BASIN 11
1126	21-66_21-63	21-66	21-63	128	21	VITRIFIED CLAY PIPE	SANITARY SEWER	Active	1/1/1953	BASIN 11
1127	21-67_21-64	21-67	21-64	120	27	VITRIFIED CLAY PIPE	SANITARY SEWER	Active	1/1/1965	BASIN 11
1128	21-68_21-66	21-68	21-66	18	12	VITRIFIED CLAY PIPE	SANITARY SEWER	Active	1/1/1953	BASIN 1
1129	21-69_21-68	21-69	21-68	400	12		SANITARY SEWER	Active	1/1/1947	BASIN 1
1130	2-17_2-16	2-17	2-16	190	8	VITRIFIED CLAY PIPE	SANITARY SEWER	Active	1/1/1956	BASIN 2
1131	21-7_21-8	21-7	21-8	80	6	VITRIFIED CLAY PIPE	SANITARY SEWER	Active	1/1/1944	BASIN 4
1132	21-70_21-86	21-70	21-86	128	18	VITRIFIED CLAY PIPE	SANITARY SEWER	Active	1/1/1953	BASIN 1
1133	21-71_21-70	21-71	21-70	128	18	VITRIFIED CLAY PIPE	SANITARY SEWER	Active	1/1/1953	BASIN 1
1134	21-72_21-70	21-72	21-70	319	8	VITRIFIED CLAY PIPE	SANITARY SEWER	Active	1/1/1955	BASIN 1
1135	21-73_21-71	21-73	21-71	365	8	VITRIFIED CLAY PIPE	SANITARY SEWER	Active	1/1/1955	BASIN 1
1136	21-74_21-90	21-74	21-90	314	6	VITRIFIED CLAY PIPE	SANITARY SEWER	Active	1/1/1947	BASIN 1
1137	21-75_13-45	21-75	13-45	335	18	VITRIFIED CLAY PIPE	SANITARY SEWER	Active	1/1/1953	BASIN 4
1138	21-76_21-74	21-76	21-74	282	8	VITRIFIED CLAY PIPE	SANITARY SEWER	Active	3/12/2014	BASIN 1
1139	21-77_21-75	21-77	21-75	345	8	VITRIFIED CLAY PIPE	SANITARY SEWER	Active	1/1/1947	BASIN 4
1140	21-8_21-95	21-8	21-95	64	8	HIGH DENSITY POLYETHYLENE	SANITARY SEWER	Active	9/21/2017	BASIN 4
1141	21-86_21-66	21-86	21-66	408	18	VITRIFIED CLAY PIPE	SANITARY SEWER	Active	1/1/1955	BASIN 1
1142	21-86R_21-63	21-86R	21-63	135	8	VITRIFIED CLAY PIPE	SANITARY SEWER	Active	1/1/1953	BASIN 11
1143	21-87R_21-38	21-87R	21-38	430	6	VITRIFIED CLAY PIPE	SANITARY SEWER	Active	1/1/1968	BASIN 11
1144	21-88_21-89	21-88	21-89	327	8	VITRIFIED CLAY PIPE	SANITARY SEWER	Active	1/1/1987	BASIN 4
1145	21-89_21-97	21-89	21-97	313	8	HIGH DENSITY POLYETHYLENE	SANITARY SEWER	Active	1/1/1947	BASIN 4
1146	2-18R_2-15	2-18R	2-15	466	8	VITRIFIED CLAY PIPE	SANITARY SEWER	Active	1/1/1961	BASIN 2
1147	21-9_21-7	21-9	21-7	255	8	VITRIFIED CLAY PIPE	SANITARY SEWER	Active	6/13/2013	BASIN 4
1148	2-19_2-17	2-19	2-17	307	8	VITRIFIED CLAY PIPE	SANITARY SEWER	Active	1/1/1956	BASIN 2
1149	21-90_13-48	21-90	13-48	6	12		SANITARY SEWER	Active	1/1/1953	BASIN 1
1150	21-90_21-71	21-90	21-71	233	18	VITRIFIED CLAY PIPE	SANITARY SEWER	Active	1/1/1953	BASIN 1
1151	21-91_22-128	21-91	22-128	246	12	VITRIFIED CLAY PIPE	SANITARY SEWER	Active	1/1/1982	BASIN 11
1152	21-92_21-91	21-92	21-91	170	12	VITRIFIED CLAY PIPE	SANITARY SEWER	Active	1/1/1982	BASIN 11
1153	21-92_22-8	22-8	21-92	178	12	VITRIFIED CLAY PIPE	SANITARY SEWER	Active	1/1/1982	BASIN 11
1154	21-93_21-94	21-93	21-94	265	8	VITRIFIED CLAY PIPE	SANITARY SEWER	Active	1/1/1961	BASIN 11
1155	21-94_22-129	21-94	22-129	123	8	VITRIFIED CLAY PIPE	SANITARY SEWER	Active	1/1/1961	BASIN 11
1156	21-95_21-116	21-95	21-116	491	6	VITRIFIED CLAY PIPE	SANITARY SEWER	Active	1/1/1944	BASIN 4
1157	21-96_21-106	21-96	21-106	80	8	VITRIFIED CLAY PIPE	SANITARY SEWER	Active	1/1/2010	BASIN 4
1158	21-97_21-96	21-97	21-96	310	8	HIGH DENSITY POLYETHYLENE	SANITARY SEWER	Active	5/1/2010	BASIN 4
1159	21-98_21-99	21-98	21-99	27	27	VITRIFIED CLAY PIPE	SANITARY SEWER	Active	1/1/2010	BASIN 11
1160	21-99_22-22	21-99	22-22	564	27	VITRIFIED CLAY PIPE	SANITARY SEWER	Active	1/1/1965	BASIN 11

1161	2-2_2-3	2-2	2-3	280	8	VITRIFIED CLAY PIPE	SANITARY SEWER	Active	1/1/1957	BASIN 2
1163	2-20_2-19	2-20	2-19	53	8	VITRIFIED CLAY PIPE	SANITARY SEWER	Active	1/1/1956	BASIN 2
1164	22-1_22-23	22-1	22-23	152	21	VITRIFIED CLAY PIPE	SANITARY SEWER	Active	1/1/1953	BASIN 11
1167	2-21_2-32	2-21	2-32	178	8	VITRIFIED CLAY PIPE	SANITARY SEWER	Active		BASIN 2
1168	22-10_22-11	22-10	22-11	187	15	VITRIFIED CLAY PIPE	SANITARY SEWER	Active	1/1/1966	BASIN 11
1169	22-100_22-101	22-100	22-101	218	8	VITRIFIED CLAY PIPE	SANITARY SEWER	Active	1/1/1956	BASIN 11
1170	22-101_22-102	22-101	22-102	137	8	VITRIFIED CLAY PIPE	SANITARY SEWER	Active	1/1/1956	BASIN 11
1171	22-102_23-1	22-102	23-1	478	8	VITRIFIED CLAY PIPE	SANITARY SEWER	Active	1/1/1946	BASIN 11
1172	22-103_22-104	22-103	22-104	200	6	VITRIFIED CLAY PIPE	SANITARY SEWER	Active	1/1/1949	BASIN 11
1173	22-104_23-2	22-104	23-2	302	6	VITRIFIED CLAY PIPE	SANITARY SEWER	Active	1/1/1949	BASIN 11
1174	22-105_22-107	22-105	22-107	131	24	VITRIFIED CLAY PIPE	SANITARY SEWER	Active	1/1/1965	BASIN 11
1175	22-106_23-15	22-106	23-15	490	30	VITRIFIED CLAY PIPE	SANITARY SEWER	Active	1/1/1965	BASIN 11
1176	22-107_22-108	22-107	22-108	150	24	VITRIFIED CLAY PIPE	SANITARY SEWER	Active	1/1/1953	BASIN 11
1177	22-108_23-17	22-108	23-17	372	24	VITRIFIED CLAY PIPE	SANITARY SEWER	Active	1/1/1953	BASIN 11
1178	22-109_23-3	22-109	23-3	328	6	VITRIFIED CLAY PIPE	SANITARY SEWER	Active	1/1/1951	BASIN 11
1179	22-11_22-12	22-11	22-12	187	15	VITRIFIED CLAY PIPE	SANITARY SEWER	Active	1/1/1966	BASIN 11
1180	22-110_23-3	22-110	23-3	318	15	VITRIFIED CLAY PIPE	SANITARY SEWER	Active	1/1/1947	BASIN 11
1181	22-111_22-83	22-111	22-83	171	6	VITRIFIED CLAY PIPE	SANITARY SEWER	Active	1/1/1947	BASIN 11
1182	22-112_22-111	22-112	22-111	425	8	HIGH DENSITY POLYETHYLENE	SANITARY SEWER	Active	5/27/2016	BASIN 11
1183	22-113_22-112	22-113	22-112	430	6	VITRIFIED CLAY PIPE	SANITARY SEWER	Active	1/1/1947	BASIN 11
1184	22-114_22-113	22-114	22-113	340	6	VITRIFIED CLAY PIPE	SANITARY SEWER	Active		BASIN 11
1185	22-114R_22-114	22-114R	22-114	52	6	VITRIFIED CLAY PIPE	SANITARY SEWER	Active		BASIN 11
1186	22-115R_22-116	22-115R	22-116	245	6	VITRIFIED CLAY PIPE	SANITARY SEWER	Active	1/1/1948	BASIN 10
1187	22-116_23-5	22-116	23-5	138	6	VITRIFIED CLAY PIPE	SANITARY SEWER	Active		BASIN 10
1188	22-117_22-116	22-117	22-116	370	6	VITRIFIED CLAY PIPE	SANITARY SEWER	Active	1/1/1948	BASIN 10
1189	22-118_22-117	22-118	22-117	390	6	VITRIFIED CLAY PIPE	SANITARY SEWER	Active	1/1/1948	BASIN 10
1190	22-119_22-120	22-119	22-120	179	8	HIGH DENSITY POLYETHYLENE	SANITARY SEWER	Active	11/19/2019	BASIN 11
1191	22-12_22-43	22-12	22-43	425	24	VITRIFIED CLAY PIPE	SANITARY SEWER	Active	1/1/1966	BASIN 11
1192	22-120_22-111	22-120	22-111	234	6	VITRIFIED CLAY PIPE	SANITARY SEWER	Active	1/1/1947	BASIN 11
1194	22-121R_22-120	22-121R	22-120	40	6	VITRIFIED CLAY PIPE	SANITARY SEWER	Active	1/1/1947	BASIN 11
1195	22-122_22-36	22-122	22-36	288	24	VITRIFIED CLAY PIPE	SANITARY SEWER	Active	1/1/1966	BASIN 11
1196	22-123_22-122	22-123	22-122	484	24	VITRIFIED CLAY PIPE	SANITARY SEWER	Active	1/1/1982	BASIN 11
1197	22-124_22-123	22-124	22-123	467	24	VITRIFIED CLAY PIPE	SANITARY SEWER	Active	1/1/1982	BASIN 11
1198	22-125_22-13	22-125	22-13	78	12	VITRIFIED CLAY PIPE	SANITARY SEWER	Active	1/1/1982	BASIN 11
1199	22-126_22-125	22-126	22-125	174	12	VITRIFIED CLAY PIPE	SANITARY SEWER	Active	1/1/1982	BASIN 11
1200	22-127_22-66	22-127	22-66	532	30	VITRIFIED CLAY PIPE	SANITARY SEWER	Active	1/1/1965	BASIN 11
1201	22-128_22-126	22-128	22-126	328	12	VITRIFIED CLAY PIPE	SANITARY SEWER	Active	1/1/1982	BASIN 11
1202	22-129_22-7	22-129	22-7	222	8	VITRIFIED CLAY PIPE	SANITARY SEWER	Active	1/1/1961	BASIN 11
1203	22-13_22-14	22-13	22-14	78	12	VITRIFIED CLAY PIPE	SANITARY SEWER	Active	1/1/1953	BASIN 11
1206	22-130_22-23	22-130	22-23	332	8	VITRIFIED CLAY PIPE	SANITARY SEWER	Active	1/1/1953	BASIN 11
1207	22-131_23-122	22-131	23-122	165	6	VITRIFIED CLAY PIPE	SANITARY SEWER	Active	1/1/1939	BASIN 10
1208	22-132_23-7	22-132	23-7	283	6	VITRIFIED CLAY PIPE	SANITARY SEWER	Active	1/1/1947	BASIN 10
1209	22-133_22-132	22-133	22-132	212	6	VITRIFIED CLAY PIPE	SANITARY SEWER	Active	1/1/1947	BASIN 10
1210	22-134R_22-133	22-134R	22-133	264	6	VITRIFIED CLAY PIPE	SANITARY SEWER	Active	1/1/1947	BASIN 10
1211	22-136_22-131	22-136	22-131	330	6	VITRIFIED CLAY PIPE	SANITARY SEWER	Active	1/1/1944	BASIN 10
1212	22-137_22-136	22-137	22-136	270	6	VITRIFIED CLAY PIPE	SANITARY SEWER	Active	1/1/1944	BASIN 10
1213	22-138_22-137	22-138	22-137	248	6	VITRIFIED CLAY PIPE	SANITARY SEWER	Active		BASIN 10
1214	22-139_22-138	22-139	22-138	208	6	VITRIFIED CLAY PIPE	SANITARY SEWER	Active	1/1/1965	BASIN 10
1215	22-14_22-15	22-14	22-15	439	12	VITRIFIED CLAY PIPE	SANITARY SEWER	Active	1/1/1953	BASIN 11
1216	22-140_22-129	22-140	22-129	192	8	DUCTILE IRON PIPE	SANITARY SEWER	Active	12/12/2006	BASIN 11
1217	22-141_22-23	22-141	22-23	184	8	VITRIFIED CLAY PIPE	SANITARY SEWER	Active	1/1/1953	BASIN 11
1218	22-15_22-16	22-15	22-16	235	12	VITRIFIED CLAY PIPE	SANITARY SEWER	Active	1/1/1953	BASIN 11
1219	22-16_22-33	22-16	22-33	336	12	CAST IRON PIPE	SANITARY SEWER	Active	1/1/1953	BASIN 11
1220	22-17_22-18	22-17	22-18	96	8	VITRIFIED CLAY PIPE	SANITARY SEWER	Active	1/1/1953	BASIN 11
1221	22-18_22-21	22-18	22-21	252	8	VITRIFIED CLAY PIPE	SANITARY SEWER	Active	1/1/1953	BASIN 11
1222	22-19_22-18	22-19	22-18	96	6	VITRIFIED CLAY PIPE	SANITARY SEWER	Active	1/1/1953	BASIN 11
1223	2-21R_2-32	2-21R	2-32	60	8	VITRIFIED CLAY PIPE	SANITARY SEWER	Active	1/1/1956	BASIN 2
1224	2-22_2-21	2-22	2-21	212	8	VITRIFIED CLAY PIPE	SANITARY SEWER	Active	1/1/1957	BASIN 2
1225	22-2_22-20	22-2	22-20	286	6	VITRIFIED CLAY PIPE	SANITARY SEWER	Active	1/1/1965	BASIN 11
1226	22-20_22-21	22-20	22-21	92	6		SANITARY SEWER	Active	1/1/1965	BASIN 11
1227	22-21_22-141	22-21	22-141	184	8	VITRIFIED CLAY PIPE	SANITARY SEWER	Active	1/1/1953	BASIN 11
1228	22-22_22-127	22-22	22-127	350	30	VITRIFIED CLAY PIPE	SANITARY SEWER	Active	1/1/1965	BASIN 11
1229	22-23_22-28	22-23	22-28	320	21	CAST IRON PIPE	TRUNK LINE	Active	1/1/1953	BASIN 11
1230	22-24_22-127	22-24	22-127	365	8	VITRIFIED CLAY PIPE	SANITARY SEWER	Active	1/1/1984	BASIN 11
1231	22-25R_22-26R	22-25R		75	6	VITRIFIED CLAY PIPE	SANITARY SEWER	Active	1/1/1962	BASIN 11
1232	22-26R_22-24	22-26R	22-24	75	6	VITRIFIED CLAY PIPE	SANITARY SEWER	Active	1/1/1962	BASIN 11
1233	22-28_22-29	22-28	22-29	340	24	VITRIFIED CLAY PIPE	SANITARY SEWER	Active	1/1/1965	BASIN 11
1234	22-28_22-63	22-28	22-63	340	15	VITRIFIED CLAY PIPE	TRUNK LINE	Active	1/1/1965	BASIN 11
1235	22-29_22-65	22-29	22-65	573	24	VITRIFIED CLAY PIPE	SANITARY SEWER	Active	1/1/1965	BASIN 11
1236	22-3_22-17	22-3	22-17	253	6	VITRIFIED CLAY PIPE	SANITARY SEWER	Active	1/1/1947	BASIN 11
1237	2-23_2-22	2-23	2-22	447	8	VITRIFIED CLAY PIPE	SANITARY SEWER	Active	1/1/1956	BASIN 2
1238	22-30R_22-31	22-30R	22-31	270	6	VITRIFIED CLAY PIPE	SANITARY SEWER	Active	1/1/1943	BASIN 11
1239	22-31_22-32	22-31	22-32	275	6	VITRIFIED CLAY PIPE	SANITARY SEWER	Active	1/1/1944	BASIN 11

1241	22-32_22-59	22-32	22-59	350	6	VITRIFIED CLAY PIPE	SANITARY SEWER	Active	1/1/1943	BASIN 11
1242	22-33_22-28	22-33	22-28	736	24	VITRIFIED CLAY PIPE	SANITARY SEWER	Active	1/1/1966	BASIN 11
1243	22-34_22-33	22-34	22-33	36	24	VITRIFIED CLAY PIPE	SANITARY SEWER	Active	1/1/1966	BASIN 11
1244	22-34_22-56	22-34	22-56	367	15	VITRIFIED CLAY PIPE	SANITARY SEWER	Active	9/1/1950	BASIN 11
1245	22-35_22-37	22-35	22-37	385	6	VITRIFIED CLAY PIPE	SANITARY SEWER	Active	1/1/1966	BASIN 11
1246	22-36_22-34	22-36	22-34	476	24	VITRIFIED CLAY PIPE	SANITARY SEWER	Active	1/1/1966	BASIN 11
1247	22-37_22-36	22-37	22-36	160	6	VITRIFIED CLAY PIPE	SANITARY SEWER	Active	1/1/1966	BASIN 11
1248	22-38_22-37	22-38	22-37	160	6	VITRIFIED CLAY PIPE	SANITARY SEWER	Active	1/1/1966	BASIN 11
1249	22-4_22-16	22-4	22-16	184	6	VITRIFIED CLAY PIPE	SANITARY SEWER	Active	1/1/1948	BASIN 11
1250	22-40_22-122	22-40	22-122	12	8	VITRIFIED CLAY PIPE	SANITARY SEWER	Active	1/1/1966	BASIN 11
1251	22-43_22-124	22-43	22-124	58	24	VITRIFIED CLAY PIPE	SANITARY SEWER	Active	1/1/1982	BASIN 11
1252	22-45_22-40	22-45	22-40	86	8	VITRIFIED CLAY PIPE	SANITARY SEWER	Active	1/1/1955	BASIN 11
1253	22-46_22-47	22-46	22-47	276	8	DUCTILE IRON PIPE	SANITARY SEWER	Active	1/1/1948	BASIN 11
1254	22-47_22-48	22-47	22-48	287	8	VITRIFIED CLAY PIPE	SANITARY SEWER	Active	1/1/1955	BASIN 11
1255	22-48_22-50	22-48	22-50	242	8	VITRIFIED CLAY PIPE	SANITARY SEWER	Active	1/1/1955	BASIN 11
1256	22-49R_22-75	22-49R	22-75	85	6	VITRIFIED CLAY PIPE	SANITARY SEWER	Active	1/1/1948	BASIN 11
1257	22-5_22-15	22-5	22-15	310	8	VITRIFIED CLAY PIPE	SANITARY SEWER	Active	1/1/1953	BASIN 11
1258	22-50_22-51	22-50	22-51	332	8	VITRIFIED CLAY PIPE	SANITARY SEWER	Active	1/1/1955	BASIN 11
1259	22-51_22-52	22-51	22-52	301	8	VITRIFIED CLAY PIPE	SANITARY SEWER	Active	1/1/1955	BASIN 11
1260	22-52_22-56	22-52	22-56	99	6	VITRIFIED CLAY PIPE	SANITARY SEWER	Active	1/1/1947	BASIN 11
1261	22-53_22-52	22-53	22-52	120	6	VITRIFIED CLAY PIPE	SANITARY SEWER	Active	1/1/1947	BASIN 11
1262	22-54_22-53	22-54	22-53	245	6	VITRIFIED CLAY PIPE	SANITARY SEWER	Active	1/1/1947	BASIN 11
1263	22-55_22-54	22-55	22-54	315	8	HIGH DENSITY POLYETHYLENE	SANITARY SEWER	Active	9/25/2017	BASIN 11
1265	22-56_22-57	22-56	22-57	125	15	VITRIFIED CLAY PIPE	SANITARY SEWER	Active	1/1/1950	BASIN 11
1266	22-57_22-86	22-57	22-86	315	18	VITRIFIED CLAY PIPE	SANITARY SEWER	Active	1/1/1950	BASIN 11
1267	22-58_22-57	22-58	22-57	125	15	VITRIFIED CLAY PIPE	SANITARY SEWER	Active	1/1/1948	BASIN 11
1268	22-59_22-58	22-59	22-58	140	6	VITRIFIED CLAY PIPE	SANITARY SEWER	Active	1/1/1943	BASIN 11
1269	2-26_9-124	2-26	9-124	284	8	VITRIFIED CLAY PIPE	SANITARY SEWER	Active	1/1/1957	BASIN 2
1270	22-60_22-94	22-60	22-94	180	6	VITRIFIED CLAY PIPE	SANITARY SEWER	Active	1/1/1943	BASIN 11
1271	22-61_22-60	22-61	22-60	135	6	VITRIFIED CLAY PIPE	SANITARY SEWER	Active	1/1/1944	BASIN 11
1272	22-62R_22-63	22-62R	22-63	180	6	VITRIFIED CLAY PIPE	SANITARY SEWER	Active	1/1/1966	BASIN 11
1273	22-63_22-64	22-63	22-64	243	15	VITRIFIED CLAY PIPE	SANITARY SEWER	Active	1/1/1965	BASIN 11
1274	22-64_22-65	22-64	22-65	10	15	VITRIFIED CLAY PIPE	OVERFLOW	Active	1/1/1965	BASIN 11
1275	22-64_22-94	22-64	22-94	148	15	VITRIFIED CLAY PIPE	SANITARY SEWER	Active		BASIN 11
1276	22-65_22-92	22-65	22-92	367	24	VITRIFIED CLAY PIPE	SANITARY SEWER	Active	1/1/1965	BASIN 11
1277	22-66_22-90	22-66	22-90	456	30	VITRIFIED CLAY PIPE	SANITARY SEWER	Active	1/1/1965	BASIN 11
1278	22-67_22-91	22-67	22-91	367	6	VITRIFIED CLAY PIPE	SANITARY SEWER	Active	1/1/1965	BASIN 11
1279	22-68_22-89	22-68	22-89	373	6	VITRIFIED CLAY PIPE	SANITARY SEWER	Active	1/1/1942	BASIN 11
1280	22-69R_22-88	22-69R	22-88	307	6	VITRIFIED CLAY PIPE	SANITARY SEWER	Active		BASIN 11
1281	22-6R_22-7	22-6R	22-7	287	8	VITRIFIED CLAY PIPE	SANITARY SEWER	Active	1/1/1951	BASIN 11
1282	22-7_22-14	22-7	22-14	162	8	VITRIFIED CLAY PIPE	SANITARY SEWER	Active	1/1/1961	BASIN 11
1283	2-27_2-26	2-27	2-26	279	8	VITRIFIED CLAY PIPE	SANITARY SEWER	Active	1/1/1957	BASIN 2
1284	22-70_22-82	22-70	22-82	117	6	VITRIFIED CLAY PIPE	SANITARY SEWER	Active	1/1/1947	BASIN 11
1285	22-71R_22-72	22-71R	22-72	115	6	VITRIFIED CLAY PIPE	SANITARY SEWER	Active	10/30/1947	BASIN 11
1286	22-72_22-70	22-72	22-70	120	6	VITRIFIED CLAY PIPE	SANITARY SEWER	Active	1/1/1947	BASIN 11
1287	22-73_22-72	22-73	22-72	415	6	VITRIFIED CLAY PIPE	SANITARY SEWER	Active	1/1/1947	BASIN 11
1288	22-74_22-73	22-74	22-73	109	6	VITRIFIED CLAY PIPE	SANITARY SEWER	Active	1/1/1947	BASIN 11
1290	22-75_22-74	22-75	22-74	141	8	HIGH DENSITY POLYETHYLENE	SANITARY SEWER	Active	5/13/2016	BASIN 11
1291	22-76_22-75	22-76	22-75	85	6	VITRIFIED CLAY PIPE	SANITARY SEWER	Active	1/1/1947	BASIN 11
1292	22-77_22-76	22-77	22-76	435	6	VITRIFIED CLAY PIPE	SANITARY SEWER	Active	1/1/1947	BASIN 11
1293	22-78R_22-77	22-78R	22-77	276	6	VITRIFIED CLAY PIPE	SANITARY SEWER	Active		BASIN 11
1294	22-79_22-80	22-79	22-80	330	6	VITRIFIED CLAY PIPE	SANITARY SEWER	Active	1/1/1947	BASIN 11
1295	22-8_22-12	22-8	22-12	295	21	VITRIFIED CLAY PIPE	SANITARY SEWER	Active	1/1/1966	BASIN 11
1296	22-80_22-81	22-80	22-81	425	6	VITRIFIED CLAY PIPE	SANITARY SEWER	Active	1/1/1947	BASIN 11
1297	22-81_22-82	22-81	22-82	420	8	HIGH DENSITY POLYETHYLENE	SANITARY SEWER	Active	5/23/2016	BASIN 11
1298	22-82_22-83	22-82	22-83	117	6	VITRIFIED CLAY PIPE	SANITARY SEWER	Active	1/1/1947	BASIN 11
1299	22-83_22-84	22-83	22-84	60	6	VITRIFIED CLAY PIPE	SANITARY SEWER	Active	1/1/1947	BASIN 11
1300	22-84_22-85	22-84	22-85	112	6	VITRIFIED CLAY PIPE	SANITARY SEWER	Active	1/1/1947	BASIN 11
1301	22-85_22-86	22-85	22-86	120	6	VITRIFIED CLAY PIPE	SANITARY SEWER	Active	1/1/1947	BASIN 11
1304	22-86_22-87	22-86	22-87	120	18	VITRIFIED CLAY PIPE	SANITARY SEWER	Active	1/1/1950	BASIN 11
1305	22-87_22-110	22-87	22-110	114	18	VITRIFIED CLAY PIPE	SANITARY SEWER	Active	1/1/1950	BASIN 11
1306	22-88_22-87	22-88	22-87	20	6	VITRIFIED CLAY PIPE	SANITARY SEWER	Active	1/1/1942	BASIN 11
1307	22-89_22-88	22-89	22-88	179	6	VITRIFIED CLAY PIPE	SANITARY SEWER	Active	1/1/1942	BASIN 11
1309	2-28R_2-27	2-28R	2-27	175	8	VITRIFIED CLAY PIPE	SANITARY SEWER	Active	1/1/1957	BASIN 2
1310	22-9_22-10	22-9	22-10	128	15	VITRIFIED CLAY PIPE	SANITARY SEWER	Active	1/1/1982	BASIN 11
1311	2-29_2-27	2-29	2-27	69	8	VITRIFIED CLAY PIPE	SANITARY SEWER	Active	1/1/1957	BASIN 2
1312	22-90_22-106	22-90	22-106	205	30	VITRIFIED CLAY PIPE	SANITARY SEWER	Active	1/1/1965	BASIN 11
1313	22-91_22-109	22-91	22-109	304	6	VITRIFIED CLAY PIPE	SANITARY SEWER	Active	1/1/1965	BASIN 11
1314	22-92_22-105	22-92	22-105	144	24	VITRIFIED CLAY PIPE	SANITARY SEWER	Active	1/1/1965	BASIN 11
1315	22-93R_22-92	22-93R	22-92	111	6	VITRIFIED CLAY PIPE	SANITARY SEWER	Active	1/1/1942	BASIN 11
1316	22-94_22-58	22-94	22-58	310	15	VITRIFIED CLAY PIPE	SANITARY SEWER	Active		BASIN 11
1317	22-95_22-103	22-95	22-103	107	6	VITRIFIED CLAY PIPE	SANITARY SEWER	Active	1/1/1949	BASIN 11
1318	22-96R_22-97	22-96R	22-97	145	8	VITRIFIED CLAY PIPE	SANITARY SEWER	Active	1/1/1956	BASIN 11

1319	22-97_22-101	22-97	22-101	145	8	VITRIFIED CLAY PIPE	SANITARY SEWER	Active	1/1/1956	BASIN 11
1320	22-98_14-41	22-98	14-41	250	8	VITRIFIED CLAY PIPE	SANITARY SEWER	Active	1/1/1956	BASIN 11
1321	22-99R_22-100	22-99R	22-100	231	8	VITRIFIED CLAY PIPE	SANITARY SEWER	Active	1/1/1956	BASIN 11
1322	2-3_2-4	2-3	2-4	125	8	VITRIFIED CLAY PIPE	SANITARY SEWER	Active	1/1/1956	BASIN 2
1323	23-1_23-18	23-1	23-18	233	8	VITRIFIED CLAY PIPE	SANITARY SEWER	Active	1/1/1945	BASIN 11
1324	23-10_23-9	23-10	23-9	260	6	VITRIFIED CLAY PIPE	SANITARY SEWER	Active	1/1/1948	BASIN 10
1325	23-100_23-99	23-100	23-99	427	6	VITRIFIED CLAY PIPE	SANITARY SEWER	Active	1/1/1944	BASIN 11
1326	23-101_23-105	23-101	23-105	254	8	VITRIFIED CLAY PIPE	SANITARY SEWER	Active	1/1/1944	BASIN 11
1327	23-102R_23-101	23-102R	23-101	155	6	VITRIFIED CLAY PIPE	SANITARY SEWER	Active	1/1/1944	BASIN 11
1328	23-103_23-104	23-103	23-104	115	8	VITRIFIED CLAY PIPE	SANITARY SEWER	Active	1/1/1944	BASIN 11
1329	23-104_23-105	23-104	23-105	336	8	VITRIFIED CLAY PIPE	SANITARY SEWER	Active	1/1/1944	BASIN 11
1330	23-105_23-115	23-105	23-115	115	8	VITRIFIED CLAY PIPE	SANITARY SEWER	Active	1/1/1944	BASIN 11
1331	23-106R_23-115	23-106R	23-115	115	6	VITRIFIED CLAY PIPE	SANITARY SEWER	Active	1/1/1944	BASIN 11
1332	23-107_23-109	23-107	23-109	338	6	VITRIFIED CLAY PIPE	SANITARY SEWER	Active	1/1/1944	BASIN 11
1333	23-108R_23-109	23-108R	23-109	223	6	VITRIFIED CLAY PIPE	SANITARY SEWER	Active	1/1/1944	BASIN 11
1334	23-109_23-110	23-109	23-110	328	6	VITRIFIED CLAY PIPE	SANITARY SEWER	Active	1/1/1944	BASIN 11
1335	23-11_23-10	23-11	23-10	529	6	VITRIFIED CLAY PIPE	SANITARY SEWER	Active	1/1/1948	BASIN 10
1336	23-110_23-111	23-110	23-111	178	8	VITRIFIED CLAY PIPE	SANITARY SEWER	Active	1/1/1944	BASIN 11
1337	23-111_24-5	23-111	24-5	215	8	VITRIFIED CLAY PIPE	SANITARY SEWER	Active	1/1/1944	BASIN 11
1338	23-112R_23-111	23-112R	23-111	178	6	VITRIFIED CLAY PIPE	SANITARY SEWER	Active	1/1/1944	BASIN 11
1339	23-113_23-35	23-113	23-35	262	6	VITRIFIED CLAY PIPE	SANITARY SEWER	Active	1/1/1947	BASIN 11
1340	23-114_23-53	23-114	23-53	379	8	VITRIFIED CLAY PIPE	SANITARY SEWER	Active	1/1/1944	BASIN 10
1341	23-115R_23-103	23-115R	23-103	290	6	VITRIFIED CLAY PIPE	SANITARY SEWER	Active	1/1/1944	BASIN 11
1342	23-115Y_24-9	23-115	24-9	300	8	VITRIFIED CLAY PIPE	SANITARY SEWER	Active	1/1/1944	BASIN 11
1343	23-117_23-114	23-117	23-114	593	6	VITRIFIED CLAY PIPE	SANITARY SEWER	Active	1/1/1944	BASIN 10
1344	23-118_23-117	23-118	23-117	110	6	VITRIFIED CLAY PIPE	SANITARY SEWER	Active	1/1/1947	BASIN 10
1345	23-119_23-118	23-119	23-118	250	6	VITRIFIED CLAY PIPE	SANITARY SEWER	Active	1/1/1947	BASIN 10
1346	23-120R_23-119	23-120R	23-119	46	6	VITRIFIED CLAY PIPE	SANITARY SEWER	Active	1/1/1947	BASIN 10
1347	23-121_23-122	23-121	23-122	35	8	VITRIFIED CLAY PIPE	SANITARY SEWER	Active		BASIN 10
1348	23-122_23-7	23-122	23-7	126	8	VITRIFIED CLAY PIPE	SANITARY SEWER	Active		BASIN 10
1349	23-123_23-38	23-123	23-38	181	6	VITRIFIED CLAY PIPE	SANITARY SEWER	Active	1/1/1947	BASIN 11
1350	23-124_23-88	23-124	23-88	127	8	VITRIFIED CLAY PIPE	SANITARY SEWER	Active	1/1/1953	BASIN 11
1351	23-125_23-121	23-125	23-121	180	8	VITRIFIED CLAY PIPE	SANITARY SEWER	Active		BASIN 10
1352	23-128_23-125	23-128	23-125	150	8	VARIABLE MATERIAL	SANITARY SEWER	Active		BASIN 10
1353	23-129_23-130	23-129	23-130	139	8	VITRIFIED CLAY PIPE	SANITARY SEWER	Active		BASIN 11
1354	23-12R_23-14	23-12R	23-14	152	6	VITRIFIED CLAY PIPE	SANITARY SEWER	Active	1/1/1947	BASIN 11
1355	23-130_23-101	23-130	23-101	337	8	VITRIFIED CLAY PIPE	SANITARY SEWER	Active		BASIN 11
1356	23-130P_23-117	23-130P	23-117	353	6	VITRIFIED CLAY PIPE	SANITARY SEWER	Active	1/1/1955	BASIN 10
1357	23-13R_23-14	23-13R	23-14	31	6	VITRIFIED CLAY PIPE	SANITARY SEWER	Active	1/1/1947	BASIN 11
1358	23-14_23-22	23-14	23-22	227	6	VITRIFIED CLAY PIPE	SANITARY SEWER	Active	1/1/1947	BASIN 11
1359	23-15_23-36	23-15	23-36	393	33	VITRIFIED CLAY PIPE	SANITARY SEWER	Active	1/1/1965	BASIN 11
1360	23-16_23-46	23-16	23-46	583	15	VITRIFIED CLAY PIPE	SANITARY SEWER	Active	1/1/1944	BASIN 11
1361	23-17_23-45	23-17	23-45	579	24	VITRIFIED CLAY PIPE	TRUNK LINE	Active	1/1/1953	BASIN 11
1362	23-18_23-19	23-18	23-19	63	8	VITRIFIED CLAY PIPE	SANITARY SEWER	Active	1/1/1945	BASIN 11
1363	23-19_23-37	23-19	23-37	153	8	VITRIFIED CLAY PIPE	SANITARY SEWER	Active	1/1/1945	BASIN 11
1364	2-31R_2-29	2-31R	2-29	134	8	VITRIFIED CLAY PIPE	SANITARY SEWER	Active	1/1/1957	BASIN 2
1365	2-32_2-20	2-32	2-20	55	8	VITRIFIED CLAY PIPE	SANITARY SEWER	Active	1/1/1956	BASIN 2
1366	23-2_23-20	23-2	23-20	320	6	VITRIFIED CLAY PIPE	SANITARY SEWER	Active	1/1/1946	BASIN 11
1367	23-20_23-42	23-20	23-42	345	8	HIGH DENSITY POLYETHYLENE	SANITARY SEWER	Active	5/10/2016	BASIN 11
1368	23-21R_23-44R	23-21R	23-44R	383	6	VITRIFIED CLAY PIPE	SANITARY SEWER	Active		BASIN 11
1369	23-22_23-113	23-22	23-113	151	6	VITRIFIED CLAY PIPE	SANITARY SEWER	Active	1/1/1947	BASIN 11
1370	23-23R_23-22	23-23R	23-22	151	6	VITRIFIED CLAY PIPE	SANITARY SEWER	Active	1/1/1947	BASIN 11
1371	23-24R_23-25	23-24R	23-25	250	6	VITRIFIED CLAY PIPE	SANITARY SEWER	Active	1/1/1948	BASIN 10
1372	23-25_23-26	23-25	23-26	260	6	VITRIFIED CLAY PIPE	SANITARY SEWER	Active	1/1/1948	BASIN 10
1373	23-26_23-27	23-26	23-27	263	8	HIGH DENSITY POLYETHYLENE	SANITARY SEWER	Active	5/12/2016	BASIN 10
1374	23-27_23-29	23-27	23-29	61	8	VITRIFIED CLAY PIPE	SANITARY SEWER	Active	1/1/1955	BASIN 10
1375	23-28R_23-29	23-28R	23-29	267	6	VITRIFIED CLAY PIPE	SANITARY SEWER	Active	1/1/1948	BASIN 10
1376	23-29_23-33	23-29	23-33	185	8	VITRIFIED CLAY PIPE	SANITARY SEWER	Active	1/1/1955	BASIN 10
1377	2-32S_3-74	2-32S	3-74	162	8	VITRIFIED CLAY PIPE	SANITARY SEWER	Active	1/1/1956	BASIN 2
1378	23-3_23-16	23-3	23-16	265	15	VITRIFIED CLAY PIPE	SANITARY SEWER	Active	1/1/1944	BASIN 11
1379	2-33_3-74	2-33	3-74	136	8	VITRIFIED CLAY PIPE	SANITARY SEWER	Active	1/1/1956	BASIN 2
1380	23-30R_23-32	23-30R	23-32	150	8	VITRIFIED CLAY PIPE	SANITARY SEWER	Active	1/1/1948	BASIN 10
1381	23-31R_23-32	23-31R	23-32	56	6	VITRIFIED CLAY PIPE	SANITARY SEWER	Active	1/1/1948	BASIN 10
1382	23-32_23-54	23-32	23-54	164	8	VITRIFIED CLAY PIPE	SANITARY SEWER	Active	1/1/1948	BASIN 10
1383	23-33_23-57	23-33	23-57	132	8	VITRIFIED CLAY PIPE	SANITARY SEWER	Active	1/1/1955	BASIN 10
1384	23-34_23-33	23-34	23-33	317	8	HIGH DENSITY POLYETHYLENE	SANITARY SEWER	Active	9/26/2017	BASIN 10
1385	23-35_23-49	23-35	23-49	299	6	VITRIFIED CLAY PIPE	SANITARY SEWER	Active	1/1/1947	BASIN 11
1386	23-36_23-48	23-36	23-48	353	33	VITRIFIED CLAY PIPE	SANITARY SEWER	Active	1/1/1965	BASIN 11
1387	23-37_23-41	23-37	23-41	83	8	VITRIFIED CLAY PIPE	SANITARY SEWER	Active		BASIN 11
1388	23-38_23-41	23-38	23-41	224	6	VCP + CIP + VCP	SANITARY SEWER	Active	1/1/1947	BASIN 11
1389	23-39_23-38	23-39	23-38	142	8	VITRIFIED CLAY PIPE	SANITARY SEWER	Active	1/1/1951	BASIN 11
1390	23-40_23-39	23-40	23-39	140	8	VITRIFIED CLAY PIPE	SANITARY SEWER	Active	1/1/1962	BASIN 11
1391	23-41_23-42	23-41	23-42	193	8	VITRIFIED CLAY PIPE	SANITARY SEWER	Active	1/1/1945	BASIN 11

1392	23-42_23-43	23-42	23-43	179	8	VCP + CIP + VCP	SANITARY SEWER	Active	1/1/1945	BASIN 11
1393	23-43_23-69	23-43	23-69	244	8	VITRIFIED CLAY PIPE	SANITARY SEWER	Active	1/1/1947	BASIN 11
1394	23-44R_23-43	23-44R	23-43	179	8	VITRIFIED CLAY PIPE	SANITARY SEWER	Active		BASIN 11
1396	23-45_23-47	23-45	23-47	306	24	VITRIFIED CLAY PIPE	SANITARY SEWER	Active	1/1/1943	BASIN 11
1397	23-46_23-47	23-46	23-47	5	15	VITRIFIED CLAY PIPE	OVERFLOW	Active		BASIN 11
1398	23-46_23-66	23-46	23-66	253	15	VITRIFIED CLAY PIPE	SANITARY SEWER	Active	1/1/1944	BASIN 11
1399	23-47_23-48	23-47	23-48	10	12	VITRIFIED CLAY PIPE	OVERFLOW	Active		BASIN 11
1400	23-47_23-65	23-47	23-65	252	24	VITRIFIED CLAY PIPE	SANITARY SEWER	Active	1/1/1953	BASIN 11
1401	23-48_23-64	23-48	23-64	253	33	VITRIFIED CLAY PIPE	SANITARY SEWER	Active	1/1/1965	BASIN 11
1402	23-49_23-48	23-49	23-48	240	12	VITRIFIED CLAY PIPE	SANITARY SEWER	Active	1/1/1953	BASIN 11
1403	23-5_23-6	23-5	23-6	25	8	VITRIFIED CLAY PIPE	SANITARY SEWER	Active	1/1/1955	BASIN 10
1404	23-50_23-49	23-50	23-49	356	12	VITRIFIED CLAY PIPE	SANITARY SEWER	Active	1/1/1953	BASIN 11
1406	23-51_23-50	23-51	23-50	279	12	VITRIFIED CLAY PIPE	SANITARY SEWER	Active	1/1/1953	BASIN 10
1407	23-52_23-51	23-52	23-51	375	12	VITRIFIED CLAY PIPE	SANITARY SEWER	Active	1/1/1953	BASIN 10
1408	23-53_23-52	23-53	23-52	141	12	VITRIFIED CLAY PIPE	SANITARY SEWER	Active	1/1/1953	BASIN 10
1409	23-53P_23-58	23-53P	23-58	101	8	VITRIFIED CLAY PIPE	SANITARY SEWER	Active	1/1/1944	BASIN 11
1410	23-54_23-53	23-54	23-53	201	8	VITRIFIED CLAY PIPE	SANITARY SEWER	Active	1/1/1948	BASIN 10
1411	23-56_23-51	23-56	23-51	254	8	VITRIFIED CLAY PIPE	SANITARY SEWER	Active	1/1/1955	BASIN 10
1412	23-57_23-56	23-57	23-56	273	8	VITRIFIED CLAY PIPE	SANITARY SEWER	Active	1/1/1955	BASIN 10
1413	23-58_23-130	23-58	23-130	56	8	VITRIFIED CLAY PIPE	SANITARY SEWER	Active		BASIN 7
1414	23-59R_23-58	23-59R	23-58	370	6	VITRIFIED CLAY PIPE	SANITARY SEWER	Active	1/1/1963	BASIN 11
1415	23-6_23-9	23-6	23-9	96	8	VITRIFIED CLAY PIPE	SANITARY SEWER	Active	1/1/1955	BASIN 10
1416	23-60R_23-99	23-60R	23-99	268	6	VITRIFIED CLAY PIPE	SANITARY SEWER	Active	1/1/1944	BASIN 11
1417	23-61_23-82	23-61	23-82	454	6	VITRIFIED CLAY PIPE	SANITARY SEWER	Active	1/1/1947	BASIN 11
1418	23-62R_23-80	23-62R	23-80	290	6	VITRIFIED CLAY PIPE	SANITARY SEWER	Active	1/1/1947	BASIN 11
1419	23-63_23-65	23-63	23-65	253	6	VITRIFIED CLAY PIPE	SANITARY SEWER	Active	1/1/1947	BASIN 11
1420	23-64_23-85	23-64	23-85	325	33	VITRIFIED CLAY PIPE	SANITARY SEWER	Active	1/1/1965	BASIN 11
1421	23-65_23-84	23-65	23-84	319	24	VITRIFIED CLAY PIPE	SANITARY SEWER	Active	1/1/1953	BASIN 11
1422	23-66_23-79	23-66	23-79	156	15	VITRIFIED CLAY PIPE	SANITARY SEWER	Active	1/1/1944	BASIN 11
1423	23-66A_23-66	23-66A	23-66	150	6	VITRIFIED CLAY PIPE	SANITARY SEWER	Active	1/1/1947	BASIN 11
1425	23-67R_23-66A	23-67R	23-66A	150	6	VITRIFIED CLAY PIPE	SANITARY SEWER	Active	1/1/1947	BASIN 11
1426	23-68R_23-66A	23-68R	23-66A	97	6	VITRIFIED CLAY PIPE	SANITARY SEWER	Active	1/1/1947	BASIN 11
1427	23-69_23-76	23-69	23-76	158	8	VITRIFIED CLAY PIPE	SANITARY SEWER	Active	1/1/1947	BASIN 11
1428	23-7_23-5	23-7	23-5	386	8	VITRIFIED CLAY PIPE	SANITARY SEWER	Active	1/1/1955	BASIN 10
1429	23-70_23-40	23-70	23-40	278	8	VITRIFIED CLAY PIPE	SANITARY SEWER	Active	1/1/1962	BASIN 11
1430	23-71_15-6	23-71	15-6	303	8	VITRIFIED CLAY PIPE	SANITARY SEWER	Active	1/1/1962	BASIN 11
1431	23-72_23-70	23-72	23-70	222	8	VITRIFIED CLAY PIPE	SANITARY SEWER	Active	1/1/1962	BASIN 11
1432	23-73_23-71	23-73	23-71	285	8	VITRIFIED CLAY PIPE	SANITARY SEWER	Active	1/1/1962	BASIN 11
1433	23-74_23-73	23-74	23-73	140	8	VITRIFIED CLAY PIPE	SANITARY SEWER	Active	1/1/1962	BASIN 11
1434	23-75R_23-72	23-75R	23-72	145	8	VITRIFIED CLAY PIPE	SANITARY SEWER	Active	1/1/1962	BASIN 11
1435	23-76_23-77	23-76	23-77	215	8	VITRIFIED CLAY PIPE	SANITARY SEWER	Active	1/1/1947	BASIN 11
1436	23-77_23-124	23-77	23-124	127	8	VITRIFIED CLAY PIPE	SANITARY SEWER	Active	1/1/1947	BASIN 11
1437	23-78R_23-77	23-78R	23-77	130	6	VITRIFIED CLAY PIPE	SANITARY SEWER	Active	1/1/1947	BASIN 11
1438	23-79_23-91	23-79	23-91	328	15	VITRIFIED CLAY PIPE	TRUNK LINE	Active	1/1/1947	BASIN 11
1439	23-8_23-6	23-8	23-6	339	6	VITRIFIED CLAY PIPE	SANITARY SEWER	Active	1/1/1948	BASIN 10
1440	23-80_23-63	23-80	23-63	277	6	VITRIFIED CLAY PIPE	SANITARY SEWER	Active	1/1/1947	BASIN 11
1441	23-81R_23-80	23-81R	23-80	73	6	VITRIFIED CLAY PIPE	SANITARY SEWER	Active	1/1/1947	BASIN 11
1442	23-82_23-80	23-82	23-80	138	6	VITRIFIED CLAY PIPE	SANITARY SEWER	Active	1/1/1947	BASIN 11
1443	23-83R_23-82	23-83R	23-82	68	6	VITRIFIED CLAY PIPE	SANITARY SEWER	Active	1/1/1947	BASIN 11
1444	23-84_23-87	23-84	23-87	56	24	VITRIFIED CLAY PIPE	SANITARY SEWER	Active	1/1/1953	BASIN 11
1445	23-85_23-86	23-85	23-86	42	33	VITRIFIED CLAY PIPE	SANITARY SEWER	Active	1/1/1965	BASIN 11
1446	23-86_23-92	23-86	23-92	123	33	VITRIFIED CLAY PIPE	SANITARY SEWER	Active	1/1/1965	BASIN 11
1447	23-87_23-90	23-87	23-90	127	24	VITRIFIED CLAY PIPE	SANITARY SEWER	Active	1/1/1953	BASIN 11
1448	23-88_23-89	23-88	23-89	105	8	VITRIFIED CLAY PIPE	SANITARY SEWER	Active	1/1/1947	BASIN 11
1449	23-89_24-1	23-89	24-1	546	8	VCP + CIP + VCP	SANITARY SEWER	Active	1/1/1947	BASIN 11
1450	23-9_23-27	23-9	23-27	231	8	VITRIFIED CLAY PIPE	SANITARY SEWER	Active	1/1/1955	BASIN 10
1451	23-90_23-93	23-90	23-93	52	24	VITRIFIED CLAY PIPE	TRUNK LINE	Active		BASIN 11
1453	23-91_23-96	23-91	23-96	260	15	VCP + CIP + VCP	SANITARY SEWER	Active	1/1/1944	BASIN 11
1454	23-92_23-94	23-92	23-94	40	33	VITRIFIED CLAY PIPE	SANITARY SEWER	Active	1/1/1965	BASIN 11
1455	23-93_23-97	23-93	23-97	205	24	VCP + CIP + VCP	SANITARY SEWER	Active	1/1/1953	BASIN 11
1456	23-94_24-3	23-94	24-3	510	33	VITRIFIED CLAY PIPE	SANITARY SEWER	Active	1/1/1965	BASIN 11
1457	23-96_24-4	23-96	24-4	299	15	VITRIFIED CLAY PIPE	SANITARY SEWER	Active	1/1/1944	BASIN 11
1458	23-97_24-2	23-97	24-2	307	24	VITRIFIED CLAY PIPE	SANITARY SEWER	Active	1/1/1953	BASIN 11
1459	23-98_23-96	23-98	23-96	557	6		TRUNK LINE	Active		BASIN 11
1460	23-99_23-98	23-99	23-98	536	6	VITRIFIED CLAY PIPE	SANITARY SEWER	Active	1/1/1944	BASIN 11
1461	2-4_2-5	2-4	2-5	106	8	VITRIFIED CLAY PIPE	SANITARY SEWER	Active	1/1/1956	BASIN 2
1462	24-1_24-4	24-1	24-4	19	8	VITRIFIED CLAY PIPE	SANITARY SEWER	Active	1/1/1947	BASIN 11
1463	24-10_24-6	24-10	24-6	333	8	VITRIFIED CLAY PIPE	SANITARY SEWER	Active	1/1/1944	BASIN 11
1464	24-11_24-10	24-11	24-10	77	8	VITRIFIED CLAY PIPE	SANITARY SEWER	Active	1/1/1944	BASIN 11
1465	24-12R_24-11	24-12R	24-11	328	8	VITRIFIED CLAY PIPE	SANITARY SEWER	Active	1/1/1944	BASIN 11
1466	24-13_T2	24-13	T2	887	36	VITRIFIED CLAY PIPE	TRUNK LINE	Active		OUTFALL
1467	24-14_24-PF	24-14	24-PF	236	24	VITRIFIED CLAY PIPE	SANITARY SEWER	Active		BASIN 11
1468	24-15_24-PF	24-15	24-PF	236	15	VITRIFIED CLAY PIPE	TRUNK LINE	Active		BASIN 11

1469	24-2_24-14	24-2	24-14	236	24	VITRIFIED CLAY PIPE	SANITARY SEWER	Active	1/1/1953	BASIN 11
1470	24-3_24-PF	24-3	24-PF	244	33	VITRIFIED CLAY PIPE	TRUNK LINE	Active	1/1/1966	BASIN 11
1471	24-4_24-15	24-4	24-15	233	15	VITRIFIED CLAY PIPE	TRUNK LINE	Active	1/1/1944	BASIN 11
1472	24-5_24-4	24-5	24-4	422	8	VITRIFIED CLAY PIPE	SANITARY SEWER	Active	1/1/1944	BASIN 11
1473	24-6_23-110	24-6	23-110	359	8	VITRIFIED CLAY PIPE	SANITARY SEWER	Active	1/1/1944	BASIN 11
1474	24-7R_23-109	24-7R	23-109	175	6	VITRIFIED CLAY PIPE	SANITARY SEWER	Active	1/1/1944	BASIN 11
1475	24-8R_24-10	24-8R	24-10	303	6	VITRIFIED CLAY PIPE	SANITARY SEWER	Active	1/1/1944	BASIN 11
1476	24-9_24-11	24-9	24-11	504	8	VITRIFIED CLAY PIPE	SANITARY SEWER	Active	1/1/1944	BASIN 11
1477	24-PF_24-13	24-PF	24-13	655	36	REINFORCED CONCRETE PIPE	TRUNK LINE	Active	1/1/1971	BASIN 11
1478	2-5_2-6	2-5	2-6	95	8	VITRIFIED CLAY PIPE	SANITARY SEWER	Active	1/1/1956	BASIN 2
1479	25-1_25-2	25-1	25-2	190	8	VITRIFIED CLAY PIPE	SANITARY SEWER	Active	1/1/1965	BASIN 5
1480	25-10_25-8	25-10	25-8	206	8	VITRIFIED CLAY PIPE	SANITARY SEWER	Active	1/1/1963	BASIN 5
1481	25-11R_25-12	25-11R	25-12	103	6	VITRIFIED CLAY PIPE	SANITARY SEWER	Active	1/1/1963	BASIN 5
1482	25-12_25-10	25-12	25-10	294	8	VITRIFIED CLAY PIPE	SANITARY SEWER	Active	1/1/1963	BASIN 5
1483	25-13R_25-14	25-13R	25-14	130	8	VITRIFIED CLAY PIPE	SANITARY SEWER	Active	1/1/1963	BASIN 5
1484	25-14_25-12	25-14	25-12	220	8	VITRIFIED CLAY PIPE	SANITARY SEWER	Active	1/1/1963	BASIN 5
1485	25-15_25-16	25-15	25-16	183	8	VITRIFIED CLAY PIPE	SANITARY SEWER	Active	1/1/1980	BASIN 7
1486	25-16_25-17	25-16	25-17	171	8	VITRIFIED CLAY PIPE	SANITARY SEWER	Active	1/1/1985	BASIN 7
1487	25-17_26-59	25-17	26-59	225	8	VITRIFIED CLAY PIPE	SANITARY SEWER	Active	1/1/1985	BASIN 7
1488	25-18_26-59	25-18	26-59	107	8	VITRIFIED CLAY PIPE	SANITARY SEWER	Active	1/1/1985	BASIN 7
1489	25-19_25-18	25-19	25-18	160	8	DUCTILE IRON PIPE	SANITARY SEWER	Active	1/1/1990	BASIN 7
1490	25-2_26-3	25-2	26-3	234	8	VITRIFIED CLAY PIPE	SANITARY SEWER	Active	1/1/1965	BASIN 5
1491	25-20_25-19	25-20	25-19	224	8	DUCTILE IRON PIPE	SANITARY SEWER	Active	1/1/1990	BASIN 7
1492	25-3R_25-4	25-3R	25-4	152	6	VITRIFIED CLAY PIPE	SANITARY SEWER	Active	1/1/1965	BASIN 5
1493	25-4_25-2	25-4	25-2	182	8	VITRIFIED CLAY PIPE	SANITARY SEWER	Active	1/1/1965	BASIN 5
1494	25-5R_25-6	25-5R	25-6	152	6	VITRIFIED CLAY PIPE	SANITARY SEWER	Active	1/1/1965	BASIN 5
1495	25-6_25-4	25-6	25-4	143	8	VITRIFIED CLAY PIPE	SANITARY SEWER	Active	1/1/1965	BASIN 5
1496	25-7R_25-8	25-7R	25-8	147	6	VITRIFIED CLAY PIPE	SANITARY SEWER	Active	1/1/1965	BASIN 5
1497	25-8_25-6	25-8	25-6	212	8	VITRIFIED CLAY PIPE	SANITARY SEWER	Active	1/1/1965	BASIN 5
1498	25-9R_25-10	25-9R	25-10	45	6	VITRIFIED CLAY PIPE	SANITARY SEWER	Active	1/1/1963	BASIN 5
1499	2-6_2-7	2-6	2-7	260	8	VITRIFIED CLAY PIPE	SANITARY SEWER	Active	1/1/1956	BASIN 2
1500	26-10_26-9	26-10	26-9	314	8	VITRIFIED CLAY PIPE	SANITARY SEWER	Active	1/1/1960	BASIN 5
1501	26-11_27-1	26-11	27-1	427	6	VITRIFIED CLAY PIPE	SANITARY SEWER	Active	1/1/1944	BASIN 5
1502	26-12_26-11	26-12	26-11	300	6	VITRIFIED CLAY PIPE	SANITARY SEWER	Active	1/1/1944	BASIN 5
1503	26-13_26-12	26-13	26-12	290	6	VITRIFIED CLAY PIPE	SANITARY SEWER	Active	1/1/1944	BASIN 5
1504	26-14_26-13	26-14	26-13	120	8	HIGH DENSITY POLYETHYLENE	SANITARY SEWER	Active	9/21/2017	BASIN 5
1505	26-15_26-14	26-15	26-14	55	8	VITRIFIED CLAY PIPE	SANITARY SEWER	Active	1/1/1960	BASIN 5
1506	26-16R_26-15	26-16R	26-15	93	8	VITRIFIED CLAY PIPE	SANITARY SEWER	Active	1/1/1952	BASIN 5
1507	26-17_26-14	26-17	26-14	110	8	VITRIFIED CLAY PIPE	SANITARY SEWER	Active	1/1/1960	BASIN 5
1509	26-18_26-17	26-18	26-17	481	6	VITRIFIED CLAY PIPE	SANITARY SEWER	Active	1/1/1960	BASIN 5
1510	26-19_26-48	26-19	26-48	137	6	VITRIFIED CLAY PIPE	SANITARY SEWER	Active	1/1/1954	BASIN 5
1511	26-1R_26-2	26-1R	26-2	370	6	VITRIFIED CLAY PIPE	SANITARY SEWER	Active	1/1/1973	BASIN 5
1512	26-2_26-65	26-2	26-65	322	8	VITRIFIED CLAY PIPE	SANITARY SEWER	Active	1/1/1965	BASIN 5
1513	26-20R_26-19	26-20R	26-19	286	6	VITRIFIED CLAY PIPE	SANITARY SEWER	Active	1/1/1954	BASIN 5
1514	26-21_26-19	26-21	26-19	115	6	VITRIFIED CLAY PIPE	SANITARY SEWER	Active	1/1/1944	BASIN 5
1515	26-22_26-21	26-22	26-21	241	6	VITRIFIED CLAY PIPE	SANITARY SEWER	Active	1/1/1944	BASIN 5
1516	26-23_26-22	26-23	26-22	119	8	VITRIFIED CLAY PIPE	SANITARY SEWER	Active	1/1/1952	BASIN 5
1517	26-24_26-23	26-24	26-23	181	8	VITRIFIED CLAY PIPE	SANITARY SEWER	Active	1/1/1952	BASIN 5
1518	26-25R_26-24	26-25R	26-24	250	8	VITRIFIED CLAY PIPE	SANITARY SEWER	Active	1/1/1952	BASIN 5
1519	26-26_26-68	26-26	26-68	300	8	VITRIFIED CLAY PIPE	SANITARY SEWER	Active	1/1/1949	BASIN 5
1520	26-27_26-71	26-27	26-71	223	8	VITRIFIED CLAY PIPE	SANITARY SEWER	Active	1/1/1964	BASIN 5
1521	26-28R_26-27	26-28R	26-27	88	8	VITRIFIED CLAY PIPE	SANITARY SEWER	Active	1/1/1964	BASIN 5
1522	26-29R_26-30	26-29R	26-30	170	8	VITRIFIED CLAY PIPE	SANITARY SEWER	Active	1/1/1961	BASIN 7
1523	26-3_26-4	26-3	26-4	45	8	CAST IRON PIPE	SANITARY SEWER	Active	1/1/1965	BASIN 5
1524	26-30_26-31	26-30	26-31	335	8	VITRIFIED CLAY PIPE	SANITARY SEWER	Active	1/1/1960	BASIN 7
1525	26-31_26-33	26-31	26-33	349	8	VITRIFIED CLAY PIPE	SANITARY SEWER	Active	1/1/1960	BASIN 7
1526	26-32R_26-31	26-32R	26-31	147	8	VITRIFIED CLAY PIPE	SANITARY SEWER	Active	1/1/1960	BASIN 7
1527	26-33_26-34	26-33	26-34	230	8	VITRIFIED CLAY PIPE	SANITARY SEWER	Active	1/1/1960	BASIN 7
1528	26-34_26-70	26-34	26-70	287	8	VITRIFIED CLAY PIPE	SANITARY SEWER	Active	1/1/1960	BASIN 7
1529	26-35R_26-34	26-35R	26-34	235	8	VITRIFIED CLAY PIPE	SANITARY SEWER	Active	1/1/1960	BASIN 7
1530	26-36_26-69	26-36	26-69	332	8	VITRIFIED CLAY PIPE	SANITARY SEWER	Active	1/1/1961	BASIN 7
1531	26-37_26-36	26-37	26-36	296	8	VITRIFIED CLAY PIPE	SANITARY SEWER	Active	1/1/1961	BASIN 7
1532	26-38R_26-36	26-38R	26-36	144	8	VITRIFIED CLAY PIPE	SANITARY SEWER	Active	1/1/1961	BASIN 7
1533	26-39_27-9	26-39	27-9	373	8	VITRIFIED CLAY PIPE	SANITARY SEWER	Active	1/1/1960	BASIN 7
1534	26-4_26-5	26-4	26-5	14	6	CAST IRON PIPE	FORCE MAIN	Active	1/1/1965	BASIN 5
1535	26-40_26-39	26-40	26-39	305	8	VITRIFIED CLAY PIPE	SANITARY SEWER	Active	1/1/1960	BASIN 7
1536	26-41_26-40	26-41	26-40	361	8	VITRIFIED CLAY PIPE	SANITARY SEWER	Active	1/1/1960	BASIN 7
1537	26-42_26-41	26-42	26-41	586	8	VITRIFIED CLAY PIPE	SANITARY SEWER	Active	1/1/1964	BASIN 7
1538	26-43_26-42	26-43	26-42	80	8	VITRIFIED CLAY PIPE	SANITARY SEWER	Active	1/1/1964	BASIN 7
1539	26-44_25-12	26-44	25-12	204	8	VITRIFIED CLAY PIPE	SANITARY SEWER	Active	1/1/1963	BASIN 5
1540	26-45_26-44	26-45	26-44	123	8	VITRIFIED CLAY PIPE	SANITARY SEWER	Active	1/1/1963	BASIN 5
1541	26-46_26-45	26-46	26-45	248	8	VITRIFIED CLAY PIPE	SANITARY SEWER	Active	1/1/1963	BASIN 5
1542	26-47R_26-45	26-47R	26-45	50	8	VITRIFIED CLAY PIPE	SANITARY SEWER	Active	1/1/1963	BASIN 5

1543	26-48_26-18	26-48	26-18	403	6	VITRIFIED CLAY PIPE	SANITARY SEWER	Active		BASIN 5
1544	26-5_26-74	26-5	26-74	46	8	DUCTILE IRON PIPE	FORCE MAIN	Active		
1545	26-50_34-1	26-50	34-1	601	8	VITRIFIED CLAY PIPE	SANITARY SEWER	Active	1/1/1978	BASIN 7
1546	26-51R_27-5	26-51R	27-5	425	6	VITRIFIED CLAY PIPE	SANITARY SEWER	Active	1/1/1944	BASIN 5
1547	26-53_26-50	26-53	26-50	307	8	VITRIFIED CLAY PIPE	SANITARY SEWER	Active	1/1/1978	BASIN 7
1548	26-54_26-53	26-54	26-53	362	8	VITRIFIED CLAY PIPE	SANITARY SEWER	Active	1/1/1978	BASIN 7
1549	26-55_26-54	26-55	26-54	318	8	VITRIFIED CLAY PIPE	SANITARY SEWER	Active	1/1/1978	BASIN 7
1550	26-56_26-55	26-56	26-55	241	8	VITRIFIED CLAY PIPE	SANITARY SEWER	Active	1/1/1985	BASIN 7
1551	26-57_26-56	26-57	26-56	77	8	VITRIFIED CLAY PIPE	SANITARY SEWER	Active	1/1/1985	BASIN 7
1552	26-58_26-57	26-58	26-57	319	8	VITRIFIED CLAY PIPE	SANITARY SEWER	Active	1/1/1985	BASIN 7
1553	26-59_26-57	26-59	26-57	345	8	VITRIFIED CLAY PIPE	SANITARY SEWER	Active	1/1/1985	BASIN 7
1554	26-63_26-54	26-63	26-54	247	8	DUCTILE IRON PIPE	SANITARY SEWER	Active	1/1/1979	BASIN 7
1555	26-64_26-63	26-64	26-63	249	8	DUCTILE IRON PIPE	SANITARY SEWER	Active	1/1/1979	BASIN 7
1556	26-65_26-3	26-65	26-3	55	8	VITRIFIED CLAY PIPE	SANITARY SEWER	Active	1/1/1995	BASIN 5
1557	26-66_26-65	26-66	26-65	294	8	VITRIFIED CLAY PIPE	SANITARY SEWER	Active	1/1/1995	BASIN 5
1559	26-67_26-66	26-67	26-66	90	8	VITRIFIED CLAY PIPE	SANITARY SEWER	Active	1/1/1995	BASIN 5
1560	26-68_27-3	26-68	27-3	247	8	VITRIFIED CLAY PIPE	SANITARY SEWER	Active	1/1/1949	BASIN 5
1561	26-69_26-70	26-69	26-70	400	8	VITRIFIED CLAY PIPE	SANITARY SEWER	Active	1/1/1961	BASIN 7
1562	26-7_26-8	26-7	26-8	125	8	VITRIFIED CLAY PIPE	SANITARY SEWER	Active	1/1/1960	BASIN 5
1563	26-70_27-7	26-70	27-7	313	8	VITRIFIED CLAY PIPE	SANITARY SEWER	Active	1/1/1960	BASIN 7
1564	26-71_26-26	26-71	26-26	141	8	VITRIFIED CLAY PIPE	SANITARY SEWER	Active	1/1/1964	BASIN 5
1565	26-72_26-73	26-72	26-73	370	8	VITRIFIED CLAY PIPE	SANITARY SEWER	Active		BASIN 5
1566	26-73_26-10	26-73	26-10	370	8	VITRIFIED CLAY PIPE	SANITARY SEWER	Active		BASIN 5
1567	26-74_26-75	26-74	26-75	379	8	DUCTILE IRON PIPE	FORCE MAIN	Active		
1568	26-75_26-8	26-75	26-8	339	8	DUCTILE IRON PIPE	FORCE MAIN	Active		BASIN 5
1569	26-8_26-17	26-8	26-17	255	8	VITRIFIED CLAY PIPE	SANITARY SEWER	Active	1/1/1960	BASIN 5
1570	26-9_26-8	26-9	26-8	240	8	VITRIFIED CLAY PIPE	SANITARY SEWER	Active	1/1/1960	BASIN 5
1571	2-7_2-8	2-7	2-8	176	8	VITRIFIED CLAY PIPE	SANITARY SEWER	Active	1/1/1956	BASIN 2
1572	27-1_27-103	27-1	27-103	170	6	VITRIFIED CLAY PIPE	SANITARY SEWER	Active	1/1/1944	BASIN 5
1573	27-100_27-99	27-100	27-99	250	8	VITRIFIED CLAY PIPE	SANITARY SEWER	Active	1/1/1953	BASIN 5
1574	27-101_27-100	27-101	27-100	130	8	VITRIFIED CLAY PIPE	SANITARY SEWER	Active	1/1/1953	BASIN 5
1575	27-102R_27-128	27-102R	27-128	45	8	VITRIFIED CLAY PIPE	SANITARY SEWER	Active	1/1/1953	BASIN 5
1576	27-103_27-127	27-103	27-127	28	6	VITRIFIED CLAY PIPE	SANITARY SEWER	Active		BASIN 5
1577	27-104_27-58	27-104	27-58	287	6	VITRIFIED CLAY PIPE	SANITARY SEWER	Active	1/1/1944	BASIN 7
1578	27-105_27-3	27-105	27-3	70	6	VITRIFIED CLAY PIPE	SANITARY SEWER	Active	1/1/1944	BASIN 5
1579	27-106_27-75	27-106	27-75	157	8	VITRIFIED CLAY PIPE	SANITARY SEWER	Active	1/1/1954	BASIN 5
1580	27-107_27-109	27-107	27-109	150	6	VITRIFIED CLAY PIPE	SANITARY SEWER	Active		BASIN 7
1581	27-108R_27-77	27-108R	27-77	97	8	VITRIFIED CLAY PIPE	SANITARY SEWER	Active	1/1/1954	BASIN 5
1582	27-109_27-7	27-109	27-7	180	6	VITRIFIED CLAY PIPE	SANITARY SEWER	Active	1/1/1989	BASIN 7
1583	27-110_27-109	27-110	27-109	228	8	VITRIFIED CLAY PIPE	SANITARY SEWER	Active		BASIN 7
1584	27-111_27-110	27-111	27-110	100	8	VITRIFIED CLAY PIPE	SANITARY SEWER	Active		BASIN 7
1585	27-112_28-5	27-112	28-5	90	6	VITRIFIED CLAY PIPE	SANITARY SEWER	Active	1/1/1948	BASIN 7
1586	27-113_28-11	27-113	28-11	84	6	VITRIFIED CLAY PIPE	SANITARY SEWER	Active	1/1/1948	BASIN 7
1587	27-114_27-90	27-114	27-90	199	8	VITRIFIED CLAY PIPE	SANITARY SEWER	Active	1/1/1952	BASIN 5
1588	27-115_27-119	27-115	27-119	218	8	VITRIFIED CLAY PIPE	SANITARY SEWER	Active	1/1/1954	BASIN 7
1589	27-116_28-15	27-116	28-15	72	8	VITRIFIED CLAY PIPE	SANITARY SEWER	Active	1/1/1953	BASIN 7
1590	27-117_27-64	27-117	27-64	244	8	VITRIFIED CLAY PIPE	SANITARY SEWER	Active	1/1/1953	BASIN 5
1591	27-118_27-62	27-118	27-62	195	8	VITRIFIED CLAY PIPE	SANITARY SEWER	Active	11/30/1998	BASIN 7
1592	27-119_28-11	27-119	28-11	84	8	VITRIFIED CLAY PIPE	SANITARY SEWER	Active	1/1/1954	BASIN 7
1593	27-12_27-14	27-12	27-14	93	6	VITRIFIED CLAY PIPE	SANITARY SEWER	Active	1/1/1954	BASIN 7
1594	27-120_27-121	27-120	27-121	135	8	VITRIFIED CLAY PIPE	SANITARY SEWER	Active	9/1/1950	BASIN 7
1595	27-121_27-17	27-121	27-17	211	8	VITRIFIED CLAY PIPE	SANITARY SEWER	Active	1/1/1954	BASIN 7
1596	27-122_27-117	27-122	27-117	292	8	VITRIFIED CLAY PIPE	SANITARY SEWER	Active	1/1/1953	BASIN 5
1597	27-123_27-122	27-123	27-122	233	8		SANITARY SEWER	Active		BASIN 5
1598	27-124_27-123	27-124	27-123	50	8		SANITARY SEWER	Active		BASIN 5
1599	27-125_27-124	27-125	27-124	163	8		SANITARY SEWER	Active		BASIN 5
1600	27-126_27-127	27-126	27-127	66	8	VITRIFIED CLAY PIPE	SANITARY SEWER	Active		BASIN 5
1601	27-127_27-99	27-127	27-99	119	6	VITRIFIED CLAY PIPE	SANITARY SEWER	Active	1/1/1944	BASIN 5
1602	27-128_27-101	27-128	27-101	200	8	VITRIFIED CLAY PIPE	SANITARY SEWER	Active	1/1/1953	BASIN 5
1603	27-129_27-1	27-129	27-1	375	6	VITRIFIED CLAY PIPE	SANITARY SEWER	Active	1/1/1944	BASIN 5
1604	27-13R_27-12	27-13R	27-12	408	8	VITRIFIED CLAY PIPE	SANITARY SEWER	Active	1/1/1954	BASIN 7
1605	27-14_27-16	27-14	27-16	370	8	VITRIFIED CLAY PIPE	SANITARY SEWER	Active	1/1/1954	BASIN 7
1606	27-15_27-16	27-15	27-16	314	8	VITRIFIED CLAY PIPE	SANITARY SEWER	Active		BASIN 7
1607	27-16_27-17	27-16	27-17	85	8	VITRIFIED CLAY PIPE	SANITARY SEWER	Active	1/1/1954	BASIN 7
1608	27-17_27-18	27-17	27-18	216	8	VITRIFIED CLAY PIPE	SANITARY SEWER	Active	1/1/1954	BASIN 7
1609	27-18_27-20	27-18	27-20	194	8	VITRIFIED CLAY PIPE	SANITARY SEWER	Active	1/1/1954	BASIN 7
1610	27-19R_27-18	27-19R	27-18	140	8	VITRIFIED CLAY PIPE	SANITARY SEWER	Active	1/1/1948	BASIN 7
1611	27-2_27-129	27-2	27-129	230	6	VITRIFIED CLAY PIPE	SANITARY SEWER	Active	1/1/1944	BASIN 5
1612	27-20_27-115	27-20	27-115	444	8	VITRIFIED CLAY PIPE	SANITARY SEWER	Active	1/1/1954	BASIN 7
1614	27-21_27-119	27-21	27-119	115	6	VITRIFIED CLAY PIPE	SANITARY SEWER	Active	1/1/1948	BASIN 7
1615	27-22_27-21	27-22	27-21	152	8	HIGH DENSITY POLYETHYLENE	SANITARY SEWER	Active	11/10/2003	BASIN 7
1616	27-23_27-21	27-23	27-21	172	6	HIGH DENSITY POLYETHYLENE	SANITARY SEWER	Active	11/10/2003	BASIN 7
1617	27-24_27-22	27-24	27-22	248	8	HIGH DENSITY POLYETHYLENE	SANITARY SEWER	Active	11/10/2003	BASIN 7

1618	27-25_27-23	27-25	27-23	241	6	VITRIFIED CLAY PIPE	SANITARY SEWER	Active	1/1/1948	BASIN 7
1619	27-26_27-24	27-26	27-24	197	8	HIGH DENSITY POLYETHYLENE	SANITARY SEWER	Active	11/10/2003	BASIN 7
1620	27-27_27-25	27-27	27-25	246	6	VITRIFIED CLAY PIPE	SANITARY SEWER	Active	1/1/1948	BASIN 7
1621	27-28_27-26	27-28	27-26	156	8	HIGH DENSITY POLYETHYLENE	SANITARY SEWER	Active	11/10/2003	BASIN 7
1622	27-29_27-28	27-29	27-28	161	8	HIGH DENSITY POLYETHYLENE	SANITARY SEWER	Active	11/10/2003	BASIN 7
1623	27-3_27-2	27-3	27-2	433	6	VITRIFIED CLAY PIPE	SANITARY SEWER	Active	1/1/1944	BASIN 5
1624	27-30_27-29	27-30	27-29	206	8	HIGH DENSITY POLYETHYLENE	SANITARY SEWER	Active	11/10/2003	BASIN 7
1625	27-31_27-27	27-31	27-27	193	6	VITRIFIED CLAY PIPE	SANITARY SEWER	Active	1/1/1948	BASIN 7
1626	27-32_27-31	27-32	27-31	164	8	VITRIFIED CLAY PIPE	SANITARY SEWER	Active	1/1/1951	BASIN 7
1627	27-33R_27-32	27-33R	27-32	117	8	VITRIFIED CLAY PIPE	SANITARY SEWER	Active	1/1/1951	BASIN 7
1628	27-34_27-31	27-34	27-31	193	6	VITRIFIED CLAY PIPE	SANITARY SEWER	Active	1/1/1948	BASIN 7
1629	27-35R_27-34	27-35R	27-34	275	8	VITRIFIED CLAY PIPE	SANITARY SEWER	Active	1/1/1948	BASIN 7
1630	27-36_28-8	27-36	28-8	86	6	VITRIFIED CLAY PIPE	SANITARY SEWER	Active	1/1/1948	BASIN 7
1631	27-37_27-36	27-37	27-36	195	6	VITRIFIED CLAY PIPE	SANITARY SEWER	Active	1/1/1948	BASIN 7
1632	27-38R_27-37	27-38R	27-37	287	6	VITRIFIED CLAY PIPE	SANITARY SEWER	Active	1/1/1948	BASIN 7
1633	27-39_27-113	27-39	27-113	152	8	HIGH DENSITY POLYETHYLENE	SANITARY SEWER	Active	3/12/2014	BASIN 7
1634	27-40_27-39	27-40	27-39	111	6	VITRIFIED CLAY PIPE	SANITARY SEWER	Active	1/1/1948	BASIN 7
1635	27-41_27-40	27-41	27-40	69	6	VITRIFIED CLAY PIPE	SANITARY SEWER	Active	1/1/1948	BASIN 7
1636	27-42R_27-41	27-42R	27-41	82	6	VITRIFIED CLAY PIPE	SANITARY SEWER	Active	1/1/1948	BASIN 7
1637	27-43_27-40	27-43	27-40	176	6	VITRIFIED CLAY PIPE	SANITARY SEWER	Active	1/1/1948	BASIN 7
1638	27-44_27-43	27-44	27-43	120	6	VITRIFIED CLAY PIPE	SANITARY SEWER	Active	1/1/1948	BASIN 7
1639	27-45R_27-44	27-45R	27-44	120	6	VITRIFIED CLAY PIPE	SANITARY SEWER	Active	1/1/1948	BASIN 7
1640	27-46_27-44	27-46	27-44	120	6	VITRIFIED CLAY PIPE	SANITARY SEWER	Active	1/1/1948	BASIN 7
1641	27-47R_27-46	27-47R	27-46	200	6	VITRIFIED CLAY PIPE	SANITARY SEWER	Active	1/1/1948	BASIN 7
1642	27-48R_27-46	27-48R	27-46	200	6	VITRIFIED CLAY PIPE	SANITARY SEWER	Active	1/1/1948	BASIN 7
1643	27-49_27-112	27-49	27-112	218	6	VITRIFIED CLAY PIPE	SANITARY SEWER	Active	1/1/1948	BASIN 7
1644	27-5_27-105	27-5	27-105	411	6	VITRIFIED CLAY PIPE	SANITARY SEWER	Active	1/1/1944	BASIN 5
1645	27-50_27-49	27-50	27-49	200	6	VITRIFIED CLAY PIPE	SANITARY SEWER	Active	1/1/1948	BASIN 7
1646	27-51_27-50	27-51	27-50	21	8	VITRIFIED CLAY PIPE	SANITARY SEWER	Active	1/1/1948	BASIN 7
1647	27-52R_27-51	27-52R	27-51	71	8	VITRIFIED CLAY PIPE	SANITARY SEWER	Active	1/1/1948	BASIN 7
1648	27-53_27-50	27-53	27-50	150	6	VITRIFIED CLAY PIPE	SANITARY SEWER	Active	1/1/1948	BASIN 7
1649	27-54_27-53	27-54	27-53	100	8	VITRIFIED CLAY PIPE	SANITARY SEWER	Active	1/1/1948	BASIN 7
1650	27-55R_27-54	27-55R	27-54	332	6	VITRIFIED CLAY PIPE	SANITARY SEWER	Active	1/1/1948	BASIN 7
1651	27-56R_27-54	27-56R	27-54	215	6	VITRIFIED CLAY PIPE	SANITARY SEWER	Active	1/1/1948	BASIN 7
1652	27-57_28-3	27-57	28-3	380	6	VITRIFIED CLAY PIPE	SANITARY SEWER	Active	1/1/1944	BASIN 7
1653	27-58_27-57	27-58	27-57	540	6	VITRIFIED CLAY PIPE	SANITARY SEWER	Active	1/1/1944	BASIN 7
1654	27-59_27-58	27-59	27-58	71	8	VITRIFIED CLAY PIPE	SANITARY SEWER	Active	1/1/1957	BASIN 7
1655	27-6_27-107	27-6	27-107	81	6	VITRIFIED CLAY PIPE	SANITARY SEWER	Active	1/1/1992	BASIN 7
1656	27-60_27-59	27-60	27-59	71	8	VITRIFIED CLAY PIPE	SANITARY SEWER	Active	1/1/1957	BASIN 7
1657	27-61_27-104	27-61	27-104	119	6	HIGH DENSITY POLYETHYLENE	SANITARY SEWER	Active	9/1/2005	BASIN 7
1658	27-62_27-61	27-62	27-61	329	6	VITRIFIED CLAY PIPE	SANITARY SEWER	Active	1/1/1944	BASIN 7
1659	27-63R_27-62	27-63R	27-62	320	6	VITRIFIED CLAY PIPE	SANITARY SEWER	Active	1/1/1944	BASIN 7
1660	27-64_27-65	27-64	27-65	278	8	VITRIFIED CLAY PIPE	SANITARY SEWER	Active	1/1/1953	BASIN 5
1661	27-65_27-66	27-65	27-66	118	8	VITRIFIED CLAY PIPE	SANITARY SEWER	Active	1/1/1953	BASIN 5
1662	27-66_28-85	27-66	28-85	317	10	HIGH DENSITY POLYETHYLENE	SANITARY SEWER	Active	8/9/2016	BASIN 5
1663	27-69_27-70	27-69	27-70	118	8	VITRIFIED CLAY PIPE	SANITARY SEWER	Active	1/1/1955	BASIN 5
1664	27-7_27-12	27-7	27-12	451	6	VITRIFIED CLAY PIPE	SANITARY SEWER	Active	1/1/1959	BASIN 7
1665	27-70_27-66	27-70	27-66	320	8	VITRIFIED CLAY PIPE	SANITARY SEWER	Active	12/21/2000	BASIN 5
1666	27-71_27-70	27-71	27-70	300	6	VITRIFIED CLAY PIPE	SANITARY SEWER	Active	1/1/1944	BASIN 5
1667	27-72_27-71	27-72	27-71	260	6	VITRIFIED CLAY PIPE	SANITARY SEWER	Active	1/1/1968	BASIN 5
1668	27-73R_27-72	27-73R	27-72	160	6	VITRIFIED CLAY PIPE	SANITARY SEWER	Active	1/1/1968	BASIN 5
1669	27-74_27-72	27-74	27-72	140	6	VITRIFIED CLAY PIPE	SANITARY SEWER	Active	1/1/1944	BASIN 5
1670	27-75_27-74	27-75	27-74	60	6	VITRIFIED CLAY PIPE	SANITARY SEWER	Active	1/1/1954	BASIN 5
1671	27-76_27-75	27-76	27-75	363	6	VITRIFIED CLAY PIPE	SANITARY SEWER	Active	1/1/1944	BASIN 5
1672	27-77_27-106	27-77	27-106	242	8	VITRIFIED CLAY PIPE	SANITARY SEWER	Active	1/1/1954	BASIN 5
1673	27-78_27-77	27-78	27-77	97	8	VITRIFIED CLAY PIPE	SANITARY SEWER	Active	1/1/1954	BASIN 5
1674	27-79R_27-78	27-79R	27-78	150	8	VITRIFIED CLAY PIPE	SANITARY SEWER	Active	1/1/1954	BASIN 5
1675	27-8_27-7	27-8	27-7	236	8	VITRIFIED CLAY PIPE	SANITARY SEWER	Active	1/1/1960	BASIN 7
1676	2-78_3-79	2-78	3-79	123	8	VITRIFIED CLAY PIPE	SANITARY SEWER	Active	1/1/1952	BASIN 2
1677	27-80_27-77	27-80	27-77	225	8	VITRIFIED CLAY PIPE	SANITARY SEWER	Active	1/1/1954	BASIN 5
1678	27-81_27-69	27-81	27-69	416	8	VITRIFIED CLAY PIPE	SANITARY SEWER	Active	1/1/1955	BASIN 5
1679	27-82_27-81	27-82	27-81	270	8	VITRIFIED CLAY PIPE	SANITARY SEWER	Active	1/1/1952	BASIN 5
1680	27-83_27-82	27-83	27-82	104	8	VITRIFIED CLAY PIPE	SANITARY SEWER	Active		BASIN 5
1681	27-84R_27-83	27-84R	27-83	127	8	VITRIFIED CLAY PIPE	SANITARY SEWER	Active		BASIN 5
1682	27-85_27-82	27-85	27-82	104	8	VITRIFIED CLAY PIPE	SANITARY SEWER	Active	1/1/1956	BASIN 5
1683	27-86_27-85	27-86	27-85	113	8	VITRIFIED CLAY PIPE	SANITARY SEWER	Active	1/1/1956	BASIN 5
1684	27-87R_27-86	27-87R	27-86	113	8	VITRIFIED CLAY PIPE	SANITARY SEWER	Active	1/1/1956	BASIN 5
1685	27-88_27-82	27-88	27-82	360	8	VITRIFIED CLAY PIPE	SANITARY SEWER	Active	1/1/1952	BASIN 5
1686	27-89_27-88	27-89	27-88	103	8	VITRIFIED CLAY PIPE	SANITARY SEWER	Active	1/1/1952	BASIN 5
1687	27-9_27-8	27-9	27-8	135	8	VITRIFIED CLAY PIPE	SANITARY SEWER	Active	1/1/1960	BASIN 7
1688	27-90_27-89	27-90	27-89	92	8	VITRIFIED CLAY PIPE	SANITARY SEWER	Active	1/1/1952	BASIN 5
1689	27-91_27-90	27-91	27-90	192	8	VITRIFIED CLAY PIPE	SANITARY SEWER	Active	1/1/1952	BASIN 5
1690	27-92_27-91	27-92	27-91	114	8	VITRIFIED CLAY PIPE	SANITARY SEWER	Active	1/1/1952	BASIN 5

1691	27-93R_27-92	27-93R	27-92	114	8	VITRIFIED CLAY PIPE	SANITARY SEWER	Active	1/1/1952	BASIN 5
1692	27-94R_27-95	27-94R	27-95	125	8	VITRIFIED CLAY PIPE	SANITARY SEWER	Active	1/1/1952	BASIN 5
1694	27-95_27-97	27-95	27-97	119	8	VITRIFIED CLAY PIPE	SANITARY SEWER	Active	1/1/1952	BASIN 5
1695	27-96_27-95	27-96	27-95	180	8	VITRIFIED CLAY PIPE	SANITARY SEWER	Active	1/1/1959	BASIN 5
1696	27-97_27-98	27-97	27-98	212	8	VITRIFIED CLAY PIPE	SANITARY SEWER	Active	1/1/1952	BASIN 5
1697	27-98_27-114	27-98	27-114	145	8	VITRIFIED CLAY PIPE	SANITARY SEWER	Active	1/1/1952	BASIN 5
1698	27-99_27-81	27-99	27-81	424	8	VITRIFIED CLAY PIPE	SANITARY SEWER	Active	1/1/1955	BASIN 5
1699	2-8_2-9	2-8	2-9	100	8	VITRIFIED CLAY PIPE	SANITARY SEWER	Active	1/1/1956	BASIN 2
1700	28-100_28-101	28-100	28-101	107	8	VITRIFIED CLAY PIPE	SANITARY SEWER	Active	1/1/1980	BASIN 6
1701	28-101_28-89	28-101	28-89	85	8	VITRIFIED CLAY PIPE	SANITARY SEWER	Active	1/1/1980	BASIN 6
1702	28-102_28-101	28-102	28-101	247	8	VITRIFIED CLAY PIPE	SANITARY SEWER	Active	1/1/1980	BASIN 6
1703	28-103_28-104	28-103	28-104	273	8	VITRIFIED CLAY PIPE	SANITARY SEWER	Active	1/1/1989	BASIN 5
1704	28-104_28-46	28-104	28-46	210	10	VITRIFIED CLAY PIPE	SANITARY SEWER	Active	1/1/1989	BASIN 5
1705	28-105_28-20	28-105	28-20	203	6	VITRIFIED CLAY PIPE	SANITARY SEWER	Active	1/1/1947	BASIN 7
1706	28-106_28-21	28-106	28-21	220	6	VITRIFIED CLAY PIPE	SANITARY SEWER	Active	1/1/1947	BASIN 7
1708	28-107_28-96	28-107	28-96	137	12	VITRIFIED CLAY PIPE	SANITARY SEWER	Active	1/1/1953	BASIN 7
1709	28-108_28-68	28-108	28-68	265	6		SANITARY SEWER	Active		BASIN 7
1710	28-109_28-110	28-109	28-110	200	8	VITRIFIED CLAY PIPE	SANITARY SEWER	Active	10/11/2006	BASIN 5
1711	28-11_28-9	28-11	28-9	117	8	VITRIFIED CLAY PIPE	SANITARY SEWER	Active	1/1/1954	BASIN 7
1712	28-110_28-102	28-110	28-102	56	8	VITRIFIED CLAY PIPE	SANITARY SEWER	Active	10/11/2006	BASIN 6
1713	28-12_28-51	28-12	28-51	259	10	VITRIFIED CLAY PIPE	SANITARY SEWER	Active	1/1/1953	BASIN 5
1714	28-13_28-12	28-13	28-12	287	8	VITRIFIED CLAY PIPE	SANITARY SEWER	Active	10/3/2005	BASIN 5
1715	28-14_28-9	28-14	28-9	390	8	VITRIFIED CLAY PIPE	SANITARY SEWER	Active	1/1/1944	BASIN 7
1716	28-15_28-16	28-15	28-16	153	6	VITRIFIED CLAY PIPE	SANITARY SEWER	Active	1/1/1953	BASIN 7
1717	28-16_28-14	28-16	28-14	241	8	VITRIFIED CLAY PIPE	SANITARY SEWER	Active	12/21/2000	BASIN 7
1718	28-17_28-16	28-17	28-16	149	6	VITRIFIED CLAY PIPE	SANITARY SEWER	Active	1/1/1944	BASIN 7
1719	28-18_28-17	28-18	28-17	129	6	VITRIFIED CLAY PIPE	SANITARY SEWER	Active	1/1/1946	BASIN 7
1720	28-19_28-18	28-19	28-18	129	6	VITRIFIED CLAY PIPE	SANITARY SEWER	Active	1/1/1946	BASIN 7
1721	28-2_27-122	28-2	27-122	292	8	VITRIFIED CLAY PIPE	SANITARY SEWER	Active	1/1/1953	BASIN 5
1722	28-20_28-21	28-20	28-21	275	6	VITRIFIED CLAY PIPE	SANITARY SEWER	Active	1/1/1946	BASIN 7
1723	28-21_28-22	28-21	28-22	257	6	VITRIFIED CLAY PIPE	SANITARY SEWER	Active	1/1/1946	BASIN 7
1724	28-22_28-23	28-22	28-23	45	6	VITRIFIED CLAY PIPE	SANITARY SEWER	Active	1/1/1946	BASIN 7
1725	28-23_28-24	28-23	28-24	134	8	VITRIFIED CLAY PIPE	SANITARY SEWER	Active	1/1/1954	BASIN 7
1727	28-24_28-25	28-24	28-25	190	8	VITRIFIED CLAY PIPE	SANITARY SEWER	Active	1/1/1954	BASIN 7
1728	28-25_28-27	28-25	28-27	184	8	VITRIFIED CLAY PIPE	SANITARY SEWER	Active	1/1/1954	BASIN 7
1729	28-26_28-25	28-26	28-25	82	8	VITRIFIED CLAY PIPE	SANITARY SEWER	Active	1/1/1954	BASIN 7
1730	28-27_28-92	28-27	28-92	191	8	VITRIFIED CLAY PIPE	SANITARY SEWER	Active	11/10/2008	BASIN 7
1731	28-28_28-27	28-28	28-27	97	6	VITRIFIED CLAY PIPE	SANITARY SEWER	Active	1/1/1944	BASIN 7
1732	28-29R_28-28	28-29R	28-28	200	6	REINFORCED CONCRETE PIPE	SANITARY SEWER	Active	1/1/1972	BASIN 7
1733	28-3_28-2	28-3	28-2	221	8	VITRIFIED CLAY PIPE	OVERFLOW	Active		BASIN 5
1734	28-3_28-5	28-3	28-5	312	8	VITRIFIED CLAY PIPE	SANITARY SEWER	Active	1/1/1944	BASIN 7
1735	28-30R_28-28	28-30R	28-28	231	6	VITRIFIED CLAY PIPE	SANITARY SEWER	Active	1/1/1944	BASIN 7
1736	28-31_28-32	28-31	28-32	45	6	VITRIFIED CLAY PIPE	SANITARY SEWER	Active	1/1/1974	BASIN 8
1737	28-32_35-96	28-32	35-96	280	6	VITRIFIED CLAY PIPE	SANITARY SEWER	Active	1/1/1974	BASIN 8
1738	28-33R_28-31	28-33R	28-31	258	6	VITRIFIED CLAY PIPE	SANITARY SEWER	Active	1/1/1974	BASIN 8
1739	28-34R_29-44	28-34R	29-44	336	6	VITRIFIED CLAY PIPE	SANITARY SEWER	Active	1/1/1944	BASIN 7
1740	28-35_28-36	28-35	28-36	167	8	VITRIFIED CLAY PIPE	SANITARY SEWER	Active	1/1/2009	BASIN 7
1741	28-36_28-38	28-36	28-38	282	6	VITRIFIED CLAY PIPE	SANITARY SEWER	Active	1/1/1944	BASIN 7
1742	28-37R_28-36	28-37R	28-36	260	6	VITRIFIED CLAY PIPE	SANITARY SEWER	Active	1/1/1967	BASIN 7
1744	28-38_28-107	28-38	28-107	70	12	VITRIFIED CLAY PIPE	SANITARY SEWER	Active	11/1/1998	BASIN 7
1746	28-39_28-104	28-39	28-104	370	10	VITRIFIED CLAY PIPE	SANITARY SEWER	Active	1/1/1953	BASIN 5
1747	28-40_28-45	28-40	28-45	73	8	VITRIFIED CLAY PIPE	SANITARY SEWER	Active		BASIN 6
1749	28-41_28-38	28-41	28-38	300	12	HIGH DENSITY POLYETHYLENE	SANITARY SEWER	Active	1/1/1998	BASIN 7
1751	28-42_28-41	28-42	28-41	157	10	STEEL PIPE	SANITARY SEWER	Active	1/1/1953	BASIN 7
1752	28-43_28-42	28-43	28-42	157	10	VITRIFIED CLAY PIPE	SANITARY SEWER	Active	1/1/1953	BASIN 7
1754	28-44_28-98	28-44	28-98	25	8	VITRIFIED CLAY PIPE	SANITARY SEWER	Active	1/1/1974	BASIN 6
1755	28-45_28-44	28-45	28-44	200	8	VITRIFIED CLAY PIPE	SANITARY SEWER	Active	1/1/1975	BASIN 7
1756	28-46_28-47	28-46	28-47	141	10	VITRIFIED CLAY PIPE	SANITARY SEWER	Active	1/1/1953	BASIN 5
1757	28-47_28-50	28-47	28-50	131	10	VITRIFIED CLAY PIPE	SANITARY SEWER	Active	1/1/1953	BASIN 5
1758	28-48_28-45	28-48	28-45	73	8	VITRIFIED CLAY PIPE	SANITARY SEWER	Active		BASIN 6
1759	28-48R_28-47	28-48R	28-47	300	6	VITRIFIED CLAY PIPE	SANITARY SEWER	Active	1/1/1955	BASIN 5
1760	28-49R_28-50	28-49R	28-50	327	6	VITRIFIED CLAY PIPE	SANITARY SEWER	Active	1/1/1953	BASIN 5
1761	28-5_28-65	28-5	28-65	443	6	VITRIFIED CLAY PIPE	SANITARY SEWER	Active	1/1/1944	BASIN 7
1762	28-50_28-12	28-50	28-12	61	10	VITRIFIED CLAY PIPE	SANITARY SEWER	Active	1/1/1953	BASIN 5
1763	28-51_19-109	28-51	19-109	430	10	VITRIFIED CLAY PIPE	SANITARY SEWER	Active	1/1/1953	BASIN 5
1764	28-60_19-101	28-60	19-101	379	10	HIGH DENSITY POLYETHYLENE	SANITARY SEWER	Active	7/20/2016	BASIN 5
1765	28-61_28-60	28-61	28-60	345	6	VITRIFIED CLAY PIPE	SANITARY SEWER	Active	1/1/1944	BASIN 5
1766	28-62_28-61	28-62	28-61	185	6	VITRIFIED CLAY PIPE	SANITARY SEWER	Active	1/1/1944	BASIN 5
1767	28-63_28-62	28-63	28-62	416	6	VITRIFIED CLAY PIPE	SANITARY SEWER	Active	1/1/1944	BASIN 5
1768	28-64_28-65	28-64	28-65	425	6	VITRIFIED CLAY PIPE	SANITARY SEWER	Active		BASIN 7
1769	28-65_28-77	28-65	28-77	380	6	VITRIFIED CLAY PIPE	SANITARY SEWER	Active	1/1/1944	BASIN 7
1770	28-66_28-65	28-66	28-65	160	6	VITRIFIED CLAY PIPE	SANITARY SEWER	Active	1/1/1945	BASIN 7
1771	28-67_28-66	28-67	28-66	397	6	VITRIFIED CLAY PIPE	SANITARY SEWER	Active	1/1/1953	BASIN 7

1772	28-68_28-69	28-68	28-69	435	6	VITRIFIED CLAY PIPE	SANITARY SEWER	Active	1/1/1945	BASIN 7
1773	28-69_28-71	28-69	28-71	199	6	VITRIFIED CLAY PIPE	SANITARY SEWER	Active	1/1/1945	BASIN 7
1774	28-6R_28-7	28-6R	28-7	175	6	VITRIFIED CLAY PIPE	SANITARY SEWER	Active	1/1/1948	BASIN 7
1775	28-7_28-8	28-7	28-8	319	6	VITRIFIED CLAY PIPE	SANITARY SEWER	Active	1/1/1948	BASIN 7
1776	28-70_28-71	28-70	28-71	197	10	HIGH DENSITY POLYETHYLENE	SANITARY SEWER	Active	7/11/2017	BASIN 7
1777	28-71_28-94	28-71	28-94	221	10	HIGH DENSITY POLYETHYLENE	SANITARY SEWER	Active	7/11/2017	BASIN 7
1778	28-72_28-73	28-72	28-73	450	6	VITRIFIED CLAY PIPE	SANITARY SEWER	Active	1/1/1944	BASIN 7
1779	28-73_28-75	28-73	28-75	258	6	VITRIFIED CLAY PIPE	SANITARY SEWER	Active	1/1/1944	BASIN 7
1780	28-74_28-75	28-74	28-75	35	8	VITRIFIED CLAY PIPE	SANITARY SEWER	Active	1/1/1954	BASIN 7
1781	28-75_28-76	28-75	28-76	294	10	VITRIFIED CLAY PIPE	SANITARY SEWER	Active	1/1/1954	BASIN 7
1782	28-76_28-43	28-76	28-43	219	10	VITRIFIED CLAY PIPE	SANITARY SEWER	Active	1/1/1953	BASIN 7
1783	28-77_28-76	28-77	28-76	82	6	VITRIFIED CLAY PIPE	SANITARY SEWER	Active		BASIN 7
1784	28-78_28-82	28-78	28-82	68	8	VITRIFIED CLAY PIPE	SANITARY SEWER	Active	1/1/1977	BASIN 7
1785	28-79R_28-80	28-79R	28-80	395	6	VITRIFIED CLAY PIPE	SANITARY SEWER	Active	1/1/1944	BASIN 6
1786	28-8_28-9	28-8	28-9	265	8	VITRIFIED CLAY PIPE	SANITARY SEWER	Active	1/1/1948	BASIN 7
1787	28-80_28-81	28-80	28-81	440	6	VITRIFIED CLAY PIPE	SANITARY SEWER	Active	1/1/1944	BASIN 7
1788	28-81_19-101	28-81	19-101	301	6	VITRIFIED CLAY PIPE	SANITARY SEWER	Active	1/1/1944	BASIN 7
1789	28-82_28-77	28-82	28-77	272	6	VITRIFIED CLAY PIPE	SANITARY SEWER	Active	1/1/1944	BASIN 7
1790	28-83_28-60	28-83	28-60	82	10	HIGH DENSITY POLYETHYLENE	SANITARY SEWER	Active	7/26/2016	BASIN 5
1791	28-85_28-86	28-85	28-86	45	10	HIGH DENSITY POLYETHYLENE	SANITARY SEWER	Active	8/9/2016	BASIN 5
1792	28-86_28-83	28-86	28-83	235	10	HIGH DENSITY POLYETHYLENE	SANITARY SEWER	Active	7/26/2016	BASIN 5
1793	28-87_28-86	28-87	28-86	271	6	VITRIFIED CLAY PIPE	SANITARY SEWER	Active	1/1/1976	BASIN 5
1794	28-89_20-92	28-89	20-92	315	8	VITRIFIED CLAY PIPE	SANITARY SEWER	Active	1/1/1978	BASIN 6
1795	28-9_28-70	28-9	28-70	429	10	HIGH DENSITY POLYETHYLENE	SANITARY SEWER	Active	7/11/2017	BASIN 7
1796	28-91_28-35	28-91	28-35	278	8	VITRIFIED CLAY PIPE	SANITARY SEWER	Active	1/1/1984	BASIN 7
1797	28-92_28-35	28-92	28-35	282	8	VITRIFIED CLAY PIPE	SANITARY SEWER	Active	11/10/2008	BASIN 7
1798	28-93_28-92	28-93	28-92	286	8	VITRIFIED CLAY PIPE	SANITARY SEWER	Active	1/1/1988	BASIN 7
1799	28-94_28-41	28-94	28-41	569	12	VITRIFIED CLAY PIPE	SANITARY SEWER	Active	1/1/1975	BASIN 7
1800	28-94P_28-74	28-94P	28-74	129	8	VITRIFIED CLAY PIPE	SANITARY SEWER	Active	1/1/1954	BASIN 7
1801	28-95_28-78	28-95	28-78	227	8	VITRIFIED CLAY PIPE	SANITARY SEWER	Active	1/1/1977	BASIN 7
1802	28-96_29-29	28-96	29-29	362	12	VITRIFIED CLAY PIPE	SANITARY SEWER	Active	1/1/1993	BASIN 7
1803	28-97_28-96	28-97	28-96	137	8	VITRIFIED CLAY PIPE	SANITARY SEWER	Active	1/1/1993	BASIN 7
1804	28-98_29-6	28-98	29-6	175	8	VITRIFIED CLAY PIPE	SANITARY SEWER	Active	1/1/1974	BASIN 6
1805	28-99_28-98	28-99	28-98	95	8	VITRIFIED CLAY PIPE	SANITARY SEWER	Active		BASIN 6
1806	2-9_2-10	2-9	2-10	125	8	VITRIFIED CLAY PIPE	SANITARY SEWER	Active	1/1/1956	BASIN 2
1807	29-1_20-13	29-1	20-13	257	8	VITRIFIED CLAY PIPE	SANITARY SEWER	Active	1/1/1950	BASIN 6
1808	29-10_20-16	29-10	20-16	512	6	VITRIFIED CLAY PIPE	SANITARY SEWER	Active	1/1/1944	BASIN 6
1809	29-101_29-102	29-101	29-102	99	10	VITRIFIED CLAY PIPE	SANITARY SEWER	Active	1/1/1958	BASIN 8
1810	29-102_29-69	29-102	29-69	159	10	VITRIFIED CLAY PIPE	SANITARY SEWER	Active	1/1/1958	BASIN 8
1811	29-103_29-102	29-103	29-102	99	8	VITRIFIED CLAY PIPE	SANITARY SEWER	Active	1/1/1958	BASIN 8
1812	29-104_29-77	29-104	29-77	251	6	VITRIFIED CLAY PIPE	SANITARY SEWER	Active	1/1/1946	BASIN 8
1813	29-105_29-85	29-105	29-85	90	6		SANITARY SEWER	Active		BASIN 8
1814	29-106_29-97	29-106	29-97	55	12	VITRIFIED CLAY PIPE	SANITARY SEWER	Active	1/1/1966	BASIN 7
1815	29-106R_29-34R	29-106R	29-34R	81	6	VITRIFIED CLAY PIPE	TRUNK LINE	Active	4/15/1971	BASIN 7
1816	29-107R_29-8	29-107R	29-8	149	6	VITRIFIED CLAY PIPE	SANITARY SEWER	Active	1/1/1948	BASIN 6
1817	29-108_29-106	29-108	29-106	262	8	HIGH DENSITY POLYETHYLENE	SANITARY SEWER	Active	1/1/2006	BASIN 6
1818	29-109_20-14	29-109	20-14	252	8	HIGH DENSITY POLYETHYLENE	SANITARY SEWER	Active	8/11/2017	BASIN 6
1819	29-11_29-10	29-11	29-10	487	6	VITRIFIED CLAY PIPE	SANITARY SEWER	Active	1/1/1944	BASIN 6
1820	29-12_29-13	29-12	29-13	383	8	VITRIFIED CLAY PIPE	SANITARY SEWER	Active	1/1/1955	BASIN 6
1821	29-13_20-17	29-13	20-17	420	8	VITRIFIED CLAY PIPE	SANITARY SEWER	Active	1/1/1955	BASIN 6
1822	29-14R_29-16	29-14R	29-16	100	8	VITRIFIED CLAY PIPE	SANITARY SEWER	Active	1/1/1951	BASIN 6
1823	29-15R_29-16	29-15R	29-16	332	8	VITRIFIED CLAY PIPE	SANITARY SEWER	Active	1/1/1951	BASIN 6
1825	29-16_29-19	29-16	29-19	298	8	VITRIFIED CLAY PIPE	SANITARY SEWER	Active	1/1/1951	BASIN 6
1826	29-17_29-16	29-17	29-16	202	8	VITRIFIED CLAY PIPE	SANITARY SEWER	Active	1/1/1951	BASIN 6
1827	29-18R_29-17	29-18R	29-17	155	6	VITRIFIED CLAY PIPE	SANITARY SEWER	Active	1/1/1951	BASIN 6
1828	29-19_29-20	29-19	29-20	106	8	VITRIFIED CLAY PIPE	SANITARY SEWER	Active	1/1/1950	BASIN 6
1829	29-2_29-1	29-2	29-1	264	8	VITRIFIED CLAY PIPE	SANITARY SEWER	Active	1/1/1950	BASIN 6
1830	29-20_29-23	29-20	29-23	242	8	VITRIFIED CLAY PIPE	SANITARY SEWER	Active	1/1/1950	BASIN 6
1831	29-21_20-42	29-21	20-42	436	8	VITRIFIED CLAY PIPE	SANITARY SEWER	Active	1/1/1949	BASIN 6
1832	29-22_20-41	29-22	20-41	324	8	HIGH DENSITY POLYETHYLENE	SANITARY SEWER	Active	7/8/2016	BASIN 6
1833	29-23_29-22	29-23	29-22	296	8	VITRIFIED CLAY PIPE	SANITARY SEWER	Active	1/1/1950	BASIN 6
1834	29-24_29-26	29-24	29-26	237	8	VITRIFIED CLAY PIPE	SANITARY SEWER	Active	1/1/1960	BASIN 6
1835	29-25_29-26	29-25	29-26	75	8	VITRIFIED CLAY PIPE	SANITARY SEWER	Active	1/1/1960	BASIN 6
1836	29-26_29-28	29-26	29-28	275	8	VITRIFIED CLAY PIPE	SANITARY SEWER	Active	1/1/1957	BASIN 6
1837	29-27_29-28	29-27	29-28	115	8	VITRIFIED CLAY PIPE	SANITARY SEWER	Active	1/1/1957	BASIN 6
1838	29-28_30-6	29-28	30-6	272	8	VITRIFIED CLAY PIPE	SANITARY SEWER	Active	1/1/1957	BASIN 6
1839	29-29_29-30	29-29	29-30	549	12	VITRIFIED CLAY PIPE	SANITARY SEWER	Active	1/1/1944	BASIN 7
1840	29-30_29-86	29-30	29-86	517	12	VITRIFIED CLAY PIPE	SANITARY SEWER	Active	1/1/1966	BASIN 7
1841	29-31R_29-94	29-31R	29-94	30	6	VITRIFIED CLAY PIPE	SANITARY SEWER	Active		BASIN 7
1842	29-32_29-30	29-32	29-30	36	6	VITRIFIED CLAY PIPE	SANITARY SEWER	Active	1/1/1966	BASIN 7
1843	29-33_29-35	29-33	29-35	333	12	VITRIFIED CLAY PIPE	SANITARY SEWER	Active	1/1/1966	BASIN 7
1844	29-34R_29-33	29-34R	29-33	208	6	VITRIFIED CLAY PIPE	SANITARY SEWER	Active	1/1/1951	BASIN 7
1845	29-35_29-106	29-35	29-106	55	12	VITRIFIED CLAY PIPE	SANITARY SEWER	Active	1/1/1966	BASIN 7

1846	29-39_30-99	29-39	30-99	513	8	HIGH DENSITY POLYETHYLENE	SANITARY SEWER	Active	7/26/2016	BASIN 7
1847	29-3R_29-2	29-3R	29-2	130	6	VITRIFIED CLAY PIPE	SANITARY SEWER	Active	1/1/1950	BASIN 6
1848	29-4_29-2	29-4	29-2	215	8	VITRIFIED CLAY PIPE	SANITARY SEWER	Active	1/1/1950	BASIN 6
1849	29-40_29-39	29-40	29-39	208	6	VITRIFIED CLAY PIPE	SANITARY SEWER	Active	1/1/1944	BASIN 7
1850	29-41R_29-40	29-41R	29-40	184	6	VITRIFIED CLAY PIPE	SANITARY SEWER	Active	1/1/1944	BASIN 7
1851	29-42_29-40	29-42	29-40	503	6	VITRIFIED CLAY PIPE	SANITARY SEWER	Active	1/1/1944	BASIN 7
1852	29-43_29-42	29-43	29-42	500	6	VITRIFIED CLAY PIPE	SANITARY SEWER	Active	1/1/1944	BASIN 7
1853	29-44_29-43	29-44	29-43	400	6	VITRIFIED CLAY PIPE	SANITARY SEWER	Active	1/1/1944	BASIN 7
1854	29-45_29-39	29-45	29-39	154	6	VITRIFIED CLAY PIPE	SANITARY SEWER	Active	1/1/1946	BASIN 7
1855	29-46_29-45	29-46	29-45	454	6	VITRIFIED CLAY PIPE	SANITARY SEWER	Active	1/1/1946	BASIN 7
1856	29-47_29-46	29-47	29-46	403	6	VITRIFIED CLAY PIPE	SANITARY SEWER	Active	1/1/1946	BASIN 7
1857	29-48R_29-47	29-48R	29-47	132	6	VITRIFIED CLAY PIPE	SANITARY SEWER	Active	1/1/1946	BASIN 7
1858	29-49R_29-84	29-49R	29-84	160	6	VITRIFIED CLAY PIPE	SANITARY SEWER	Active	1/1/1946	BASIN 7
1859	29-50R_29-51	29-50R	29-51	80	6	VITRIFIED CLAY PIPE	SANITARY SEWER	Active	1/1/1962	BASIN 7
1860	29-51_29-84	29-51	29-84	265	6	VITRIFIED CLAY PIPE	SANITARY SEWER	Active	1/1/1962	BASIN 7
1861	29-52_29-51	29-52	29-51	304	6	VITRIFIED CLAY PIPE	SANITARY SEWER	Active	1/1/1962	BASIN 7
1862	29-53_29-52	29-53	29-52	222	6	VITRIFIED CLAY PIPE	SANITARY SEWER	Active	1/1/1980	BASIN 7
1863	29-54R_29-52	29-54R	29-52	107	6	VITRIFIED CLAY PIPE	SANITARY SEWER	Active	1/1/1962	BASIN 7
1864	29-55R_29-56	29-55R	29-56	98	6	VITRIFIED CLAY PIPE	SANITARY SEWER	Active	1/1/1946	BASIN 7
1865	29-56_29-51	29-56	29-51	291	6	VITRIFIED CLAY PIPE	SANITARY SEWER	Active	1/1/1946	BASIN 7
1866	29-57_29-56	29-57	29-56	214	6	VITRIFIED CLAY PIPE	SANITARY SEWER	Active	1/1/1948	BASIN 7
1867	29-58R_29-57	29-58R	29-57	189	6	VITRIFIED CLAY PIPE	SANITARY SEWER	Active	1/1/1950	BASIN 7
1868	29-5R_29-4	29-5R	29-4	129	6	VITRIFIED CLAY PIPE	SANITARY SEWER	Active	1/1/1950	BASIN 6
1869	29-6_29-4	29-6	29-4	388	8	VITRIFIED CLAY PIPE	SANITARY SEWER	Active	1/1/1950	BASIN 6
1870	29-60R_29-61	29-60R	29-61	61	6	VITRIFIED CLAY PIPE	SANITARY SEWER	Active	1/1/1950	BASIN 8
1871	29-61_36-2	29-61	36-2	274	6	VITRIFIED CLAY PIPE	SANITARY SEWER	Active	1/1/1944	BASIN 8
1872	29-62R_29-63WYE	29-62R	29-63WYE	36	6	VITRIFIED CLAY PIPE	SANITARY SEWER	Active	1/1/1963	BASIN 8
1873	29-63R_29-63WYE	29-63R	29-63WYE	82	6	VITRIFIED CLAY PIPE	SANITARY SEWER	Active	1/1/1963	BASIN 8
1874	29-63WYE_29-61	29-63WYE	29-61	188	6	VITRIFIED CLAY PIPE	SANITARY SEWER	Active	1/1/1963	BASIN 8
1875	29-64R_29-102	29-64R	29-102	328	6	VITRIFIED CLAY PIPE	SANITARY SEWER	Active	1/1/1944	BASIN 8
1876	29-65R_29-66	29-65R	29-66	147	8	VITRIFIED CLAY PIPE	SANITARY SEWER	Active	1/1/1958	BASIN 8
1877	29-66_29-67	29-66	29-67	196	8	VITRIFIED CLAY PIPE	SANITARY SEWER	Active	1/1/1958	BASIN 8
1878	29-67_29-70	29-67	29-70	240	10	VITRIFIED CLAY PIPE	SANITARY SEWER	Active	1/1/1958	BASIN 8
1879	29-68_29-67	29-68	29-67	51	10	VITRIFIED CLAY PIPE	SANITARY SEWER	Active	1/1/1958	BASIN 8
1880	29-69_29-68	29-69	29-68	129	10	VITRIFIED CLAY PIPE	SANITARY SEWER	Active	1/1/1958	BASIN 8
1881	29-7_29-107R	29-7	29-107R	254	6	VITRIFIED CLAY PIPE	SANITARY SEWER	Active	1/1/1948	BASIN 6
1882	29-70_29-72	29-70	29-72	50	10	VITRIFIED CLAY PIPE	SANITARY SEWER	Active	1/1/1958	BASIN 8
1883	29-71_29-70	29-71	29-70	279	8	VITRIFIED CLAY PIPE	SANITARY SEWER	Active	1/1/1952	BASIN 8
1884	29-72_29-85	29-72	29-85	252	10	VITRIFIED CLAY PIPE	SANITARY SEWER	Active	1/1/1958	BASIN 8
1885	29-74_29-105	29-74	29-105	149	6	VITRIFIED CLAY PIPE	SANITARY SEWER	Active	1/1/1950	BASIN 8
1886	29-75R_29-74	29-75R	29-74	65	6	VITRIFIED CLAY PIPE	SANITARY SEWER	Active	1/1/1950	BASIN 8
1887	29-76_29-77	29-76	29-77	145	10	VITRIFIED CLAY PIPE	SANITARY SEWER	Active	1/1/1958	BASIN 8
1888	29-77_30-102	29-77	30-102	122	10	VITRIFIED CLAY PIPE	SANITARY SEWER	Active	1/1/1958	BASIN 8
1889	29-8_29-9	29-8	29-9	433	6	VITRIFIED CLAY PIPE	SANITARY SEWER	Active	1/1/1948	BASIN 6
1890	29-80_29-77	29-80	29-77	227	6	VITRIFIED CLAY PIPE	SANITARY SEWER	Active	1/1/1946	BASIN 8
1891	29-81R_29-80	29-81R	29-80	79	6	VITRIFIED CLAY PIPE	SANITARY SEWER	Active	1/1/1946	BASIN 8
1892	29-82R_29-72	29-82R	29-72	50	6	VITRIFIED CLAY PIPE	SANITARY SEWER	Active		BASIN 8
1893	29-83_29-68	29-83	29-68	105	8	VITRIFIED CLAY PIPE	SANITARY SEWER	Active	1/1/1958	BASIN 8
1894	29-84_29-47	29-84	29-47	55	6	VITRIFIED CLAY PIPE	SANITARY SEWER	Active	1/1/1946	BASIN 7
1895	29-85_29-76	29-85	29-76	145	10	VITRIFIED CLAY PIPE	SANITARY SEWER	Active	1/1/1958	BASIN 8
1896	29-86_29-33	29-86	29-33	517	12	VITRIFIED CLAY PIPE	SANITARY SEWER	Active	1/1/1977	BASIN 7
1899	29-87_29-86	29-87	29-86	120	8	VITRIFIED CLAY PIPE	SANITARY SEWER	Active	1/1/1977	BASIN 7
1900	29-88_29-87	29-88	29-87	120	8	VITRIFIED CLAY PIPE	SANITARY SEWER	Active	1/1/1977	BASIN 7
1901	29-89_29-88	29-89	29-88	44	6	VITRIFIED CLAY PIPE	SANITARY SEWER	Active	1/1/1977	BASIN 7
1902	29-9_29-109	29-9	29-109	252	8	HIGH DENSITY POLYETHYLENE	SANITARY SEWER	Active	8/11/2017	BASIN 6
1903	29-90_29-87	29-90	29-87	70	8	VITRIFIED CLAY PIPE	SANITARY SEWER	Active	1/1/1977	BASIN 7
1904	29-91_29-92	29-91	29-92	245	8	VITRIFIED CLAY PIPE	SANITARY SEWER	Active	1/1/1986	BASIN 7
1905	29-92_29-93	29-92	29-93	115	8	VITRIFIED CLAY PIPE	SANITARY SEWER	Active	1/1/1986	BASIN 7
1906	29-93_29-94	29-93	29-94	36	6	VITRIFIED CLAY PIPE	SANITARY SEWER	Active	1/1/1986	BASIN 7
1907	29-94_29-32	29-94	29-32	187	6	VITRIFIED CLAY PIPE	SANITARY SEWER	Active	1/1/1966	BASIN 7
1908	29-94Y_29-94	29-94Y	29-94	13	6		SANITARY SEWER	Active		BASIN 7
1909	29-95_30-97	29-95	30-97	26	12	VITRIFIED CLAY PIPE	SANITARY SEWER	Active	1/1/1966	BASIN 7
1910	29-96_29-95	29-96	29-95	204	8	VITRIFIED CLAY PIPE	SANITARY SEWER	Active	1/1/1981	BASIN 7
1911	29-97_29-95	29-97	29-95	335	12	VITRIFIED CLAY PIPE	SANITARY SEWER	Active	1/1/1980	BASIN 7
1912	29-98_29-97	29-98	29-97	133	8	VITRIFIED CLAY PIPE	SANITARY SEWER	Active	1/1/1980	BASIN 7
1913	29-99_29-1	29-99	29-1	185	8	DUCTILE IRON PIPE	SANITARY SEWER	Active	1/1/1978	BASIN 6
1914	30-1_21-11	30-1	21-11	310	8	VITRIFIED CLAY PIPE	SANITARY SEWER	Active	1/1/1959	BASIN 6
1915	30-100R_29-80	30-100R	29-80	175	6	VITRIFIED CLAY PIPE	SANITARY SEWER	Active	1/1/1946	BASIN 8
1916	30-101R_30-102	30-101R	30-102	39	6	VITRIFIED CLAY PIPE	SANITARY SEWER	Active	1/1/1958	BASIN 8
1917	30-102_30-18	30-102	30-18	203	10	VITRIFIED CLAY PIPE	SANITARY SEWER	Active	1/1/1958	BASIN 8
1918	30-103R_29-104	30-103R	29-104	172	6	VITRIFIED CLAY PIPE	SANITARY SEWER	Active		BASIN 8
1919	30-104_30-105	30-104	30-105	260	24	VITRIFIED CLAY PIPE	SANITARY SEWER	Active	9/1/1999	BASIN 11
1920	30-105_30-106	30-105	30-106	390	24	VITRIFIED CLAY PIPE	SANITARY SEWER	Active	9/1/1999	BASIN 11

1921	30-106_30-58	30-106	30-58	154	24	VITRIFIED CLAY PIPE	SANITARY SEWER	Active	9/1/1999	BASIN 11
1922	30-107_30-106	30-107	30-106	92	8	VITRIFIED CLAY PIPE	SANITARY SEWER	Active	9/1/1999	BASIN 11
1924	30-107_30-90	30-107	30-90	20	8		SANITARY SEWER	Active		BASIN 11
1925	30-109_30-85	30-109	30-85	485	18	VITRIFIED CLAY PIPE	SANITARY SEWER	Active	1/1/1982	BASIN 11
1926	30-10R_30-126	30-10R	30-126	317	8	VITRIFIED CLAY PIPE	SANITARY SEWER	Active	1/1/1951	BASIN 7
1927	30-110_30-86	30-110	30-86	378	12	VITRIFIED CLAY PIPE	SANITARY SEWER	Active	1/1/1982	BASIN 11
1928	30-112_30-94	30-112	30-94	65	15	VITRIFIED CLAY PIPE	SANITARY SEWER	Active	1/1/1966	BASIN 7
1929	30-113_30-44	30-113	30-44	58	6	VITRIFIED CLAY PIPE	SANITARY SEWER	Active		BASIN 11
1930	30-114_30-80	30-114	30-80	305	15	VITRIFIED CLAY PIPE	SANITARY SEWER	Active	1/1/1966	BASIN 7
1931	30-115_30-114	30-115	30-114	115	8	CAST IRON PIPE	TRUNK LINE	Active	7/1/2008	BASIN 7
1932	30-116_30-115	30-116	30-115	54	8	CAST IRON PIPE	TRUNK LINE	Active	7/1/2008	BASIN 7
1933	30-117_30-116	30-117	30-116	29	8	CAST IRON PIPE	TRUNK LINE	Active	7/1/2008	BASIN 7
1934	30-118_30-117	30-118	30-117	137	8	CAST IRON PIPE	TRUNK LINE	Active	7/1/2008	BASIN 7
1935	30-119_30-118	30-119	30-118	55	8	CAST IRON PIPE	TRUNK LINE	Active	7/1/2008	BASIN 7
1936	30-12_30-127	30-12	30-127	43	12	HIGH DENSITY POLYETHYLENE	SANITARY SEWER	Active	1/1/1973	BASIN 8
1937	30-120_30-118	30-120	30-118	61	8	CAST IRON PIPE	TRUNK LINE	Active	7/1/2008	BASIN 7
1938	30-121_30-122	30-121	30-122	228	8	CAST IRON PIPE	TRUNK LINE	Active	7/1/2008	BASIN 7
1939	30-122_30-117	30-122	30-117	86	8	CAST IRON PIPE	TRUNK LINE	Active	7/1/2008	BASIN 7
1940	30-123_30-84	30-123	30-84	205	18	VITRIFIED CLAY PIPE	SANITARY SEWER	Active	1/1/1982	BASIN 11
1941	30-124_30-112	30-124	30-112	180	8	VITRIFIED CLAY PIPE	SANITARY SEWER	Active	12/30/2005	BASIN 7
1942	30-125_30-124	30-125	30-124	112	8	VITRIFIED CLAY PIPE	SANITARY SEWER	Active	12/30/2005	BASIN 7
1943	30-126_30-127	30-126	30-127	100	8	HIGH DENSITY POLYETHYLENE	SANITARY SEWER	Active	1/1/1951	BASIN 7
1944	30-127_30-25	30-127	30-25	151	12	HIGH DENSITY POLYETHYLENE	SANITARY SEWER	Active	1/1/1973	BASIN 8
1945	30-13_30-12	30-13	30-12	140	8	HIGH DENSITY POLYETHYLENE	SANITARY SEWER	Active	11/21/2019	BASIN 7
1946	30-14R_30-15	30-14R	30-15	227	8	VITRIFIED CLAY PIPE	SANITARY SEWER	Active	1/1/1957	BASIN 8
1947	30-15_30-16	30-15	30-16	127	8	VITRIFIED CLAY PIPE	SANITARY SEWER	Active	1/1/1957	BASIN 8
1948	30-16_30-21	30-16	30-21	110	12	HIGH DENSITY POLYETHYLENE	SANITARY SEWER	Active	1/1/1953	BASIN 8
1949	30-17_30-16	30-17	30-16	155	12	HIGH DENSITY POLYETHYLENE	SANITARY SEWER	Active	1/1/1953	BASIN 8
1950	30-18_30-17	30-18	30-17	148	12	HIGH DENSITY POLYETHYLENE	SANITARY SEWER	Active	1/1/1953	BASIN 8
1951	30-19_30-20	30-19	30-20	158	8	VITRIFIED CLAY PIPE	SANITARY SEWER	Active	1/1/1957	BASIN 8
1952	30-2_30-1	30-2	30-1	75	8	VITRIFIED CLAY PIPE	SANITARY SEWER	Active	1/1/1959	BASIN 6
1953	30-20_30-16	30-20	30-16	354	8	VITRIFIED CLAY PIPE	SANITARY SEWER	Active	1/1/1957	BASIN 8
1954	30-21_30-12	30-21	30-12	250	12	HIGH DENSITY POLYETHYLENE	SANITARY SEWER	Active	1/1/1953	BASIN 8
1955	30-22_30-23	30-22	30-23	302	6	VITRIFIED CLAY PIPE	SANITARY SEWER	Active	1/1/1946	BASIN 8
1956	30-23_30-24	30-23	30-24	302	6	VITRIFIED CLAY PIPE	SANITARY SEWER	Active	1/1/1946	BASIN 8
1957	30-24_30-25	30-24	30-25	102	6	VITRIFIED CLAY PIPE	SANITARY SEWER	Active	1/1/1973	BASIN 8
1958	30-25_30-26	30-25	30-26	144	12	HIGH DENSITY POLYETHYLENE	SANITARY SEWER	Active	1/1/1973	BASIN 8
1959	30-26_30-28	30-26	30-28	127	12	HIGH DENSITY POLYETHYLENE	SANITARY SEWER	Active		BASIN 8
1960	30-28_30-40	30-28	30-40	169	12	HIGH DENSITY POLYETHYLENE	SANITARY SEWER	Active		BASIN 8
1961	30-29_30-28	30-29	30-28	72	8	VITRIFIED CLAY PIPE	SANITARY SEWER	Active	1/1/1952	BASIN 8
1962	30-3_29-23	30-3	29-23	205	6	VITRIFIED CLAY PIPE	SANITARY SEWER	Active	1/1/1950	BASIN 6
1963	30-30_30-29	30-30	30-29	150	8	VITRIFIED CLAY PIPE	SANITARY SEWER	Active	1/1/1952	BASIN 8
1964	30-31_30-30	30-31	30-30	270	8	VITRIFIED CLAY PIPE	SANITARY SEWER	Active	1/1/1952	BASIN 8
1965	30-32_30-31	30-32	30-31	265	8	VITRIFIED CLAY PIPE	SANITARY SEWER	Active	1/1/1952	BASIN 8
1966	30-33R_30-32	30-33R	30-32	60	8	VITRIFIED CLAY PIPE	SANITARY SEWER	Active	1/1/1952	BASIN 8
1967	30-34R_30-35	30-34R	30-35	60	8	VITRIFIED CLAY PIPE	SANITARY SEWER	Active	1/1/1952	BASIN 11
1968	30-35_30-36	30-35	30-36	380	8	VITRIFIED CLAY PIPE	SANITARY SEWER	Active	1/1/1952	BASIN 11
1969	30-36_30-37	30-36	30-37	380	8	VITRIFIED CLAY PIPE	SANITARY SEWER	Active	1/1/1952	BASIN 11
1970	30-37_30-42	30-37	30-42	298	15	VITRIFIED CLAY PIPE	SANITARY SEWER	Active	1/1/1964	BASIN 11
1971	30-38_30-37	30-38	30-37	53	15	VITRIFIED CLAY PIPE	SANITARY SEWER	Active	1/1/1964	BASIN 11
1972	30-39_30-41	30-39	30-41	337	12	HIGH DENSITY POLYETHYLENE	SANITARY SEWER	Active	1/1/1953	BASIN 7
1973	30-40_30-39	30-40	30-39	8	12	HIGH DENSITY POLYETHYLENE	SANITARY SEWER	Active	7/9/2019	BASIN 7
1974	30-41_30-80	30-41	30-80	446	12	HIGH DENSITY POLYETHYLENE	SANITARY SEWER	Active	1/1/1953	BASIN 7
1975	30-42_30-45	30-42	30-45	399	15	VITRIFIED CLAY PIPE	SANITARY SEWER	Active	1/1/1964	BASIN 11
1976	30-43_30-42	30-43	30-42	260	12	VITRIFIED CLAY PIPE	SANITARY SEWER	Active	1/1/1964	BASIN 11
1977	30-44_30-50	30-44	30-50	455	6	VITRIFIED CLAY PIPE	SANITARY SEWER	Active	1/1/1944	BASIN 11
1978	30-45_30-46	30-45	30-46	149	15	VITRIFIED CLAY PIPE	SANITARY SEWER	Active	1/1/1964	BASIN 11
1979	30-46_30-47	30-46	30-47	30	15	VITRIFIED CLAY PIPE	SANITARY SEWER	Active	1/1/1964	BASIN 11
1980	30-47_30-48	30-47	30-48	10	10	VITRIFIED CLAY PIPE	OVERFLOW	Active		BASIN 11
1981	30-47_30-49	30-47	30-49	85	10	VITRIFIED CLAY PIPE	SANITARY SEWER	Active	1/1/1954	BASIN 11
1982	30-48_30-50	30-48	30-50	85	12	VITRIFIED CLAY PIPE	SANITARY SEWER	Active	1/1/1954	BASIN 11
1983	30-49_30-52	30-49	30-52	390	10	VITRIFIED CLAY PIPE	SANITARY SEWER	Active	1/1/1954	BASIN 11
1984	30-4R_30-71	30-4R	30-71	182	8	VITRIFIED CLAY PIPE	SANITARY SEWER	Active	1/1/1954	BASIN 6
1985	30-5_30-72	30-5	30-72	219	8	VITRIFIED CLAY PIPE	SANITARY SEWER	Active	1/1/1957	BASIN 6
1986	30-50_30-51	30-50	30-51	390	12	VITRIFIED CLAY PIPE	SANITARY SEWER	Active	1/1/1954	BASIN 11
1987	30-51_31-7	30-51	31-7	304	12	VITRIFIED CLAY PIPE	SANITARY SEWER	Active	1/1/1944	BASIN 11
1988	30-52_31-6	30-52	31-6	304	10	VITRIFIED CLAY PIPE	SANITARY SEWER	Active		BASIN 11
1989	30-53_30-47	30-53	30-47	199	12	VITRIFIED CLAY PIPE	OVERFLOW	Active		BASIN 11
1990	30-54_30-47	30-54	30-47	199	10	VITRIFIED CLAY PIPE	SANITARY SEWER	Active		BASIN 11
1991	30-54_30-53	30-54	30-53	199	15	VITRIFIED CLAY PIPE	OVERFLOW	Active		BASIN 11
1992	30-54_30-55	30-54	30-55	87	21	VITRIFIED CLAY PIPE	SANITARY SEWER	Active	1/1/1966	BASIN 11
1993	30-55_30-104	30-55	30-104	544	21	VITRIFIED CLAY PIPE	SANITARY SEWER	Active	1/1/1966	BASIN 11
1994	30-55_30-49	30-55	30-49	240	6	VITRIFIED CLAY PIPE	SANITARY SEWER	Active	1/1/1944	BASIN 11

1995	30-58_31-3	30-58	31-3	121	21	VITRIFIED CLAY PIPE	SANITARY SEWER	Active	1/1/1966	BASIN 11
1996	30-59_30-55	30-59	30-55	135	6	VITRIFIED CLAY PIPE	SANITARY SEWER	Active	1/1/1944	BASIN 11
1997	30-6_30-5	30-6	30-5	197	8	VITRIFIED CLAY PIPE	SANITARY SEWER	Active	1/1/1957	BASIN 6
2000	30-61_30-59	30-61	30-59	290	6	VITRIFIED CLAY PIPE	SANITARY SEWER	Active	1/1/1944	BASIN 11
2001	30-62_30-93	30-62	30-93	22	8	VITRIFIED CLAY PIPE	SANITARY SEWER	Active	1/1/1944	BASIN 6
2002	30-63_30-62	30-63	30-62	170	8	VITRIFIED CLAY PIPE	SANITARY SEWER	Active	1/1/1944	BASIN 6
2003	30-64R_30-61	30-64R	30-61	490	6	VITRIFIED CLAY PIPE	SANITARY SEWER	Active	1/1/1944	BASIN 11
2004	30-65_21-23	30-65	21-23	341	6	HIGH DENSITY POLYETHYLENE	SANITARY SEWER	Active	12/22/2020	BASIN 11
2005	30-66_21-20	30-66	21-20	336	6	VITRIFIED CLAY PIPE	SANITARY SEWER	Active	1/1/1944	BASIN 11
2006	30-67_30-68	30-67	30-68	336	8	VITRIFIED CLAY PIPE	SANITARY SEWER	Active	1/1/1962	BASIN 6
2007	30-68_30-63	30-68	30-63	570	8	VITRIFIED CLAY PIPE	SANITARY SEWER	Active	1/1/1944	BASIN 6
2008	30-69_30-68	30-69	30-68	389	8	VITRIFIED CLAY PIPE	SANITARY SEWER	Active	1/1/1954	BASIN 6
2009	30-70_30-69	30-70	30-69	82	8	VITRIFIED CLAY PIPE	SANITARY SEWER	Active	1/1/1954	BASIN 6
2010	30-71_30-70	30-71	30-70	245	8	VITRIFIED CLAY PIPE	SANITARY SEWER	Active	1/1/1954	BASIN 6
2011	30-72_30-83	30-72	30-83	276	8	VITRIFIED CLAY PIPE	SANITARY SEWER	Active	1/1/1957	BASIN 6
2012	30-73_30-72	30-73	30-72	123	8	VITRIFIED CLAY PIPE	SANITARY SEWER	Active	1/1/1957	BASIN 6
2013	30-74_30-73	30-74	30-73	123	8	VITRIFIED CLAY PIPE	SANITARY SEWER	Active	1/1/1957	BASIN 6
2014	30-75R_30-74	30-75R	30-74	50	8	VITRIFIED CLAY PIPE	SANITARY SEWER	Active	1/1/1957	BASIN 6
2015	30-76R_30-77	30-76R	30-77	400	6	HIGH DENSITY POLYETHYLENE	SANITARY SEWER	Active	9/1/2005	BASIN 7
2016	30-77_30-78	30-77	30-78	93	15	VITRIFIED CLAY PIPE	SANITARY SEWER	Active	1/1/1966	BASIN 7
2017	30-78_30-114	30-78	30-114	305	15	VITRIFIED CLAY PIPE	SANITARY SEWER	Active	1/1/1966	BASIN 7
2018	30-79R_30-78	30-79R	30-78	360	6	VITRIFIED CLAY PIPE	SANITARY SEWER	Active	1/1/1966	BASIN 7
2019	30-7R_30-74	30-7R	30-74	178	8	VITRIFIED CLAY PIPE	SANITARY SEWER	Active	1/1/1957	BASIN 6
2020	30-8_30-77	30-8	30-77	229	15	VITRIFIED CLAY PIPE	SANITARY SEWER	Active	1/1/1966	BASIN 7
2021	30-80_30-54	30-80	30-54	295	15	VITRIFIED CLAY PIPE	SANITARY SEWER	Active	1/1/1953	BASIN 7
2022	30-81_30-63	30-81	30-63	315	8	VITRIFIED CLAY PIPE	SANITARY SEWER	Active	1/1/1954	BASIN 6
2023	30-82_30-81	30-82	30-81	120	8	VITRIFIED CLAY PIPE	SANITARY SEWER	Active	1/1/1954	BASIN 6
2024	30-83_30-82	30-83	30-82	120	8	VITRIFIED CLAY PIPE	SANITARY SEWER	Active	1/1/1957	BASIN 6
2025	30-84_30-43	30-84	30-43	58	18	VITRIFIED CLAY PIPE	SANITARY SEWER	Active	1/1/1982	BASIN 11
2026	30-85_30-123	30-85	30-123	205	18	VITRIFIED CLAY PIPE	SANITARY SEWER	Active	1/1/1982	BASIN 11
2027	30-86_30-43	30-86	30-43	447	12	VITRIFIED CLAY PIPE	SANITARY SEWER	Active	1/1/1964	BASIN 11
2028	30-87_30-88	30-87	30-88	193	8	VITRIFIED CLAY PIPE	SANITARY SEWER	Active	1/1/1983	BASIN 11
2029	30-88_30-89	30-88	30-89	64	8	VITRIFIED CLAY PIPE	SANITARY SEWER	Active	1/1/1983	BASIN 11
2030	30-89_30-107	30-89	30-107	154	8	VITRIFIED CLAY PIPE	SANITARY SEWER	Active	1/1/1983	BASIN 11
2031	30-90_30-58	30-90	30-58	92	8	VITRIFIED CLAY PIPE	SANITARY SEWER	Active	1/1/1983	BASIN 11
2032	30-91_30-92	30-91	30-92	196	8	VITRIFIED CLAY PIPE	SANITARY SEWER	Active	1/1/1990	BASIN 6
2033	30-91R_30-59	30-91R	30-59	480	4	VITRIFIED CLAY PIPE	SANITARY SEWER	Active	1/1/1944	BASIN 11
2034	30-92_30-93	30-92	30-93	196	8	VITRIFIED CLAY PIPE	SANITARY SEWER	Active	1/1/1990	BASIN 6
2035	30-93_30-54	30-93	30-54	466	8	VITRIFIED CLAY PIPE	SANITARY SEWER	Active	1/1/1944	BASIN 6
2036	30-94_30-8	30-94	30-8	65	15	VITRIFIED CLAY PIPE	SANITARY SEWER	Active	1/1/1992	BASIN 7
2037	30-95_30-94	30-95	30-94	145	8	VITRIFIED CLAY PIPE	SANITARY SEWER	Active	1/1/1992	BASIN 7
2038	30-96_30-95	30-96	30-95	210	8	DUCTILE IRON PIPE	SANITARY SEWER	Active	1/1/1992	BASIN 7
2039	30-97_30-112	30-97	30-112	198	15	VITRIFIED CLAY PIPE	SANITARY SEWER	Active	1/1/1966	BASIN 7
2040	30-98_30-97	30-98	30-97	240	6	VITRIFIED CLAY PIPE	SANITARY SEWER	Active	1/1/1944	BASIN 7
2041	30-99_30-98	30-99	30-98	123	8	HIGH DENSITY POLYETHYLENE	SANITARY SEWER	Active	7/29/2016	BASIN 7
2042	30-9R_30-8	30-9R	30-8	150	6	VITRIFIED CLAY PIPE	SANITARY SEWER	Active	1/1/1966	BASIN 7
2043	3-10_3-9	3-10	3-9	179	8	VITRIFIED CLAY PIPE	SANITARY SEWER	Active	1/1/1956	BASIN 1
2044	31-1_22-9	31-1	22-9	128	15	VITRIFIED CLAY PIPE	SANITARY SEWER	Active	1/1/1954	BASIN 11
2045	3-11_3-10	3-11	3-10	108	8	VITRIFIED CLAY PIPE	SANITARY SEWER	Active	1/1/1956	BASIN 1
2046	31-10_31-114	31-10	31-114	55	8	VITRIFIED CLAY PIPE	SANITARY SEWER	Active	1/1/1982	BASIN 11
2047	31-100_32-4	31-100	32-4	315	6	VITRIFIED CLAY PIPE	SANITARY SEWER	Active	1/1/1948	BASIN 10
2048	31-101_31-100	31-101	31-100	316	6	VITRIFIED CLAY PIPE	SANITARY SEWER	Active	1/1/1948	BASIN 10
2049	31-102R_31-101	31-102R	31-101	242	6	VITRIFIED CLAY PIPE	SANITARY SEWER	Active	1/1/1948	BASIN 10
2050	31-103_31-100	31-103	31-100	320	8	VITRIFIED CLAY PIPE	SANITARY SEWER	Active	10/16/2019	BASIN 10
2051	31-104_32-7	31-104	32-7	159	8	VITRIFIED CLAY PIPE	SANITARY SEWER	Active	9/28/1953	BASIN 10
2052	31-105_31-90	31-105	31-90	184	8	VITRIFIED CLAY PIPE	SANITARY SEWER	Active	1/1/1949	BASIN 10
2053	31-106_31-8	31-106	31-8	235	8	VITRIFIED CLAY PIPE	SANITARY SEWER	Active	1/1/1954	BASIN 11
2054	31-107_31-109	31-107	31-109	80	8	VITRIFIED CLAY PIPE	SANITARY SEWER	Active		BASIN 11
2055	31-108_31-92	31-108	31-92	161	6	VITRIFIED CLAY PIPE	SANITARY SEWER	Active	1/1/1948	BASIN 10
2056	31-109_31-112	31-109	31-112	92	8	VITRIFIED CLAY PIPE	SANITARY SEWER	Active		BASIN 11
2057	31-110_31-111	31-110	31-111	120	8	VITRIFIED CLAY PIPE	SANITARY SEWER	Active	1/1/1978	BASIN 11
2058	31-111_31-109	31-111	31-109	203	8	VITRIFIED CLAY PIPE	SANITARY SEWER	Active	1/1/1978	BASIN 11
2059	31-112_31-28	31-112	31-28	40	8	VITRIFIED CLAY PIPE	SANITARY SEWER	Active	1/1/1978	BASIN 11
2060	31-113_31-109	31-113	31-109	80	8	VITRIFIED CLAY PIPE	SANITARY SEWER	Active	1/1/1978	BASIN 11
2061	31-114_31-9	31-114	31-9	55	8	VITRIFIED CLAY PIPE	SANITARY SEWER	Active	1/1/1981	BASIN 11
2062	31-115_31-10	31-115	31-10	238	8	VITRIFIED CLAY PIPE	SANITARY SEWER	Active	1/1/1981	BASIN 11
2063	31-116_31-115	31-116	31-115	244	8	VITRIFIED CLAY PIPE	SANITARY SEWER	Active	1/1/1981	BASIN 11
2064	31-117R_31-80	31-117R	31-80	252	8	VITRIFIED CLAY PIPE	SANITARY SEWER	Active	1/1/1949	BASIN 10
2065	31-118_31-67	31-118	31-67	229	6	VITRIFIED CLAY PIPE	SANITARY SEWER	Active		BASIN 10
2066	31-119_31-118	31-119	31-118	320	8	VITRIFIED CLAY PIPE	TRUNK LINE	Active	9/12/2006	BASIN 10
2067	31-11R_31-106	31-11R	31-106	26	6	VITRIFIED CLAY PIPE	SANITARY SEWER	Active	1/1/1954	BASIN 11
2068	31-12_31-106	31-12	31-106	91	8	VITRIFIED CLAY PIPE	SANITARY SEWER	Active	1/1/1954	BASIN 11
2069	31-120_31-119	31-120	31-119	20	8	DUCTILE IRON PIPE	SANITARY SEWER	Active		BASIN 10

2070	31-121_31-120	31-121	31-120	101	8	DUCTILE IRON PIPE	SANITARY SEWER	Active		BASIN 10
2071	31-13_31-14	31-13	31-14	272	6	VITRIFIED CLAY PIPE	SANITARY SEWER	Active	1/1/1947	BASIN 11
2072	31-14_31-16	31-14	31-16	152	6	VITRIFIED CLAY PIPE	SANITARY SEWER	Active	1/1/1947	BASIN 11
2073	31-15R_31-14	31-15R	31-14	70	6	VITRIFIED CLAY PIPE	SANITARY SEWER	Active	1/1/1947	BASIN 11
2074	31-16_31-4	31-16	31-4	97	8	VITRIFIED CLAY PIPE	SANITARY SEWER	Active	1/1/1954	BASIN 11
2075	31-2_22-8	31-2	22-8	270	21	VITRIFIED CLAY PIPE	SANITARY SEWER	Active	1/1/1966	BASIN 11
2076	31-22R_31-23	31-22R	31-23	99	8	VITRIFIED CLAY PIPE	SANITARY SEWER	Active	1/1/1955	BASIN 11
2077	31-23_31-24	31-23	31-24	392	8	VITRIFIED CLAY PIPE	SANITARY SEWER	Active	1/1/1955	BASIN 11
2078	31-24_31-25	31-24	31-25	326	8	VITRIFIED CLAY PIPE	SANITARY SEWER	Active	1/1/1954	BASIN 11
2079	31-25_31-29	31-25	31-29	274	8	VITRIFIED CLAY PIPE	SANITARY SEWER	Active	1/1/1954	BASIN 11
2080	31-26_31-25	31-26	31-25	159	8	VITRIFIED CLAY PIPE	SANITARY SEWER	Active	1/1/1958	BASIN 11
2081	31-27_31-26	31-27	31-26	97	8	VITRIFIED CLAY PIPE	SANITARY SEWER	Active	1/1/1958	BASIN 11
2082	31-28_31-27	31-28	31-27	200	8	VITRIFIED CLAY PIPE	SANITARY SEWER	Active	1/1/1958	BASIN 11
2083	31-29_31-33	31-29	31-33	322	8	VITRIFIED CLAY PIPE	SANITARY SEWER	Active	1/1/1954	BASIN 11
2084	3-12R_3-11	3-12R	3-11	207	8	VITRIFIED CLAY PIPE	SANITARY SEWER	Active	1/1/1956	BASIN 1
2085	31-3_31-2	31-3	31-2	255	21	VITRIFIED CLAY PIPE	SANITARY SEWER	Active	1/1/1966	BASIN 11
2086	31-30_31-29	31-30	31-29	175	8	VITRIFIED CLAY PIPE	SANITARY SEWER	Active	1/1/1959	BASIN 11
2087	31-31R_31-30	31-31R	31-30	175	8	VITRIFIED CLAY PIPE	SANITARY SEWER	Active	1/1/1959	BASIN 11
2088	31-32_31-33	31-32	31-33	149	8	VITRIFIED CLAY PIPE	SANITARY SEWER	Active	1/1/1954	BASIN 11
2089	31-33_31-34	31-33	31-34	365	8	VITRIFIED CLAY PIPE	SANITARY SEWER	Active	1/1/1982	BASIN 11
2090	31-34_31-10	31-34	31-10	280	8	VITRIFIED CLAY PIPE	SANITARY SEWER	Active	1/1/1982	BASIN 11
2091	31-35_31-34	31-35	31-34	205	8	VITRIFIED CLAY PIPE	SANITARY SEWER	Active	1/1/1982	BASIN 11
2092	31-36_31-35	31-36	31-35	225	8	VITRIFIED CLAY PIPE	SANITARY SEWER	Active	1/1/1954	BASIN 11
2093	31-37_31-36	31-37	31-36	120	8	VITRIFIED CLAY PIPE	SANITARY SEWER	Active	1/1/1966	BASIN 11
2094	3-13R_3-14	3-13R	3-14	167	8	VITRIFIED CLAY PIPE	SANITARY SEWER	Active	1/1/1959	BASIN 2
2095	31-4_31-1	31-4	31-1	379	15	VITRIFIED CLAY PIPE	SANITARY SEWER	Active	1/1/1954	BASIN 11
2096	3-14_3-15	3-14	3-15	291	8	VITRIFIED CLAY PIPE	SANITARY SEWER	Active	1/1/1959	BASIN 2
2097	31-43_22-138	31-43	22-138	349	8	VITRIFIED CLAY PIPE	SANITARY SEWER	Active	1/1/1948	BASIN 10
2098	31-44_31-43	31-44	31-43	270	8	VITRIFIED CLAY PIPE	SANITARY SEWER	Active	1/1/1948	BASIN 10
2099	31-45_31-91	31-45	31-91	286	6	VITRIFIED CLAY PIPE	SANITARY SEWER	Active		BASIN 10
2100	31-46_31-45	31-46	31-45	50	8	VITRIFIED CLAY PIPE	SANITARY SEWER	Active	12/18/1948	BASIN 10
2101	31-47_31-46	31-47	31-46	186	8	VITRIFIED CLAY PIPE	SANITARY SEWER	Active	1/1/1948	BASIN 10
2102	31-48R_31-78	31-48R	31-78	187	8	VITRIFIED CLAY PIPE	SANITARY SEWER	Active	1/1/1949	BASIN 10
2103	31-49_31-35	31-49	31-35	167	8	VITRIFIED CLAY PIPE	SANITARY SEWER	Active	1/1/1954	BASIN 11
2104	31-5_31-4	31-5	31-4	512	15	VITRIFIED CLAY PIPE	SANITARY SEWER	Active	1/1/1954	BASIN 11
2105	3-15_3-18	3-15	3-18	164	8	VITRIFIED CLAY PIPE	SANITARY SEWER	Active	1/1/1959	BASIN 2
2106	31-50_31-49	31-50	31-49	136	8	VITRIFIED CLAY PIPE	SANITARY SEWER	Active	1/1/1982	BASIN 11
2107	31-51_31-50	31-51	31-50	91	6	VITRIFIED CLAY PIPE	SANITARY SEWER	Active	1/1/1946	BASIN 11
2108	31-52_31-51	31-52	31-51	185	6	VITRIFIED CLAY PIPE	SANITARY SEWER	Active	1/1/1946	BASIN 11
2109	31-53_31-52	31-53	31-52	115	6	VITRIFIED CLAY PIPE	SANITARY SEWER	Active	1/1/1946	BASIN 11
2110	31-54_31-32	31-54	31-32	337	8	VITRIFIED CLAY PIPE	SANITARY SEWER	Active	1/1/1954	BASIN 11
2111	31-55_31-54	31-55	31-54	150	8	VITRIFIED CLAY PIPE	SANITARY SEWER	Active	1/1/1954	BASIN 11
2112	31-56R_31-55	31-56R	31-55	230	8	VITRIFIED CLAY PIPE	SANITARY SEWER	Active	1/1/1954	BASIN 11
2113	31-57R_31-58	31-57R	31-58	91	8	VITRIFIED CLAY PIPE	SANITARY SEWER	Active	1/1/1954	BASIN 10
2114	31-58_31-67	31-58	31-67	234	8	VITRIFIED CLAY PIPE	SANITARY SEWER	Active	1/1/1954	BASIN 10
2115	31-59_31-60	31-59	31-60	79	6	VITRIFIED CLAY PIPE	SANITARY SEWER	Active	1/1/1968	BASIN 10
2116	31-6_31-5	31-6	31-5	114	15	VITRIFIED CLAY PIPE	SANITARY SEWER	Active	1/1/1954	BASIN 11
2117	3-16_4-15	3-16	4-15	178	8	VITRIFIED CLAY PIPE	SANITARY SEWER	Active	1/1/1959	BASIN 2
2118	31-60_31-118	31-60	31-118	100	6	VITRIFIED CLAY PIPE	SANITARY SEWER	Active		BASIN 10
2119	31-63_31-64	31-63	31-64	260	8	VITRIFIED CLAY PIPE	SANITARY SEWER	Active	1/1/1953	BASIN 10
2120	31-64_32-12	31-64	32-12	160	8	VITRIFIED CLAY PIPE	SANITARY SEWER	Active	1/1/1953	BASIN 10
2121	31-66_31-64	31-66	31-64	360	8	VITRIFIED CLAY PIPE	SANITARY SEWER	Active	1/1/1953	BASIN 10
2122	31-67_31-68	31-67	31-68	84	8	VITRIFIED CLAY PIPE	SANITARY SEWER	Active	1/1/1954	BASIN 10
2123	31-68_31-74	31-68	31-74	286	8	VITRIFIED CLAY PIPE	SANITARY SEWER	Active	1/1/1954	BASIN 10
2124	31-69R_31-70	31-69R	31-70	200	6	VITRIFIED CLAY PIPE	SANITARY SEWER	Active		BASIN 10
2126	31-7_31-6	31-7	31-6	113	12	VITRIFIED CLAY PIPE	SANITARY SEWER	Active	1/1/1954	BASIN 11
2127	3-17_3-16	3-17	3-16	123	8	VITRIFIED CLAY PIPE	SANITARY SEWER	Active	1/1/1959	BASIN 2
2128	31-70_32-15	31-70	32-15	214	6	VITRIFIED CLAY PIPE	SANITARY SEWER	Active	1/1/1944	BASIN 10
2129	31-71R_32-18	31-71R	32-18	458	6	VITRIFIED CLAY PIPE	SANITARY SEWER	Active	5/1/1944	BASIN 10
2130	31-72_32-9	31-72	32-9	300	6	VITRIFIED CLAY PIPE	SANITARY SEWER	Active	1/1/1946	BASIN 10
2131	31-73_31-72	31-73	31-72	89	6	VITRIFIED CLAY PIPE	SANITARY SEWER	Active	1/1/1946	BASIN 10
2132	31-74_31-73	31-74	31-73	235	8	VITRIFIED CLAY PIPE	SANITARY SEWER	Active	1/1/1946	BASIN 10
2133	31-75_31-53	31-75	31-53	418	8	VITRIFIED CLAY PIPE	SANITARY SEWER	Active	1/1/1946	BASIN 11
2135	31-75_31-74	31-75	31-74	483	6	VITRIFIED CLAY PIPE	SANITARY SEWER	Active	1/1/1946	BASIN 10
2136	31-76_31-72	31-76	31-72	441	6	VITRIFIED CLAY PIPE	SANITARY SEWER	Active	1/1/1946	BASIN 10
2137	31-76_31-77	31-76	31-77	420	6	VITRIFIED CLAY PIPE	SANITARY SEWER	Active	1/1/1946	BASIN 11
2138	31-77_31-51	31-77	31-51	133	6	VITRIFIED CLAY PIPE	SANITARY SEWER	Active	1/1/1946	BASIN 11
2139	31-78_31-79	31-78	31-79	235	8	VITRIFIED CLAY PIPE	SANITARY SEWER	Active	1/1/1949	BASIN 10
2140	31-79_31-85	31-79	31-85	239	8	VITRIFIED CLAY PIPE	SANITARY SEWER	Active	1/1/1949	BASIN 10
2141	31-8_31-7	31-8	31-7	113	8	VITRIFIED CLAY PIPE	SANITARY SEWER	Active	1/1/1954	BASIN 11
2142	3-18_3-17	3-18	3-17	80	8	VITRIFIED CLAY PIPE	SANITARY SEWER	Active	1/1/1959	BASIN 2
2143	31-80_31-79	31-80	31-79	385	8	VITRIFIED CLAY PIPE	SANITARY SEWER	Active	1/1/1949	BASIN 10
2144	31-81R_31-82	31-81R	31-82	118	6	VITRIFIED CLAY PIPE	SANITARY SEWER	Active	1/1/1949	BASIN 10

2145	31-82_31-84	31-82	31-84	258	8	VITRIFIED CLAY PIPE	SANITARY SEWER	Active	1/1/1949	BASIN 10
2146	31-83R_31-84	31-83R	31-84	118	6	VITRIFIED CLAY PIPE	SANITARY SEWER	Active	1/1/1949	BASIN 10
2147	31-84_31-85	31-84	31-85	252	8	HIGH DENSITY POLYETHYLENE	SANITARY SEWER	Active	3/12/2014	BASIN 10
2148	31-85_31-87	31-85	31-87	87	8	VITRIFIED CLAY PIPE	SANITARY SEWER	Active	1/1/1949	BASIN 10
2149	31-86R_31-87	31-86R	31-87	87	8	VITRIFIED CLAY PIPE	SANITARY SEWER	Active	1/1/1949	BASIN 10
2150	31-87_31-88	31-87	31-88	87	8	VITRIFIED CLAY PIPE	SANITARY SEWER	Active	1/1/1949	BASIN 10
2151	31-88_31-105	31-88	31-105	81	8	VITRIFIED CLAY PIPE	SANITARY SEWER	Active	1/1/1949	BASIN 10
2152	31-89_31-105	31-89	31-105	51	8	VITRIFIED CLAY PIPE	SANITARY SEWER	Active	1/1/1949	BASIN 10
2153	31-9_31-8	31-9	31-8	113	8	VITRIFIED CLAY PIPE	SANITARY SEWER	Active	1/1/1981	BASIN 11
2154	3-19_3-18	3-19	3-18	236	8	VITRIFIED CLAY PIPE	SANITARY SEWER	Active	1/1/1959	BASIN 2
2155	31-90_31-91	31-90	31-91	67	6	VITRIFIED CLAY PIPE	SANITARY SEWER	Active		BASIN 10
2156	31-91_31-108	31-91	31-108	55	6	VITRIFIED CLAY PIPE	SANITARY SEWER	Active		BASIN 10
2157	31-92_22-137	31-92	22-137	275	6	VITRIFIED CLAY PIPE	SANITARY SEWER	Active	1/1/1948	BASIN 10
2158	31-99R_22-136	31-99R	22-136	195	6	VITRIFIED CLAY PIPE	SANITARY SEWER	Active	1/1/1948	BASIN 10
2159	3-2_3-3	3-2	3-3	242	8	VITRIFIED CLAY PIPE	SANITARY SEWER	Active	1/1/1950	BASIN 1
2160	3-20_3-19	3-20	3-19	230	8	VITRIFIED CLAY PIPE	SANITARY SEWER	Active	1/1/1959	BASIN 2
2161	3-21_3-72	3-21	3-72	305	10	VITRIFIED CLAY PIPE	SANITARY SEWER	Active	1/1/1964	BASIN 2
2162	32-10R_32-19	32-10R	32-19	268	8	VITRIFIED CLAY PIPE	SANITARY SEWER	Active	1/1/1955	BASIN 10
2163	32-12_32-13	32-12	32-13	119	8	VITRIFIED CLAY PIPE	SANITARY SEWER	Active	1/1/1952	BASIN 10
2164	32-13_32-15	32-13	32-15	15	6	VITRIFIED CLAY PIPE	SANITARY SEWER	Active		BASIN 10
2165	32-14R_32-13	32-14R	32-13	119	6	VITRIFIED CLAY PIPE	SANITARY SEWER	Active		BASIN 10
2166	32-15_32-16	32-15	32-16	105	8	VITRIFIED CLAY PIPE	SANITARY SEWER	Active		BASIN 10
2167	32-16_32-17	32-16	32-17	37	8	VITRIFIED CLAY PIPE	SANITARY SEWER	Active		BASIN 10
2168	32-17_32-18	32-17	32-18	227	8	VITRIFIED CLAY PIPE	SANITARY SEWER	Active		BASIN 10
2169	32-18_32-20	32-18	32-20	388	8	VITRIFIED CLAY PIPE	SANITARY SEWER	Active	5/1/1944	BASIN 10
2170	32-19_32-20	32-19	32-20	215	8	VITRIFIED CLAY PIPE	SANITARY SEWER	Active	1/1/1955	BASIN 10
2171	3-22_3-21	3-22	3-21	265	6	VITRIFIED CLAY PIPE	SANITARY SEWER	Active	1/1/1955	BASIN 2
2172	32-20_32-38	32-20	32-38	180	6	VITRIFIED CLAY PIPE	SANITARY SEWER	Active	1/1/1955	BASIN 10
2173	32-21_32-37	32-21	32-37	251	6	VITRIFIED CLAY PIPE	SANITARY SEWER	Active	1/1/1949	BASIN 10
2174	32-22_32-21	32-22	32-21	330	6	VITRIFIED CLAY PIPE	SANITARY SEWER	Active	1/1/1949	BASIN 10
2175	32-23_32-37	32-23	32-37	190	8	VITRIFIED CLAY PIPE	SANITARY SEWER	Active	1/1/1955	BASIN 10
2176	32-24R_32-23	32-24R	32-23	150	8	VITRIFIED CLAY PIPE	SANITARY SEWER	Active	1/1/1955	BASIN 10
2177	32-25_32-26	32-25	32-26	377	6	VITRIFIED CLAY PIPE	SANITARY SEWER	Active	1/1/1939	BASIN 10
2178	32-26_32-32	32-26	32-32	218	8	VITRIFIED CLAY PIPE	SANITARY SEWER	Active	1/1/1971	BASIN 10
2179	3-23_3-22	3-23	3-22	58	8	VITRIFIED CLAY PIPE	SANITARY SEWER	Active	1/1/1955	BASIN 2
2180	32-32_32-35	32-32	32-35	354	8	VITRIFIED CLAY PIPE	SANITARY SEWER	Active		BASIN 10
2181	32-33_23-103	32-33	23-103	198	8	VITRIFIED CLAY PIPE	SANITARY SEWER	Active	1/1/1944	BASIN 11
2182	32-34_32-33	32-34	32-33	588	6	VITRIFIED CLAY PIPE	SANITARY SEWER	Active	1/1/1944	BASIN 11
2183	32-35_23-114	32-35	23-114	499	8	VITRIFIED CLAY PIPE	SANITARY SEWER	Active	1/1/1955	BASIN 10
2184	32-36_32-26	32-36	32-26	415	6	VITRIFIED CLAY PIPE	SANITARY SEWER	Active	1/1/1944	BASIN 10
2185	32-37_32-48	32-37	32-48	200	6	VITRIFIED CLAY PIPE	SANITARY SEWER	Active		BASIN 10
2186	32-38_32-21	32-38	32-21	119	6	VITRIFIED CLAY PIPE	SANITARY SEWER	Active	1/1/1949	BASIN 10
2187	32-39R_32-18	32-39R	32-18	132	6	VITRIFIED CLAY PIPE	SANITARY SEWER	Active	5/1/1944	BASIN 10
2188	32-4_23-125	32-4	23-125	180	6	VITRIFIED CLAY PIPE	SANITARY SEWER	Active	1/1/1953	BASIN 10
2189	3-24_3-23	3-24	3-23	306	8	VITRIFIED CLAY PIPE	SANITARY SEWER	Active	1/1/1955	BASIN 2
2190	32-40_32-41	32-40	32-41	223	6	VITRIFIED CLAY PIPE	SANITARY SEWER	Active	1/1/1949	BASIN 10
2191	32-41_32-38	32-41	32-38	119	6	VITRIFIED CLAY PIPE	SANITARY SEWER	Active	1/1/1949	BASIN 10
2192	32-42_32-45	32-42	32-45	126	6	VITRIFIED CLAY PIPE	SANITARY SEWER	Active	1/1/1949	BASIN 10
2193	32-43R_32-44	32-43R	32-44	137	6	VITRIFIED CLAY PIPE	SANITARY SEWER	Active	1/1/1949	BASIN 10
2194	32-44_32-45	32-44	32-45	137	6	VITRIFIED CLAY PIPE	SANITARY SEWER	Active	1/1/1949	BASIN 10
2195	32-45_32-46	32-45	32-46	134	8	HIGH DENSITY POLYETHYLENE	SANITARY SEWER	Active	3/29/2011	BASIN 10
2196	32-46_32-51	32-46	32-51	32	8	HIGH DENSITY POLYETHYLENE	SANITARY SEWER	Active	3/29/2011	BASIN 10
2197	32-48_32-36	32-48	32-36	150	8	VITRIFIED CLAY PIPE	SANITARY SEWER	Active	1/1/1944	BASIN 10
2198	32-49R_32-36	32-49R	32-36	150	6	VITRIFIED CLAY PIPE	SANITARY SEWER	Active	1/1/1971	BASIN 10
2199	32-5_32-4	32-5	32-4	243	6	VITRIFIED CLAY PIPE	SANITARY SEWER	Active	1/1/1948	BASIN 10
2200	3-25_3-24	3-25	3-24	180	8	VITRIFIED CLAY PIPE	SANITARY SEWER	Active	1/1/1955	BASIN 2
2201	32-50_32-41	32-50	32-41	310	4	CAST IRON PIPE	FORCE MAIN	Active		BASIN 10
2202	32-51_32-50	32-51	32-50	3	8	HIGH DENSITY POLYETHYLENE	SANITARY SEWER	Active	3/29/2011	BASIN 10
2203	32-6_32-5	32-6	32-5	157	6	VITRIFIED CLAY PIPE	SANITARY SEWER	Active	1/1/1953	BASIN 10
2204	3-26_3-27	3-26	3-27	230	8	VITRIFIED CLAY PIPE	SANITARY SEWER	Active	1/1/1959	BASIN 2
2205	32-7_32-6	32-7	32-6	69	8	VITRIFIED CLAY PIPE	SANITARY SEWER	Active	9/28/1953	BASIN 10
2206	3-27_3-28	3-27	3-28	272	8	VITRIFIED CLAY PIPE	SANITARY SEWER	Active	1/1/1959	BASIN 2
2207	3-28_3-22	3-28	3-22	265	8	VITRIFIED CLAY PIPE	SANITARY SEWER	Active	1/1/1959	BASIN 2
2208	32-8R_32-7	32-8R	32-7	137	6	VITRIFIED CLAY PIPE	SANITARY SEWER	Active	1/1/1971	BASIN 10
2209	32-9_32-25	32-9	32-25	387	8	VITRIFIED CLAY PIPE	SANITARY SEWER	Active	10/24/2019	BASIN 10
2210	3-29_3-28	3-29	3-28	45	8	VITRIFIED CLAY PIPE	SANITARY SEWER	Active	1/1/1959	BASIN 2
2211	3-3_3-4	3-3	3-4	39	6	VITRIFIED CLAY PIPE	SANITARY SEWER	Active	1/1/1950	BASIN 1
2212	3-30_3-31	3-30	3-31	297	8	VITRIFIED CLAY PIPE	SANITARY SEWER	Active	1/1/1944	BASIN 2
2213	33-1_34-37	33-1	34-37	282	8	VITRIFIED CLAY PIPE	SANITARY SEWER	Active	1/1/1955	BASIN 7
2214	3-31_3-80	3-31	3-80	121	6	VITRIFIED CLAY PIPE	SANITARY SEWER	Active	1/1/1988	BASIN 2
2215	33-10_33-11	33-10	33-11	167	8	VITRIFIED CLAY PIPE	SANITARY SEWER	Active	1/1/1979	BASIN 9
2216	33-11_33-12	33-11	33-12	281	8	VITRIFIED CLAY PIPE	SANITARY SEWER	Active	1/1/1979	BASIN 9
2217	33-12_33-13	33-12	33-13	291	8	VITRIFIED CLAY PIPE	SANITARY SEWER	Active	1/1/1979	BASIN 9

2218	33-13_33-20	33-13	33-20	290	8	VITRIFIED CLAY PIPE	SANITARY SEWER	Active	1/1/1979	BASIN 9
2219	33-14_33-15	33-14	33-15	304	8	VITRIFIED CLAY PIPE	SANITARY SEWER	Active	1/1/1979	BASIN 9
2220	33-15_33-16	33-15	33-16	300	8	VITRIFIED CLAY PIPE	SANITARY SEWER	Active	1/1/1979	BASIN 9
2221	33-16_33-17	33-16	33-17	215	8	CAST IRON PIPE	SANITARY SEWER	Active	1/1/1979	BASIN 9
2222	33-17_33-18	33-17	33-18	107	8	CAST IRON PIPE	SANITARY SEWER	Active	1/1/1979	BASIN 9
2223	33-18_33-19	33-18	33-19	107	8	CAST IRON PIPE	SANITARY SEWER	Active	1/1/1979	BASIN 9
2224	33-19_33-20	33-19	33-20	216	8	VITRIFIED CLAY PIPE	SANITARY SEWER	Active	1/1/1979	BASIN 9
2225	33-2_33-1	33-2	33-1	325	8	VITRIFIED CLAY PIPE	SANITARY SEWER	Active	1/1/1955	BASIN 7
2226	3-32_3-33	3-32	3-33	400	6	VITRIFIED CLAY PIPE	SANITARY SEWER	Active	1/1/1944	BASIN 2
2227	33-20_33-21	33-20	33-21	322	8	VITRIFIED CLAY PIPE	SANITARY SEWER	Active	1/1/1979	BASIN 9
2228	33-21_33-22	33-21	33-22	299	8	VITRIFIED CLAY PIPE	SANITARY SEWER	Active	1/1/1979	BASIN 9
2229	33-22_34-71	33-22	34-71	297	8	VITRIFIED CLAY PIPE	SANITARY SEWER	Active	1/1/1979	BASIN 9
2230	33-23_33-2	33-23	33-2	350	8	VITRIFIED CLAY PIPE	SANITARY SEWER	Active	1/1/1981	BASIN 7
2231	33-24_33-23	33-24	33-23	350	8	VITRIFIED CLAY PIPE	SANITARY SEWER	Active	1/1/1981	BASIN 7
2232	33-25_33-24	33-25	33-24	310	8	VITRIFIED CLAY PIPE	SANITARY SEWER	Active	1/1/1981	BASIN 7
2233	33-3_26-64	33-3	26-64	320	8	DUCTILE IRON PIPE	SANITARY SEWER	Active	1/1/1979	BASIN 7
2234	3-33_3-35	3-33	3-35	150	6	VITRIFIED CLAY PIPE	SANITARY SEWER	Active	1/1/1944	BASIN 2
2235	33-4_33-3	33-4	33-3	169	8	DUCTILE IRON PIPE	SANITARY SEWER	Active	1/1/1979	BASIN 7
2236	3-34_3-35	3-34	3-35	275	6	VITRIFIED CLAY PIPE	SANITARY SEWER	Active	1/1/1944	BASIN 2
2237	33-5_33-4	33-5	33-4	125	8	DUCTILE IRON PIPE	SANITARY SEWER	Active	1/1/1979	BASIN 7
2238	3-35_3-36	3-35	3-36	303	6	VITRIFIED CLAY PIPE	SANITARY SEWER	Active	1/1/1944	BASIN 2
2239	33-6_33-5	33-6	33-5	283	8	VITRIFIED CLAY PIPE	SANITARY SEWER	Active	1/1/1979	BASIN 7
2240	3-36_3-37	3-36	3-37	160	8	VITRIFIED CLAY PIPE	SANITARY SEWER	Active	1/1/1944	BASIN 2
2241	33-7_33-6	33-7	33-6	260	8	VITRIFIED CLAY PIPE	SANITARY SEWER	Active	1/1/1979	BASIN 7
2242	3-37_3-39	3-37	3-39	166	8	VITRIFIED CLAY PIPE	SANITARY SEWER	Active	1/1/1956	BASIN 2
2243	3-38_3-37	3-38	3-37	30	8	VITRIFIED CLAY PIPE	SANITARY SEWER	Active	1/1/1956	BASIN 2
2244	3-39_10-113	3-39	10-113	73	8	VITRIFIED CLAY PIPE	SANITARY SEWER	Active	1/1/1954	BASIN 2
2245	3-4_3-5	3-4	3-5	40	6	VITRIFIED CLAY PIPE	SANITARY SEWER	Active	1/1/1944	BASIN 1
2246	34-1_34-2	34-1	34-2	246	8	VITRIFIED CLAY PIPE	SANITARY SEWER	Active	1/1/1963	BASIN 7
2247	34-10_34-11	34-10	34-11	208	8	VITRIFIED CLAY PIPE	SANITARY SEWER	Active	1/1/1953	BASIN 7
2248	34-11_27-116	34-11	27-116	85	8	VITRIFIED CLAY PIPE	SANITARY SEWER	Active	1/1/1953	BASIN 7
2249	34-13_28-15	34-13	28-15	304	8	HIGH DENSITY POLYETHYLENE	SANITARY SEWER	Active	6/10/2016	BASIN 7
2250	34-14_34-55	34-14	34-55	161	8	POLYVINYLCHLORIDE PIPE	SANITARY SEWER	Active	1/1/1953	BASIN 7
2251	34-15_34-14	34-15	34-14	180	8	VITRIFIED CLAY PIPE	SANITARY SEWER	Active	1/1/1955	BASIN 7
2252	34-16_34-56	34-16	34-56	127	8	VITRIFIED CLAY PIPE	SANITARY SEWER	Active	1/1/1955	BASIN 7
2253	34-17R_34-16	34-17R	34-16	187	8	VITRIFIED CLAY PIPE	SANITARY SEWER	Active	1/1/1955	BASIN 7
2254	34-18R_34-16	34-18R	34-16	82	8	VITRIFIED CLAY PIPE	SANITARY SEWER	Active	1/1/1955	BASIN 7
2255	34-19_34-16	34-19	34-16	127	8	VITRIFIED CLAY PIPE	SANITARY SEWER	Active	1/1/1955	BASIN 7
2256	3-42_10-114	3-42	10-114	338	8	VITRIFIED CLAY PIPE	SANITARY SEWER	Active	1/1/1960	BASIN 2
2257	34-2_34-3	34-2	34-3	100	8	VITRIFIED CLAY PIPE	SANITARY SEWER	Active	1/1/1963	BASIN 7
2258	34-20R_34-19	34-20R	34-19	206	8	VITRIFIED CLAY PIPE	SANITARY SEWER	Active	1/1/1955	BASIN 7
2259	34-21R_34-22	34-21R	34-22	210	8	VITRIFIED CLAY PIPE	SANITARY SEWER	Active	1/1/1955	BASIN 7
2260	34-22_34-23	34-22	34-23	106	8	VITRIFIED CLAY PIPE	SANITARY SEWER	Active	1/1/1955	BASIN 7
2261	34-23_34-54	34-23	34-54	219	8	VITRIFIED CLAY PIPE	SANITARY SEWER	Active	1/1/1955	BASIN 7
2262	34-24_34-13	34-24	34-13	144	6	VITRIFIED CLAY PIPE	SANITARY SEWER	Active	1/1/1947	BASIN 7
2263	34-25_34-24	34-25	34-24	204	6	VITRIFIED CLAY PIPE	SANITARY SEWER	Active	1/1/1955	BASIN 7
2264	34-26_34-25	34-26	34-25	231	6	VITRIFIED CLAY PIPE	SANITARY SEWER	Active	1/1/1947	BASIN 7
2265	34-27_34-26	34-27	34-26	97	8	VITRIFIED CLAY PIPE	SANITARY SEWER	Active	1/1/1954	BASIN 7
2266	34-28_34-27	34-28	34-27	232	8	VITRIFIED CLAY PIPE	SANITARY SEWER	Active	1/1/1954	BASIN 7
2267	34-29_34-28	34-29	34-28	240	8	VITRIFIED CLAY PIPE	SANITARY SEWER	Active	1/1/1954	BASIN 7
2268	3-43_3-42	3-43	3-42	283	8	VITRIFIED CLAY PIPE	SANITARY SEWER	Active	1/1/1964	BASIN 2
2269	34-3_34-5	34-3	34-5	375	8	VITRIFIED CLAY PIPE	SANITARY SEWER	Active	9/1/1950	BASIN 7
2270	34-30R_34-29	34-30R	34-29	187	6	VITRIFIED CLAY PIPE	SANITARY SEWER	Active	1/1/1954	BASIN 7
2271	34-31_34-28	34-31	34-28	118	8	VITRIFIED CLAY PIPE	SANITARY SEWER	Active	1/1/1954	BASIN 7
2272	34-32R_34-33	34-32R	34-33	110	8	VITRIFIED CLAY PIPE	SANITARY SEWER	Active	1/1/1954	BASIN 7
2273	34-33_34-31	34-33	34-31	231	8	VITRIFIED CLAY PIPE	SANITARY SEWER	Active	1/1/1954	BASIN 7
2274	34-34_34-33	34-34	34-33	435	8	VITRIFIED CLAY PIPE	SANITARY SEWER	Active	1/1/1954	BASIN 7
2275	34-35_34-34	34-35	34-34	182	8	VITRIFIED CLAY PIPE	SANITARY SEWER	Active	1/1/1955	BASIN 7
2276	34-36_34-35	34-36	34-35	144	8	VITRIFIED CLAY PIPE	SANITARY SEWER	Active	1/1/1955	BASIN 7
2277	34-37_34-36	34-37	34-36	325	8	VITRIFIED CLAY PIPE	SANITARY SEWER	Active	1/1/1955	BASIN 7
2278	34-38_34-74	34-38	34-74	133	8	VITRIFIED CLAY PIPE	SANITARY SEWER	Active	1/1/1953	BASIN 8
2279	34-39R_34-38	34-39R	34-38	15	8		SANITARY SEWER	Active		BASIN 8
2280	34-4_34-3	34-4	34-3	100	8	VITRIFIED CLAY PIPE	SANITARY SEWER	Active		BASIN 7
2282	34-41_35-6	34-41	35-6	78	8	VITRIFIED CLAY PIPE	SANITARY SEWER	Active	1/1/1954	BASIN 8
2283	34-42R_34-41	34-42R	34-41	90	8	CAST IRON PIPE	SANITARY SEWER	Active	1/1/1954	BASIN 8
2284	34-43R_34-44	34-43R	34-44	119	8	VITRIFIED CLAY PIPE	SANITARY SEWER	Active	1/1/1954	BASIN 8
2285	34-44_34-45	34-44	34-45	110	8	VITRIFIED CLAY PIPE	SANITARY SEWER	Active	1/1/1954	BASIN 8
2286	34-45_34-41	34-45	34-41	256	8	VITRIFIED CLAY PIPE	SANITARY SEWER	Active	1/1/1954	BASIN 8
2287	34-46_34-45	34-46	34-45	90	8	VITRIFIED CLAY PIPE	SANITARY SEWER	Active	1/1/1954	BASIN 8
2288	34-47_34-46	34-47	34-46	90	8	VITRIFIED CLAY PIPE	SANITARY SEWER	Active	1/1/1954	BASIN 8
2289	34-48_34-47	34-48	34-47	242	8	VITRIFIED CLAY PIPE	SANITARY SEWER	Active	1/1/1955	BASIN 8
2290	34-49_34-48	34-49	34-48	264	8	VITRIFIED CLAY PIPE	SANITARY SEWER	Active	1/1/1955	BASIN 8
2291	3-44R_3-43	3-44R	3-43	147	6	VITRIFIED CLAY PIPE	SANITARY SEWER	Active	1/1/1964	BASIN 2

2292	34-5_27-120	34-5	27-120	190	8	VITRIFIED CLAY PIPE	SANITARY SEWER	Active	9/1/1950	BASIN 7
2293	34-50_34-47	34-50	34-47	254	8	VITRIFIED CLAY PIPE	SANITARY SEWER	Active	1/1/1955	BASIN 8
2294	34-51R_34-50	34-51R	34-50	59	6	VITRIFIED CLAY PIPE	SANITARY SEWER	Active	1/1/1955	BASIN 8
2295	34-52R_34-53	34-52R	34-53	100	8	VITRIFIED CLAY PIPE	SANITARY SEWER	Active	1/1/1955	BASIN 8
2296	34-53_35-11	34-53	35-11	230	8	VITRIFIED CLAY PIPE	SANITARY SEWER	Active	1/1/1955	BASIN 8
2297	34-54_34-25	34-54	34-25	82	8	VITRIFIED CLAY PIPE	SANITARY SEWER	Active	1/1/1955	BASIN 7
2298	34-55_34-13	34-55	34-13	112	8	VITRIFIED CLAY PIPE	SANITARY SEWER	Active	1/1/1953	BASIN 7
2299	34-56_34-15	34-56	34-15	51	8	VITRIFIED CLAY PIPE	SANITARY SEWER	Active	1/1/1955	BASIN 7
2300	34-57_35-93	34-57	35-93	289	10	VITRIFIED CLAY PIPE	SANITARY SEWER	Active	1/1/1978	BASIN 9
2301	34-58_34-57	34-58	34-57	99	8	VITRIFIED CLAY PIPE	SANITARY SEWER	Active	1/1/1978	BASIN 9
2302	34-59_34-73	34-59	34-73	110	8	VITRIFIED CLAY PIPE	SANITARY SEWER	Active	1/1/1978	BASIN 9
2303	3-45R_3-42	3-45R	3-42	106	8	VITRIFIED CLAY PIPE	SANITARY SEWER	Active	1/1/1960	BASIN 2
2304	34-60_34-59	34-60	34-59	249	8	VITRIFIED CLAY PIPE	SANITARY SEWER	Active	1/1/1978	BASIN 9
2305	34-61_34-60	34-61	34-60	350	8	VITRIFIED CLAY PIPE	SANITARY SEWER	Active	1/1/1978	BASIN 9
2306	34-62_34-57	34-62	34-57	280	10	VITRIFIED CLAY PIPE	SANITARY SEWER	Active	1/1/1979	BASIN 9
2307	34-63_34-62	34-63	34-62	280	10	VITRIFIED CLAY PIPE	SANITARY SEWER	Active	1/1/1979	BASIN 9
2308	34-64_34-63	34-64	34-63	280	10	VITRIFIED CLAY PIPE	SANITARY SEWER	Active	1/1/1979	BASIN 9
2309	34-65_34-72	34-65	34-72	360	8	VITRIFIED CLAY PIPE	SANITARY SEWER	Active	1/1/1979	BASIN 9
2310	34-66_34-65	34-66	34-65	300	8	VITRIFIED CLAY PIPE	SANITARY SEWER	Active	1/1/1979	BASIN 9
2311	34-67_34-66	34-67	34-66	300	8	VITRIFIED CLAY PIPE	SANITARY SEWER	Active	1/1/1979	BASIN 9
2312	34-68_34-67	34-68	34-67	300	8	VITRIFIED CLAY PIPE	SANITARY SEWER	Active	1/1/1979	BASIN 9
2313	34-69_34-68	34-69	34-68	300	8	VITRIFIED CLAY PIPE	SANITARY SEWER	Active	1/1/1979	BASIN 9
2314	3-46R_3-47	3-46R	3-47	235	8	VITRIFIED CLAY PIPE	SANITARY SEWER	Active	1/1/1955	BASIN 2
2315	3-47_3-55	3-47	3-55	253	8	VITRIFIED CLAY PIPE	SANITARY SEWER	Active	1/1/1955	BASIN 2
2316	34-70_34-69	34-70	34-69	300	8	VITRIFIED CLAY PIPE	SANITARY SEWER	Active	1/1/1979	BASIN 9
2317	34-71_34-70	34-71	34-70	288	8	VITRIFIED CLAY PIPE	SANITARY SEWER	Active	1/1/1979	BASIN 9
2318	34-72_34-64	34-72	34-64	140	8	VITRIFIED CLAY PIPE	SANITARY SEWER	Active	1/1/1979	BASIN 9
2319	34-73_34-58	34-73	34-58	175	8	VITRIFIED CLAY PIPE	SANITARY SEWER	Active	1/1/1978	BASIN 9
2320	34-74_35-19	34-74	35-19	528	8	VITRIFIED CLAY PIPE	SANITARY SEWER	Active	1/1/1953	BASIN 8
2321	34-75_34-76	34-75	34-76	62	8	VITRIFIED CLAY PIPE	TRUNK LINE	Active	6/1/1986	BASIN 7
2322	34-76_34-77	34-76	34-77	97	8	VITRIFIED CLAY PIPE	TRUNK LINE	Active	6/1/1986	BASIN 7
2323	34-77_34-26	34-77	34-26	97	8	VITRIFIED CLAY PIPE	SANITARY SEWER	Active		BASIN 7
2324	3-48_3-47	3-48	3-47	132	8	VITRIFIED CLAY PIPE	SANITARY SEWER	Active	1/1/1955	BASIN 2
2325	34-9_34-10	34-9	34-10	159	8	VITRIFIED CLAY PIPE	SANITARY SEWER	Active	1/1/1953	BASIN 7
2326	3-49_3-48	3-49	3-48	125	8	VITRIFIED CLAY PIPE	SANITARY SEWER	Active	1/1/1955	BASIN 2
2327	3-5_4-1	3-5	4-1	337	6	VITRIFIED CLAY PIPE	SANITARY SEWER	Active	1/1/1944	BASIN 1
2328	3-50_3-53	3-50	3-53	275	8	VITRIFIED CLAY PIPE	SANITARY SEWER	Active	10/30/1998	BASIN 2
2329	3-50R_3-49	3-50R	3-49	214	8	VITRIFIED CLAY PIPE	SANITARY SEWER	Active	1/1/1955	BASIN 2
2330	3-50S_3-87	3-50S	3-87	64	8	VITRIFIED CLAY PIPE	SANITARY SEWER	Active	1/1/1956	BASIN 2
2331	3-51_3-48	3-51	3-48	67	8	VITRIFIED CLAY PIPE	SANITARY SEWER	Active	1/1/1955	BASIN 2
2332	35-10_35-6	35-10	35-6	140	8	CAST IRON PIPE	SANITARY SEWER	Active	1/1/1954	BASIN 8
2333	35-11_35-10	35-11	35-10	143	8	VITRIFIED CLAY PIPE	SANITARY SEWER	Active	1/1/1955	BASIN 8
2334	35-12_35-11	35-12	35-11	391	8	VITRIFIED CLAY PIPE	SANITARY SEWER	Active	1/1/1955	BASIN 8
2335	35-13_35-12	35-13	35-12	128	8	VITRIFIED CLAY PIPE	SANITARY SEWER	Active	1/1/1963	BASIN 8
2336	35-15_35-17	35-15	35-17	96	8	VITRIFIED CLAY PIPE	SANITARY SEWER	Active	1/1/1954	BASIN 8
2337	35-16R_35-15	35-16R	35-15	80	8	VITRIFIED CLAY PIPE	SANITARY SEWER	Active	1/1/1954	BASIN 8
2338	35-17_35-18	35-17	35-18	155	8	VITRIFIED CLAY PIPE	SANITARY SEWER	Active	1/1/1954	BASIN 8
2339	35-18_35-21	35-18	35-21	92	8	VITRIFIED CLAY PIPE	SANITARY SEWER	Active	1/1/1954	BASIN 8
2340	35-19_35-20	35-19	35-20	85	8	VITRIFIED CLAY PIPE	SANITARY SEWER	Active	1/1/1953	BASIN 8
2341	35-1R_35-2	35-1R	35-2	134	8	VITRIFIED CLAY PIPE	SANITARY SEWER	Active	1/1/1953	BASIN 7
2342	35-2_34-11	35-2	34-11	134	8	VITRIFIED CLAY PIPE	SANITARY SEWER	Active	1/1/1953	BASIN 7
2343	3-52_3-51	3-52	3-51	125	8	VITRIFIED CLAY PIPE	SANITARY SEWER	Active	1/1/1955	BASIN 2
2344	35-20_35-21	35-20	35-21	92	8	VITRIFIED CLAY PIPE	SANITARY SEWER	Active	1/1/1953	BASIN 8
2345	35-21_35-22	35-21	35-22	112	8	VITRIFIED CLAY PIPE	SANITARY SEWER	Active	1/1/1953	BASIN 8
2346	35-22_35-32	35-22	35-32	322	8	VITRIFIED CLAY PIPE	SANITARY SEWER	Active	1/1/1953	BASIN 8
2347	35-23R_35-22	35-23R	35-22	175	8	VITRIFIED CLAY PIPE	SANITARY SEWER	Active	1/1/1953	BASIN 8
2348	35-24_35-97	35-24	35-97	205	8	VITRIFIED CLAY PIPE	SANITARY SEWER	Active	1/1/1953	BASIN 8
2349	35-25R_35-24	35-25R	35-24	85	8	VITRIFIED CLAY PIPE	SANITARY SEWER	Active	1/1/1953	BASIN 8
2350	35-26_35-27	35-26	35-27	226	6	VITRIFIED CLAY PIPE	SANITARY SEWER	Active	1/1/1946	BASIN 7
2351	35-27_28-18	35-27	28-18	234	6	VITRIFIED CLAY PIPE	SANITARY SEWER	Active	1/1/1946	BASIN 7
2352	35-29R_28-105	35-29R	28-105	290	6	VITRIFIED CLAY PIPE	SANITARY SEWER	Active	1/1/1947	BASIN 7
2353	35-3_35-2	35-3	35-2	50	8	VITRIFIED CLAY PIPE	SANITARY SEWER	Active	1/1/1953	BASIN 7
2354	3-53_3-64	3-53	3-64	206	8	VITRIFIED CLAY PIPE	SANITARY SEWER	Active	10/30/1998	BASIN 2
2355	35-30R_35-31	35-30R	35-31	247	8	VITRIFIED CLAY PIPE	SANITARY SEWER	Active	1/1/1953	BASIN 8
2356	35-31_35-32	35-31	35-32	73	8	VITRIFIED CLAY PIPE	SANITARY SEWER	Active	1/1/1953	BASIN 8
2357	35-32_35-37	35-32	35-37	267	8	VITRIFIED CLAY PIPE	SANITARY SEWER	Active	1/1/1953	BASIN 8
2358	35-33R_35-32	35-33R	35-32	285	8	VITRIFIED CLAY PIPE	SANITARY SEWER	Active	1/1/1953	BASIN 8
2359	35-34R_35-35	35-34R	35-35	217	8	VITRIFIED CLAY PIPE	SANITARY SEWER	Active	1/1/1953	BASIN 8
2360	35-35_35-36	35-35	35-36	225	8	VITRIFIED CLAY PIPE	SANITARY SEWER	Active	1/1/1953	BASIN 8
2361	35-36_35-49	35-36	35-49	64	8	VITRIFIED CLAY PIPE	SANITARY SEWER	Active	1/1/1953	BASIN 8
2362	35-37_35-36	35-37	35-36	138	8	VITRIFIED CLAY PIPE	SANITARY SEWER	Active	1/1/1953	BASIN 8
2363	35-38_35-37	35-38	35-37	57	8	VITRIFIED CLAY PIPE	SANITARY SEWER	Active	1/1/1953	BASIN 8
2365	35-39_35-38	35-39	35-38	192	8	VITRIFIED CLAY PIPE	SANITARY SEWER	Active	1/1/1953	BASIN 8

2366	3-53R_3-52	3-53R	3-52	125	8	VITRIFIED CLAY PIPE	SANITARY SEWER	Active	1/1/1955	BASIN 2
2367	3-54_3-52	3-54	3-52	223	8	VITRIFIED CLAY PIPE	SANITARY SEWER	Active	1/1/1959	BASIN 2
2368	35-4_35-3	35-4	35-3	110	8	VITRIFIED CLAY PIPE	SANITARY SEWER	Active	1/1/1953	BASIN 7
2369	35-40R_35-39	35-40R	35-39	85	8	VITRIFIED CLAY PIPE	SANITARY SEWER	Active	1/1/1953	BASIN 8
2370	35-41R_28-106	35-41R	28-106	270	6	VITRIFIED CLAY PIPE	SANITARY SEWER	Active	1/1/1947	BASIN 7
2371	35-43_28-23	35-43	28-23	299	6	VITRIFIED CLAY PIPE	SANITARY SEWER	Active	1/1/1946	BASIN 7
2372	35-44R_35-43	35-44R	35-43	176	6	VITRIFIED CLAY PIPE	SANITARY SEWER	Active	1/1/1946	BASIN 7
2374	35-45R_35-46	35-45R	35-46	150	8	VITRIFIED CLAY PIPE	SANITARY SEWER	Active	1/1/1953	BASIN 8
2375	35-46_35-47	35-46	35-47	150	8	VITRIFIED CLAY PIPE	SANITARY SEWER	Active	1/1/1953	BASIN 8
2376	35-47_35-48	35-47	35-48	50	8	VITRIFIED CLAY PIPE	SANITARY SEWER	Active	1/1/1953	BASIN 8
2378	35-48_35-52	35-48	35-52	140	8	VITRIFIED CLAY PIPE	SANITARY SEWER	Active	1/1/1953	BASIN 8
2380	35-49_35-48	35-49	35-48	135	8	VITRIFIED CLAY PIPE	SANITARY SEWER	Active	1/1/1953	BASIN 8
2381	3-55_3-57	3-55	3-57	155	8	VITRIFIED CLAY PIPE	SANITARY SEWER	Active	1/1/1955	BASIN 2
2382	35-50_35-49	35-50	35-49	163	8	VITRIFIED CLAY PIPE	SANITARY SEWER	Active	1/1/1953	BASIN 8
2383	35-51R_35-50	35-51R	35-50	39	8	VITRIFIED CLAY PIPE	SANITARY SEWER	Active	1/1/1953	BASIN 8
2384	35-52_35-53	35-52	35-53	140	8	VITRIFIED CLAY PIPE	SANITARY SEWER	Active	1/1/1953	BASIN 8
2385	35-53_35-57	35-53	35-57	319	8	VITRIFIED CLAY PIPE	SANITARY SEWER	Active	1/1/1953	BASIN 8
2386	35-54_35-53	35-54	35-53	140	8	VITRIFIED CLAY PIPE	SANITARY SEWER	Active	1/1/1945	BASIN 8
2387	35-55R_35-54	35-55R	35-54	205	8	VITRIFIED CLAY PIPE	SANITARY SEWER	Active	1/1/1945	BASIN 8
2389	35-57_35-58	35-57	35-58	333	6	VITRIFIED CLAY PIPE	SANITARY SEWER	Active		BASIN 8
2390	35-58_36-3	35-58	36-3	510	6	VITRIFIED CLAY PIPE	SANITARY SEWER	Active	1/1/1944	BASIN 8
2391	35-59_35-58	35-59	35-58	333	6	VITRIFIED CLAY PIPE	SANITARY SEWER	Active	1/1/1947	BASIN 8
2392	35-5R_35-4	35-5R	35-4	110	8	VITRIFIED CLAY PIPE	SANITARY SEWER	Active	1/1/1953	BASIN 7
2393	35-6_35-15	35-6	35-15	269	8	VITRIFIED CLAY PIPE	SANITARY SEWER	Active	1/1/1954	BASIN 8
2394	3-56_3-55	3-56	3-55	171	8	VITRIFIED CLAY PIPE	SANITARY SEWER	Active	1/1/1955	BASIN 2
2395	35-60_35-59	35-60	35-59	110	8	VITRIFIED CLAY PIPE	SANITARY SEWER	Active	1/1/1947	BASIN 8
2397	35-61_35-60	35-61	35-60	150	8	VITRIFIED CLAY PIPE	SANITARY SEWER	Active	1/1/1952	BASIN 8
2398	35-62_35-61	35-62	35-61	150	8	VITRIFIED CLAY PIPE	SANITARY SEWER	Active	1/1/1952	BASIN 8
2399	35-63_35-62	35-63	35-62	137	8	VITRIFIED CLAY PIPE	SANITARY SEWER	Active	1/1/1951	BASIN 8
2400	35-64_35-63	35-64	35-63	100	8	VITRIFIED CLAY PIPE	SANITARY SEWER	Active	1/1/1951	BASIN 8
2401	35-65_35-64	35-65	35-64	180	8	VITRIFIED CLAY PIPE	SANITARY SEWER	Active	1/1/1951	BASIN 8
2402	35-66_35-65	35-66	35-65	285	8	VITRIFIED CLAY PIPE	SANITARY SEWER	Active	1/1/1951	BASIN 8
2403	35-67_35-66	35-67	35-66	180	8	VITRIFIED CLAY PIPE	SANITARY SEWER	Active	1/1/1951	BASIN 8
2404	35-68_35-60	35-68	35-60	405	8	VITRIFIED CLAY PIPE	SANITARY SEWER	Active	1/1/1951	BASIN 8
2405	35-69R_35-68	35-69R	35-68	277	8	VITRIFIED CLAY PIPE	SANITARY SEWER	Active	1/1/1951	BASIN 8
2406	3-57_10-82	3-57	10-82	47	10	VITRIFIED CLAY PIPE	SANITARY SEWER	Active	1/1/1964	BASIN 2
2407	35-7_34-9	35-7	34-9	164	8	VITRIFIED CLAY PIPE	SANITARY SEWER	Active	1/1/1953	BASIN 7
2408	35-70_35-68	35-70	35-68	95	8	VITRIFIED CLAY PIPE	SANITARY SEWER	Active	1/1/1952	BASIN 8
2409	35-71_35-70	35-71	35-70	95	8	VITRIFIED CLAY PIPE	SANITARY SEWER	Active	1/1/1952	BASIN 8
2410	35-72R_35-63	35-72R	35-63	100	8	VITRIFIED CLAY PIPE	SANITARY SEWER	Active	1/1/1951	BASIN 8
2411	35-73_35-71	35-73	35-71	260	8	VITRIFIED CLAY PIPE	SANITARY SEWER	Active	1/1/1952	BASIN 8
2412	35-74R_35-73	35-74R	35-73	445	8	VITRIFIED CLAY PIPE	SANITARY SEWER	Active	1/1/1952	BASIN 8
2413	35-75_35-76	35-75	35-76	50	6	VITRIFIED CLAY PIPE	SANITARY SEWER	Active		BASIN 8
2414	35-76_36-10	35-76	36-10	241	6	VITRIFIED CLAY PIPE	SANITARY SEWER	Active		BASIN 8
2415	35-77_35-76	35-77	35-76	50	6	VITRIFIED CLAY PIPE	SANITARY SEWER	Active		BASIN 8
2416	35-78R_35-77	35-78R	35-77	76	6	VITRIFIED CLAY PIPE	SANITARY SEWER	Active		BASIN 8
2417	35-79_35-80	35-79	35-80	45	8	VITRIFIED CLAY PIPE	SANITARY SEWER	Active	1/1/1975	BASIN 8
2418	3-58_3-57	3-58	3-57	132	10	VITRIFIED CLAY PIPE	SANITARY SEWER	Active	1/1/1964	BASIN 2
2419	35-80_35-77	35-80	35-77	250	8	VITRIFIED CLAY PIPE	SANITARY SEWER	Active	1/1/1975	BASIN 8
2420	35-81_35-80	35-81	35-80	105	8	VITRIFIED CLAY PIPE	SANITARY SEWER	Active	1/1/1975	BASIN 8
2421	35-82_35-81	35-82	35-81	105	8	VITRIFIED CLAY PIPE	SANITARY SEWER	Active	1/1/1975	BASIN 8
2422	35-83_35-84	35-83	35-84	120	8	VITRIFIED CLAY PIPE	SANITARY SEWER	Active	1/1/1975	BASIN 8
2423	35-84_35-81	35-84	35-81	215	8	VITRIFIED CLAY PIPE	SANITARY SEWER	Active	1/1/1975	BASIN 8
2424	35-85_35-84	35-85	35-84	265	8	VITRIFIED CLAY PIPE	SANITARY SEWER	Active	1/1/1975	BASIN 8
2425	35-86_35-85	35-86	35-85	260	8	VITRIFIED CLAY PIPE	SANITARY SEWER	Active	1/1/1975	BASIN 8
2426	35-87_35-86	35-87	35-86	150	8	VITRIFIED CLAY PIPE	SANITARY SEWER	Active	1/1/1975	BASIN 8
2427	35-88_36-56	35-88	36-56	257	8	VITRIFIED CLAY PIPE	SANITARY SEWER	Active	1/1/1970	BASIN 9
2428	35-89_35-88	35-89	35-88	367	12	VITRIFIED CLAY PIPE	SANITARY SEWER	Active	1/1/1978	BASIN 9
2429	35-8R_35-7	35-8R	35-7	164	8	VITRIFIED CLAY PIPE	SANITARY SEWER	Active	1/1/1953	BASIN 7
2430	3-59_3-58	3-59	3-58	265	10	VITRIFIED CLAY PIPE	SANITARY SEWER	Active	1/1/1964	BASIN 2
2431	35-90_35-89	35-90	35-89	329	12	VITRIFIED CLAY PIPE	SANITARY SEWER	Active	1/1/1978	BASIN 9
2432	35-91_35-90	35-91	35-90	339	12	VITRIFIED CLAY PIPE	SANITARY SEWER	Active	1/1/1978	BASIN 9
2433	35-92_35-91	35-92	35-91	339	12	VITRIFIED CLAY PIPE	SANITARY SEWER	Active	1/1/1978	BASIN 9
2434	35-93_35-92	35-93	35-92	335	10	VITRIFIED CLAY PIPE	SANITARY SEWER	Active	1/1/1978	BASIN 9
2435	35-94_35-95	35-94	35-95	40	8	VITRIFIED CLAY PIPE	SANITARY SEWER	Active	2/6/1989	BASIN 8
2436	35-95_35-96	35-95	35-96	178	8	VITRIFIED CLAY PIPE	SANITARY SEWER	Active	2/6/1989	BASIN 8
2437	35-96_35-57	35-96	35-57	178	6	VITRIFIED CLAY PIPE	SANITARY SEWER	Active	1/1/1947	BASIN 8
2438	35-97_35-22	35-97	35-22	50	8	VITRIFIED CLAY PIPE	SANITARY SEWER	Active	1/1/1953	BASIN 8
2439	35-9R_35-8R	35-9R	35-8R	40	8	VITRIFIED CLAY PIPE	SANITARY SEWER	Active	1/1/1953	BASIN 7
2440	3-60_3-59	3-60	3-59	262	10	VITRIFIED CLAY PIPE	SANITARY SEWER	Active	1/1/1964	BASIN 2
2441	36-1_36-41	36-1	36-41	147	10	VITRIFIED CLAY PIPE	SANITARY SEWER	Active	1/1/1958	BASIN 8
2442	3-61_3-84	3-61	3-84	44	10	VITRIFIED CLAY PIPE	SANITARY SEWER	Active	1/1/1964	BASIN 2
2443	36-10_36-9	36-10	36-9	24	6	VITRIFIED CLAY PIPE	SANITARY SEWER	Active		BASIN 8

2444	36-100R_36-101	36-100R	36-101	100	6	VITRIFIED CLAY PIPE	SANITARY SEWER	Active	1/1/1944	BASIN 8
2446	36-101_36-5	36-101	36-5	152	6	VITRIFIED CLAY PIPE	SANITARY SEWER	Active	1/1/1944	BASIN 8
2447	36-102_36-101	36-102	36-101	334	8	VITRIFIED CLAY PIPE	SANITARY SEWER	Active	1/1/1980	BASIN 8
2448	36-11R_36-12	36-11R	36-12	46	8	VITRIFIED CLAY PIPE	SANITARY SEWER	Active	1/1/1958	BASIN 8
2449	36-12_36-13	36-12	36-13	367	8	VITRIFIED CLAY PIPE	SANITARY SEWER	Active	1/1/1958	BASIN 8
2450	36-13_36-14	36-13	36-14	124	8	VITRIFIED CLAY PIPE	SANITARY SEWER	Active	1/1/1958	BASIN 8
2451	36-14_36-15	36-14	36-15	300	8	VITRIFIED CLAY PIPE	SANITARY SEWER	Active	1/1/1958	BASIN 8
2452	36-15_36-17	36-15	36-17	271	8	VITRIFIED CLAY PIPE	SANITARY SEWER	Active	1/1/1958	BASIN 8
2453	36-16_36-15	36-16	36-15	138	8	VITRIFIED CLAY PIPE	SANITARY SEWER	Active	1/1/1958	BASIN 8
2454	36-17_36-26	36-17	36-26	227	8	VITRIFIED CLAY PIPE	SANITARY SEWER	Active	1/1/1958	BASIN 8
2455	36-18_36-19	36-18	36-19	160	8	VITRIFIED CLAY PIPE	SANITARY SEWER	Active	1/1/1966	BASIN 8
2456	36-19_36-20	36-19	36-20	87	8	VITRIFIED CLAY PIPE	SANITARY SEWER	Active	1/1/1966	BASIN 8
2457	3-62_3-58	3-62	3-58	145	8	VITRIFIED CLAY PIPE	SANITARY SEWER	Active	1/1/1951	BASIN 2
2458	36-2_36-1	36-2	36-1	39	10	VITRIFIED CLAY PIPE	SANITARY SEWER	Active	1/1/1958	BASIN 8
2459	36-20_36-23	36-20	36-23	184	8	VITRIFIED CLAY PIPE	SANITARY SEWER	Active	1/1/1966	BASIN 8
2460	36-21R_36-20	36-21R	36-20	185	8	VITRIFIED CLAY PIPE	SANITARY SEWER	Active	1/1/1966	BASIN 8
2461	36-22_26-24	36-22	36-24	120	8	VITRIFIED CLAY PIPE	SANITARY SEWER	Active	1/1/1965	BASIN 8
2462	36-23_36-24	36-23	36-24	214	8	VITRIFIED CLAY PIPE	SANITARY SEWER	Active	1/1/1966	BASIN 8
2463	36-24_36-28	36-24	36-28	300	8	VITRIFIED CLAY PIPE	SANITARY SEWER	Active	1/1/1965	BASIN 8
2464	36-25R_36-26	36-25R	36-26	221	8	VITRIFIED CLAY PIPE	SANITARY SEWER	Active	1/1/1959	BASIN 8
2465	36-26_36-27	36-26	36-27	247	8	VITRIFIED CLAY PIPE	SANITARY SEWER	Active	1/1/1958	BASIN 8
2466	36-27_36-29	36-27	36-29	156	8	VITRIFIED CLAY PIPE	SANITARY SEWER	Active	1/1/1958	BASIN 8
2467	36-28_36-29	36-28	36-29	19	8		SANITARY SEWER	Active	1/1/1966	BASIN 8
2468	36-29_36-43	36-29	36-43	291	8	VITRIFIED CLAY PIPE	SANITARY SEWER	Active	1/1/1958	BASIN 8
2469	36-3_36-2	36-3	36-2	269	10	VITRIFIED CLAY PIPE	SANITARY SEWER	Active	1/1/1958	BASIN 8
2470	3-63_3-62	3-63	3-62	323	8	VITRIFIED CLAY PIPE	SANITARY SEWER	Active	1/1/1951	BASIN 2
2471	36-30_36-44	36-30	36-44	143	8	VITRIFIED CLAY PIPE	SANITARY SEWER	Active	1/1/1961	BASIN 8
2472	36-32R_36-30	36-32R	36-30	26	8	VITRIFIED CLAY PIPE	SANITARY SEWER	Active	1/1/1961	BASIN 8
2473	36-33R_36-34	36-33R	36-34	119	8	VITRIFIED CLAY PIPE	SANITARY SEWER	Active	1/1/1960	BASIN 8
2474	36-34_36-30	36-34	36-30	180	8	VITRIFIED CLAY PIPE	SANITARY SEWER	Active	1/1/1960	BASIN 8
2475	36-35R_36-34	36-35R	36-34	216	8	VITRIFIED CLAY PIPE	SANITARY SEWER	Active	1/1/1960	BASIN 8
2476	36-36_29-103	36-36	29-103	695	6	VITRIFIED CLAY PIPE	SANITARY SEWER	Active	1/1/1944	BASIN 8
2477	36-37_36-22	36-37	36-22	74	8	HIGH DENSITY POLYETHYLENE	SANITARY SEWER	Active	8/16/2018	BASIN 8
2478	36-38_36-37	36-38	36-37	143	8	VARIABLE MATERIAL	SANITARY SEWER	Active	8/17/2018	BASIN 8
2479	3-64_3-30	3-64	3-30	31	8	VITRIFIED CLAY PIPE	SANITARY SEWER	Active		BASIN 2
2480	36-4_36-3	36-4	36-3	330	6	VITRIFIED CLAY PIPE	SANITARY SEWER	Active	1/1/1944	BASIN 8
2481	36-40_29-101	36-40	29-101	193	10	VITRIFIED CLAY PIPE	SANITARY SEWER	Active	1/1/1958	BASIN 8
2482	36-41_36-40	36-41	36-40	127	10	VITRIFIED CLAY PIPE	SANITARY SEWER	Active	1/1/1958	BASIN 8
2483	36-42_36-36	36-42	36-36	449	6	VITRIFIED CLAY PIPE	SANITARY SEWER	Active	1/1/1944	BASIN 8
2484	36-43_36-44	36-43	36-44	409	8	VITRIFIED CLAY PIPE	SANITARY SEWER	Active	1/1/1955	BASIN 8
2485	36-44_36-45	36-44	36-45	149	8	VITRIFIED CLAY PIPE	SANITARY SEWER	Active	1/1/1954	BASIN 8
2486	36-45_36-47	36-45	36-47	237	6	VITRIFIED CLAY PIPE	SANITARY SEWER	Active	1/1/1954	BASIN 8
2487	36-46_36-47	36-46	36-47	100	6	VITRIFIED CLAY PIPE	SANITARY SEWER	Active	1/1/1944	BASIN 8
2488	36-47_36-48	36-47	36-48	264	6	VITRIFIED CLAY PIPE	SANITARY SEWER	Active	1/1/1944	BASIN 8
2489	36-48_36-49	36-48	36-49	74	8	HIGH DENSITY POLYETHYLENE	SANITARY SEWER	Active	9/25/2017	BASIN 8
2490	36-49_36-50	36-49	36-50	318	6	VITRIFIED CLAY PIPE	SANITARY SEWER	Active	1/1/1944	BASIN 8
2491	3-65_10-115	3-65	10-115	245	8	VITRIFIED CLAY PIPE	SANITARY SEWER	Active	1/1/1951	BASIN 2
2492	36-5_36-4	36-5	36-4	152	6	VITRIFIED CLAY PIPE	SANITARY SEWER	Active	1/1/1944	BASIN 8
2493	3-65_3-66	3-65	3-66	263	8	VITRIFIED CLAY PIPE	SANITARY SEWER	Active	1/1/1951	BASIN 2
2494	36-50_36-82	36-50	36-82	390	6	VITRIFIED CLAY PIPE	SANITARY SEWER	Active	1/1/1944	BASIN 8
2495	36-51_36-52	36-51	36-52	346	6	VITRIFIED CLAY PIPE	SANITARY SEWER	Active	1/1/1950	BASIN 8
2496	36-52_29-85	36-52	29-85	345	6	VITRIFIED CLAY PIPE	SANITARY SEWER	Active	1/1/1950	BASIN 8
2497	36-53_29-72	36-53	29-72	326	8	VITRIFIED CLAY PIPE	SANITARY SEWER	Active		BASIN 8
2498	36-54_36-53	36-54	36-53	368	8	VITRIFIED CLAY PIPE	SANITARY SEWER	Active	1/1/1952	BASIN 8
2499	36-55_29-83	36-55	29-83	350	8	VITRIFIED CLAY PIPE	SANITARY SEWER	Active	1/1/1960	BASIN 8
2500	36-56_36-57	36-56	36-57	423	8	VITRIFIED CLAY PIPE	SANITARY SEWER	Active	1/1/1970	BASIN 9
2501	36-57_36-61	36-57	36-61	215	8	VITRIFIED CLAY PIPE	SANITARY SEWER	Active	1/1/1970	BASIN 9
2502	36-58_36-57	36-58	36-57	30	12	VITRIFIED CLAY PIPE	SANITARY SEWER	Active	1/1/1970	BASIN 9
2503	3-66_3-60	3-66	3-60	276	8	VITRIFIED CLAY PIPE	SANITARY SEWER	Active	1/1/1951	BASIN 2
2504	36-6_36-5	36-6	36-5	481	6	VITRIFIED CLAY PIPE	SANITARY SEWER	Active		BASIN 8
2505	36-61_36-62	36-61	36-62	150	15	ASBESTOS CEMENT PIPE	SANITARY SEWER	Active	1/1/1960	BASIN 9
2506	36-62_36-63	36-62	36-63	163	15	ASBESTOS CEMENT PIPE	SANITARY SEWER	Active	1/1/1960	BASIN 9
2507	36-63_36-73	36-63	36-73	342	15	ASBESTOS CEMENT PIPE	SANITARY SEWER	Active	1/1/1960	BASIN 9
2508	36-64_36-63	36-64	36-63	202	8	VITRIFIED CLAY PIPE	SANITARY SEWER	Active	1/1/1965	BASIN 9
2509	36-65R_36-64	36-65R	36-64	230	8	VITRIFIED CLAY PIPE	SANITARY SEWER	Active	1/1/1965	BASIN 9
2510	36-66_36-77	36-66	36-77	390	8	VITRIFIED CLAY PIPE	SANITARY SEWER	Active	1/1/1964	BASIN 9
2511	36-67_36-68	36-67	36-68	288	8	VITRIFIED CLAY PIPE	SANITARY SEWER	Active	1/1/1962	BASIN 9
2512	36-68_37-69	36-68	37-69	186	15	ASBESTOS CEMENT PIPE	SANITARY SEWER	Active	1/1/1960	BASIN 9
2513	36-69_36-68	36-69	36-68	224	15	ASBESTOS CEMENT PIPE	SANITARY SEWER	Active	1/1/1960	BASIN 9
2514	3-67_3-66	3-67	3-66	100	8	VITRIFIED CLAY PIPE	SANITARY SEWER	Active	1/1/1951	BASIN 2
2515	36-70_36-69	36-70	36-69	207	15	ASBESTOS CEMENT PIPE	SANITARY SEWER	Active	1/1/1960	BASIN 9
2516	36-71_36-70	36-71	36-70	193	15	ASBESTOS CEMENT PIPE	SANITARY SEWER	Active	1/1/1960	BASIN 9
2517	36-72_36-71	36-72	36-71	202	15	ASBESTOS CEMENT PIPE	SANITARY SEWER	Active	1/1/1960	BASIN 9

2518	36-73_36-72	36-73	36-72	168	15	ASBESTOS CEMENT PIPE	SANITARY SEWER	Active	1/1/1960	BASIN 9
2519	36-74R_36-9	36-74R	36-9	24	8	VITRIFIED CLAY PIPE	SANITARY SEWER	Active	1/1/1956	BASIN 8
2520	36-75_36-26	36-75	36-26	157	8	VITRIFIED CLAY PIPE	SANITARY SEWER	Active	1/1/1959	BASIN 8
2521	36-76_36-75	36-76	36-75	181	8	VITRIFIED CLAY PIPE	SANITARY SEWER	Active	1/1/1959	BASIN 8
2522	36-77_36-67	36-77	36-67	65	8	VITRIFIED CLAY PIPE	SANITARY SEWER	Active	1/1/1982	BASIN 9
2523	36-77R_36-43	36-77R	36-43	470	8	VITRIFIED CLAY PIPE	SANITARY SEWER	Active		BASIN 8
2524	36-7R_36-8	36-7R	36-8	152	8	VITRIFIED CLAY PIPE	SANITARY SEWER	Active	1/1/1956	BASIN 8
2525	36-8_36-17	36-8	36-17	383	8	VITRIFIED CLAY PIPE	SANITARY SEWER	Active	1/1/1958	BASIN 8
2526	3-68_3-67	3-68	3-67	146	8	VITRIFIED CLAY PIPE	SANITARY SEWER	Active	1/1/1951	BASIN 2
2527	36-82_29-76	36-82	29-76	336	6		SANITARY SEWER	Active		BASIN 8
2528	36-83_29-104	36-83	29-104	280	6	VITRIFIED CLAY PIPE	SANITARY SEWER	Active	1/1/1947	BASIN 8
2529	36-84R_36-83	36-84R	36-83	182	6	VITRIFIED CLAY PIPE	SANITARY SEWER	Active	1/1/1947	BASIN 8
2530	36-85_37-67	36-85	37-67	118	15	ASBESTOS CEMENT PIPE	SANITARY SEWER	Active	1/1/1960	BASIN 9
2531	36-9_36-8	36-9	36-8	234	8	VITRIFIED CLAY PIPE	SANITARY SEWER	Active	1/1/1956	BASIN 8
2532	3-69_3-68	3-69	3-68	90	8	VITRIFIED CLAY PIPE	SANITARY SEWER	Active	1/1/1951	BASIN 2
2533	3-6R_3-5	3-6R	3-5	135	6	VITRIFIED CLAY PIPE	SANITARY SEWER	Active	1/1/1952	BASIN 1
2534	3-7_3-96	3-7	3-96	116	6	VITRIFIED CLAY PIPE	SANITARY SEWER	Active		BASIN 1
2535	3-70_3-66	3-70	3-66	280	8	VITRIFIED CLAY PIPE	SANITARY SEWER	Active	1/1/1961	BASIN 2
2536	37-10_37-8	37-10	37-8	362	6	VITRIFIED CLAY PIPE	SANITARY SEWER	Active	1/1/1950	BASIN 8
2537	37-100_37-101	37-100	37-101	52	8	VITRIFIED CLAY PIPE	SANITARY SEWER	Active	1/1/1988	BASIN 9
2538	37-101_37-102	37-101	37-102	150	8	VITRIFIED CLAY PIPE	SANITARY SEWER	Active	1/1/1988	BASIN 9
2539	37-102_37-107	37-102	37-107	95	8	DUCTILE IRON PIPE	SANITARY SEWER	Active	1/1/1982	BASIN 9
2540	37-103_37-104	37-103	37-104	72	8	VITRIFIED CLAY PIPE	SANITARY SEWER	Active	1/1/1987	BASIN 9
2541	37-104_37-105	37-104	37-105	164	8	VITRIFIED CLAY PIPE	SANITARY SEWER	Active	1/1/1987	BASIN 9
2542	37-105_37-113	37-105	37-113	100	8	VITRIFIED CLAY PIPE	SANITARY SEWER	Active	1/1/1987	BASIN 9
2543	37-106_37-105	37-106	37-105	153	8	VITRIFIED CLAY PIPE	SANITARY SEWER	Active	1/1/1987	BASIN 9
2544	37-107_36-67	37-107	36-67	265	8	DUCTILE IRON PIPE	SANITARY SEWER	Active	1/1/1982	BASIN 9
2545	37-108R_36-77	37-108R	36-77	197	8	VITRIFIED CLAY PIPE	SANITARY SEWER	Active	1/1/1982	BASIN 9
2546	37-109_30-109	37-109	30-109	485	18	VITRIFIED CLAY PIPE	SANITARY SEWER	Active	1/1/1982	BASIN 11
2547	37-11_37-10	37-11	37-10	162	6	VITRIFIED CLAY PIPE	SANITARY SEWER	Active	1/1/1950	BASIN 8
2548	37-110_37-103	37-110	37-103	98	8	VITRIFIED CLAY PIPE	SANITARY SEWER	Active		BASIN 9
2549	37-111_37-110	37-111	37-110	232	8	VITRIFIED CLAY PIPE	SANITARY SEWER	Active		BASIN 9
2550	37-112_37-62	37-112	37-62	127	8	VITRIFIED CLAY PIPE	SANITARY SEWER	Active	1/1/1988	BASIN 9
2551	37-113_37-72	37-113	37-72	100	12	VITRIFIED CLAY PIPE	SANITARY SEWER	Active	1/1/1970	BASIN 9
2552	37-114R_37-6	37-114R	37-6	275	6		SANITARY SEWER	Active	1/1/1948	BASIN 8
2553	37-114Y_37-83	37-114Y	37-83	145	18	VITRIFIED CLAY PIPE	SANITARY SEWER	Active	7/30/2082	BASIN 9
2554	37-115Y_37-38	37-115Y	37-38	112	6	VITRIFIED CLAY PIPE	SANITARY SEWER	Active	1/1/1970	BASIN 11
2555	37-116Y_37-38	37-116Y	37-38	112	8	VITRIFIED CLAY PIPE	SANITARY SEWER	Active	1/1/1970	BASIN 11
2556	37-117Y_37-116Y	37-117Y	37-116Y	112	8	VITRIFIED CLAY PIPE	SANITARY SEWER	Active	1/1/1970	BASIN 11
2557	37-118Y_37-41	37-118Y	37-41	231	8	VITRIFIED CLAY PIPE	SANITARY SEWER	Active	1/1/1970	BASIN 11
2558	37-119R_37-118Y	37-119R	37-118Y	70	6	VITRIFIED CLAY PIPE	SANITARY SEWER	Active	1/1/1970	BASIN 11
2559	37-121_37-61	37-121	37-61	129	15	ASBESTOS CEMENT PIPE	SANITARY SEWER	Active	1/1/1960	BASIN 9
2560	37-122_37-121	37-122	37-121	109	8	HIGH DENSITY POLYETHYLENE	SANITARY SEWER	Active	11/9/2017	BASIN 9
2561	37-123_37-122	37-123	37-122	91	8	DUCTILE IRON PIPE	SANITARY SEWER	Active	2/15/2018	BASIN 9
2562	37-124_37-123	37-124	37-123	170	8	DUCTILE IRON PIPE	SANITARY SEWER	Active	9/7/2017	BASIN 9
2563	37-125_37-124	37-125	37-124	169	8	HIGH DENSITY POLYETHYLENE	SANITARY SEWER	Active	9/14/2017	BASIN 9
2564	37-126_37-125	37-126	37-125	101	8	HIGH DENSITY POLYETHYLENE	SANITARY SEWER	Active	9/14/2017	BASIN 9
2565	37-12R_37-11	37-12R	37-11	76	6	VITRIFIED CLAY PIPE	SANITARY SEWER	Active	1/1/1950	BASIN 8
2566	37-13_37-14	37-13	37-14	421	8	VITRIFIED CLAY PIPE	SANITARY SEWER	Active	1/1/1952	BASIN 8
2567	37-14_37-22	37-14	37-22	279	8	VITRIFIED CLAY PIPE	SANITARY SEWER	Active	1/1/1952	BASIN 8
2568	37-15_37-14	37-15	37-14	278	8	VITRIFIED CLAY PIPE	SANITARY SEWER	Active	1/1/1952	BASIN 8
2569	37-16R_37-15	37-16R	37-15	140	8	VITRIFIED CLAY PIPE	SANITARY SEWER	Active	1/1/1952	BASIN 8
2570	37-17_37-19	37-17	37-19	420	8	VITRIFIED CLAY PIPE	SANITARY SEWER	Active	1/1/1952	BASIN 8
2571	37-18_37-19	37-18	37-19	30	8	VITRIFIED CLAY PIPE	SANITARY SEWER	Active	1/1/1952	BASIN 8
2572	37-19_37-21	37-19	37-21	278	6	VITRIFIED CLAY PIPE	SANITARY SEWER	Active	1/1/1952	BASIN 8
2573	3-71R_3-70	3-71R	3-70	117	8	VITRIFIED CLAY PIPE	SANITARY SEWER	Active	1/1/1951	BASIN 2
2574	3-72_3-61	3-72	3-61	312	10	VITRIFIED CLAY PIPE	SANITARY SEWER	Active	1/1/1964	BASIN 2
2575	37-20R_30-22	37-20R	30-22	326	6	VITRIFIED CLAY PIPE	SANITARY SEWER	Active	1/1/1946	BASIN 8
2576	37-21_37-23	37-21	37-23	231	6	VITRIFIED CLAY PIPE	SANITARY SEWER	Active	1/1/1944	BASIN 8
2577	37-22_37-21	37-22	37-21	280	8	VITRIFIED CLAY PIPE	SANITARY SEWER	Active	1/1/1952	BASIN 8
2578	37-23_37-3	37-23	37-3	361	6	VITRIFIED CLAY PIPE	SANITARY SEWER	Active	1/1/1944	BASIN 8
2579	37-24R_37-25	37-24R	37-25	158	8	VITRIFIED CLAY PIPE	SANITARY SEWER	Active	1/1/1957	BASIN 8
2580	37-25_30-20	37-25	30-20	301	8	VITRIFIED CLAY PIPE	SANITARY SEWER	Active	1/1/1957	BASIN 8
2581	37-26_37-25	37-26	37-25	170	8	VITRIFIED CLAY PIPE	SANITARY SEWER	Active	1/1/1957	BASIN 8
2582	37-27R_36-83	37-27R	36-83	172	6	VITRIFIED CLAY PIPE	SANITARY SEWER	Active	1/1/1946	BASIN 8
2583	37-3_36-50	37-3	36-50	137	6	VITRIFIED CLAY PIPE	SANITARY SEWER	Active	2/1/2002	BASIN 8
2584	3-73_3-72	3-73	3-72	277	8	VITRIFIED CLAY PIPE	SANITARY SEWER	Active	1/1/1956	BASIN 2
2585	37-32_37-33	37-32	37-33	260	6	VITRIFIED CLAY PIPE	SANITARY SEWER	Active	1/1/1944	BASIN 11
2586	37-33_37-45	37-33	37-45	187	6	VITRIFIED CLAY PIPE	SANITARY SEWER	Active	1/1/1944	BASIN 11
2587	37-34_37-33	37-34	37-33	112	8	VITRIFIED CLAY PIPE	SANITARY SEWER	Active	1/1/1970	BASIN 11
2588	37-34_37-36	37-34	37-36	171	3	VITRIFIED CLAY PIPE	OVERFLOW	Active	1/1/1970	BASIN 11
2589	37-35R_37-36	37-35R	37-36	97	8	VITRIFIED CLAY PIPE	SANITARY SEWER	Active	1/1/1970	BASIN 11
2590	37-35S_37-36	37-35S	37-36	60	6	VITRIFIED CLAY PIPE	SANITARY SEWER	Active	1/1/1970	BASIN 11

2591	37-36_37-38	37-36	37-38	112	8		SANITARY SEWER	Active		BASIN 11
2592	37-37R_37-36	37-37R	37-36	112	8	VITRIFIED CLAY PIPE	SANITARY SEWER	Active	1/1/1970	BASIN 11
2593	37-37S_37-36	37-37S	37-36	92	6	VITRIFIED CLAY PIPE	SANITARY SEWER	Active	1/1/1970	BASIN 11
2594	37-38_37-91	37-38	37-91	193	8	VITRIFIED CLAY PIPE	SANITARY SEWER	Active	1/1/1985	BASIN 11
2595	37-39R_37-117Y	37-39R	37-117Y	124	6	VITRIFIED CLAY PIPE	SANITARY SEWER	Active		BASIN 11
2596	37-4_37-3	37-4	37-3	270	6	VITRIFIED CLAY PIPE	SANITARY SEWER	Active	1/1/1948	BASIN 8
2597	3-74_3-73	3-74	3-73	182	8	VITRIFIED CLAY PIPE	SANITARY SEWER	Active	1/1/1956	BASIN 2
2598	37-40R_37-116Y	37-40R	37-116Y	117	6	VITRIFIED CLAY PIPE	SANITARY SEWER	Active		BASIN 11
2600	37-41_37-117Y	37-41	37-117Y	112	8	VITRIFIED CLAY PIPE	SANITARY SEWER	Active	1/1/1970	BASIN 11
2601	37-42R_37-41	37-42R	37-41	190	8	VITRIFIED CLAY PIPE	SANITARY SEWER	Active	1/1/1970	BASIN 11
2602	37-43_37-118Y	37-43	37-118Y	231	8	VITRIFIED CLAY PIPE	SANITARY SEWER	Active	1/1/1970	BASIN 11
2603	37-43R_37-43	37-43R	37-43	75	6	VITRIFIED CLAY PIPE	SANITARY SEWER	Active	1/1/1970	BASIN 11
2604	37-44R_37-43	37-44R	37-43	145	6	VITRIFIED CLAY PIPE	SANITARY SEWER	Active	1/1/1970	BASIN 11
2605	37-45_37-46	37-45	37-46	202	6	VITRIFIED CLAY PIPE	SANITARY SEWER	Active	1/1/1944	BASIN 11
2606	37-46_37-92	37-46	37-92	40	12	VITRIFIED CLAY PIPE	SANITARY SEWER	Active	1/1/1982	BASIN 11
2607	37-5R_37-4	37-5R	37-4	190	6	VITRIFIED CLAY PIPE	SANITARY SEWER	Active	1/1/1948	BASIN 8
2608	3-75R_3-74	3-75R	3-74	197	8	VITRIFIED CLAY PIPE	SANITARY SEWER	Active	1/1/1956	BASIN 2
2609	37-6_37-4	37-6	37-4	290	6	VITRIFIED CLAY PIPE	SANITARY SEWER	Active	1/1/1948	BASIN 8
2610	37-61_37-114Y	37-61	37-114Y	172	15	ASBESTOS CEMENT PIPE	SANITARY SEWER	Active	1/1/1960	BASIN 9
2611	37-62_37-121	37-62	37-121	232	15	ASBESTOS CEMENT PIPE	SANITARY SEWER	Active	1/1/1960	BASIN 9
2612	37-63_37-62	37-63	37-62	202	15	ASBESTOS CEMENT PIPE	SANITARY SEWER	Active	1/1/1960	BASIN 9
2613	37-64_37-63	37-64	37-63	184	15	ASBESTOS CEMENT PIPE	SANITARY SEWER	Active	1/1/1960	BASIN 9
2614	37-65_37-64	37-65	37-64	140	15	ASBESTOS CEMENT PIPE	SANITARY SEWER	Active	1/1/1960	BASIN 9
2615	37-66_37-65	37-66	37-65	126	15	ASBESTOS CEMENT PIPE	SANITARY SEWER	Active	1/1/1960	BASIN 9
2616	37-67_37-66	37-67	37-66	169	15	ASBESTOS CEMENT PIPE	SANITARY SEWER	Active	1/1/1960	BASIN 9
2617	37-69_36-85	37-69	36-85	47	15	ASBESTOS CEMENT PIPE	SANITARY SEWER	Active	1/1/1960	BASIN 9
2618	37-72_37-114Y	37-72	37-114Y	415	12	VITRIFIED CLAY PIPE	SANITARY SEWER	Active	1/1/1970	BASIN 9
2619	37-73_37-113	37-73	37-113	267	12	VITRIFIED CLAY PIPE	SANITARY SEWER	Active	1/1/1969	BASIN 9
2620	37-74_37-73	37-74	37-73	266	12	VITRIFIED CLAY PIPE	SANITARY SEWER	Active	1/1/1969	BASIN 9
2621	37-76_37-74	37-76	37-74	71	15	VITRIFIED CLAY PIPE	SANITARY SEWER	Active	1/1/1969	BASIN 9
2622	37-77_37-76	37-77	37-76	124	15	VITRIFIED CLAY PIPE	SANITARY SEWER	Active	1/1/1969	BASIN 9
2623	37-7R_37-6	37-7R	37-6	364	6	VITRIFIED CLAY PIPE	SANITARY SEWER	Active	1/1/1948	BASIN 8
2624	37-8_37-6	37-8	37-6	275	6	VITRIFIED CLAY PIPE	SANITARY SEWER	Active	1/1/1948	BASIN 8
2625	37-80_37-77	37-80	37-77	190	15		SANITARY SEWER	Active		BASIN 9
2626	37-83_37-84	37-83	37-84	436	18	VITRIFIED CLAY PIPE	SANITARY SEWER	Active	1/1/1982	BASIN 9
2627	37-84_37-85	37-84	37-85	590	18	VITRIFIED CLAY PIPE	SANITARY SEWER	Active	1/1/1982	BASIN 9
2628	37-85_37-86	37-85	37-86	130	18	VITRIFIED CLAY PIPE	SANITARY SEWER	Active	1/1/1982	BASIN 11
2629	37-86_37-89	37-86	37-89	25	18	VITRIFIED CLAY PIPE	SANITARY SEWER	Active	1/1/1982	BASIN 11
2630	37-87_37-86	37-87	37-86	250	10	DUCTILE IRON PIPE	SANITARY SEWER	Active	1/1/1982	BASIN 11
2631	37-89_37-90	37-89	37-90	318	18	VITRIFIED CLAY PIPE	SANITARY SEWER	Active	1/1/1982	BASIN 11
2632	3-79_3-69	3-79	3-69	194	8	VITRIFIED CLAY PIPE	SANITARY SEWER	Active	1/1/1951	BASIN 2
2633	37-90_37-109	37-90	37-109	485	18	VITRIFIED CLAY PIPE	SANITARY SEWER	Active	1/1/1982	BASIN 11
2634	37-91_37-90	37-91	37-90	68	8	VITRIFIED CLAY PIPE	SANITARY SEWER	Active	1/1/1985	BASIN 11
2635	37-92_30-110	37-92	30-110	378	12	VITRIFIED CLAY PIPE	SANITARY SEWER	Active	1/1/1982	BASIN 11
2636	37-94_37-95	37-94	37-95	257	8	VITRIFIED CLAY PIPE	SANITARY SEWER	Active	1/1/1988	BASIN 9
2637	37-95_37-96	37-95	37-96	257	8	VITRIFIED CLAY PIPE	SANITARY SEWER	Active	1/1/1988	BASIN 9
2638	37-96_37-100	37-96	37-100	278	8	VITRIFIED CLAY PIPE	SANITARY SEWER	Active	1/1/1988	BASIN 9
2639	37-97_37-98	37-97	37-98	237	8	VITRIFIED CLAY PIPE	SANITARY SEWER	Active	1/1/1988	BASIN 9
2640	37-98_37-99	37-98	37-99	215	8	VITRIFIED CLAY PIPE	SANITARY SEWER	Active	1/1/1988	BASIN 9
2641	37-99_37-100	37-99	37-100	40	8	VITRIFIED CLAY PIPE	SANITARY SEWER	Active	1/1/1988	BASIN 9
2642	37-9R_37-8	37-9R	37-8	300	6	VITRIFIED CLAY PIPE	SANITARY SEWER	Active	1/1/1948	BASIN 8
2643	3-8_3-7	3-8	3-7	57	8	VITRIFIED CLAY PIPE	SANITARY SEWER	Active	1/1/1956	BASIN 1
2644	3-80_3-32	3-80	3-32	132	6	VITRIFIED CLAY PIPE	SANITARY SEWER	Active	1/1/1988	BASIN 2
2645	3-81_3-80	3-81	3-80	254	8	VITRIFIED CLAY PIPE	SANITARY SEWER	Active	1/1/1988	BASIN 2
2646	38-1_38-2	38-1	38-2	330	8	VITRIFIED CLAY PIPE	SANITARY SEWER	Active	1/1/1953	BASIN 10
2647	38-10_38-15	38-10	38-15	240	10	VITRIFIED CLAY PIPE	SANITARY SEWER	Active	1/1/1982	BASIN 11
2648	38-11_38-4	38-11	38-4	180	6	VITRIFIED CLAY PIPE	SANITARY SEWER	Active	1/1/1991	BASIN 10
2649	38-11R_38-5	38-11R	38-5	105	6	VITRIFIED CLAY PIPE	SANITARY SEWER	Active	1/1/1968	BASIN 10
2650	38-12_38-11	38-12	38-11	217	8	DUCTILE IRON PIPE	SANITARY SEWER	Active	1/1/1991	BASIN 10
2651	38-15_37-87	38-15	37-87	360	10	DUCTILE IRON PIPE	SANITARY SEWER	Active	1/1/1982	BASIN 11
2652	3-82_3-81	3-82	3-81	67	8	VITRIFIED CLAY PIPE	SANITARY SEWER	Active	1/1/1988	BASIN 2
2653	38-2_38-4	38-2	38-4	210	8	VITRIFIED CLAY PIPE	SANITARY SEWER	Active	1/1/1953	BASIN 10
2654	3-83_3-81	3-83	3-81	249	8	VITRIFIED CLAY PIPE	SANITARY SEWER	Active	1/1/1988	BASIN 2
2655	38-3R_38-2	38-3R	38-2	50	8	VITRIFIED CLAY PIPE	SANITARY SEWER	Active	1/1/1953	BASIN 10
2656	3-84_3-60	3-84	3-60	88	10	VITRIFIED CLAY PIPE	SANITARY SEWER	Active	1/1/1984	BASIN 2
2657	38-4_38-6	38-4	38-6	135	6	VITRIFIED CLAY PIPE	SANITARY SEWER	Active	1/1/1968	BASIN 10
2658	38-5_38-11	38-5	38-11	73	6	VITRIFIED CLAY PIPE	SANITARY SEWER	Active	1/1/1968	BASIN 10
2659	3-85_3-84	3-85	3-84	306	8	VITRIFIED CLAY PIPE	SANITARY SEWER	Active	1/1/1984	BASIN 2
2660	38-6_38-8	38-6	38-8	197	6	VITRIFIED CLAY PIPE	SANITARY SEWER	Active	1/1/1968	BASIN 10
2661	3-87_3-38	3-87	3-38	114	8	VITRIFIED CLAY PIPE	SANITARY SEWER	Active	1/1/1956	BASIN 2
2662	38-7_38-6	38-7	38-6	73	6	VITRIFIED CLAY PIPE	SANITARY SEWER	Active	1/1/1968	BASIN 10
2663	38-8_31-59	38-8	31-59	455	6	VITRIFIED CLAY PIPE	SANITARY SEWER	Active	1/1/1968	BASIN 10
2664	3-88_3-87	3-88	3-87	62	8	VITRIFIED CLAY PIPE	SANITARY SEWER	Active	1/1/1956	BASIN 2

2665	3-89_3-82	3-89	3-82	150	8	VITRIFIED CLAY PIPE	SANITARY SEWER	Active	7/9/1999	BASIN 2
2666	3-9_3-8	3-9	3-8	454	8	VITRIFIED CLAY PIPE	SANITARY SEWER	Active	1/1/1956	BASIN 1
2667	3-90_3-89	3-90	3-89	102	8	VITRIFIED CLAY PIPE	SANITARY SEWER	Active	9/22/1999	BASIN 2
2668	3-91_3-90	3-91	3-90	66	8	VITRIFIED CLAY PIPE	SANITARY SEWER	Active	7/9/1999	BASIN 2
2669	39-1_40-1	39-1	40-1	325	8	VITRIFIED CLAY PIPE	SANITARY SEWER	Active	1/1/1960	BASIN 9
2670	39-10_39-8	39-10	39-8	497	8	VITRIFIED CLAY PIPE	SANITARY SEWER	Active	1/1/1960	BASIN 9
2671	39-11_39-10	39-11	39-10	170	8	VITRIFIED CLAY PIPE	SANITARY SEWER	Active	1/1/1961	BASIN 9
2672	39-12_39-13	39-12	39-13	328	8	VITRIFIED CLAY PIPE	SANITARY SEWER	Active	1/1/1976	BASIN 9
2673	39-13_40-57	39-13	40-57	223	8	VITRIFIED CLAY PIPE	SANITARY SEWER	Active	1/1/1976	BASIN 9
2674	39-14_39-10	39-14	39-10	310	8	VITRIFIED CLAY PIPE	SANITARY SEWER	Active	1/1/1960	BASIN 9
2675	39-15_39-14	39-15	39-14	25	8	VITRIFIED CLAY PIPE	SANITARY SEWER	Active		BASIN 9
2676	39-16_39-15	39-16	39-15	80	8	VITRIFIED CLAY PIPE	SANITARY SEWER	Active	1/1/1975	BASIN 9
2677	39-17_39-16	39-17	39-16	162	8	VITRIFIED CLAY PIPE	SANITARY SEWER	Active	1/1/1975	BASIN 9
2678	39-18_39-19	39-18	39-19	270	8	VITRIFIED CLAY PIPE	SANITARY SEWER	Active	1/1/1975	BASIN 9
2679	39-19_39-14	39-19	39-14	480	8	VITRIFIED CLAY PIPE	SANITARY SEWER	Active	1/1/1974	BASIN 9
2680	39-2_39-1	39-2	39-1	334	8	VITRIFIED CLAY PIPE	SANITARY SEWER	Active	1/1/1960	BASIN 9
2681	3-92_3-91	3-92	3-91	66	8	VITRIFIED CLAY PIPE	SANITARY SEWER	Active	7/9/1999	BASIN 2
2682	39-20_39-19	39-20	39-19	320	8	VITRIFIED CLAY PIPE	SANITARY SEWER	Active	1/1/1974	BASIN 9
2683	39-21_39-22	39-21	39-22	415	8	VITRIFIED CLAY PIPE	SANITARY SEWER	Active	1/1/1973	BASIN 9
2684	39-22_39-24	39-22	39-24	115	8	VITRIFIED CLAY PIPE	SANITARY SEWER	Active	1/1/1964	BASIN 9
2685	39-23_39-22	39-23	39-22	345	8	VITRIFIED CLAY PIPE	SANITARY SEWER	Active	1/1/1973	BASIN 9
2686	39-24_39-25	39-24	39-25	230	8	VITRIFIED CLAY PIPE	SANITARY SEWER	Active	1/1/1964	BASIN 9
2687	39-25_39-26	39-25	39-26	302	8	VITRIFIED CLAY PIPE	SANITARY SEWER	Active	1/1/1964	BASIN 9
2688	39-26_39-27	39-26	39-27	301	8	VITRIFIED CLAY PIPE	SANITARY SEWER	Active	1/1/1964	BASIN 9
2689	39-27_40-20	39-27	40-20	300	8	VITRIFIED CLAY PIPE	SANITARY SEWER	Active	1/1/1964	BASIN 9
2690	39-3_39-2	39-3	39-2	286	8	VITRIFIED CLAY PIPE	SANITARY SEWER	Active	1/1/1960	BASIN 9
2691	3-93_3-92	3-93	3-92	72	8	VITRIFIED CLAY PIPE	SANITARY SEWER	Active	7/6/1999	BASIN 2
2692	39-32_40-30	39-32	40-30	385	8	VITRIFIED CLAY PIPE	SANITARY SEWER	Active	1/1/1978	BASIN 9
2693	39-33_39-35	39-33	39-35	170	8	VITRIFIED CLAY PIPE	SANITARY SEWER	Active	1/1/1978	BASIN 9
2694	39-34_39-35	39-34	39-35	100	8	VITRIFIED CLAY PIPE	SANITARY SEWER	Active	1/1/1978	BASIN 9
2695	39-35_39-36	39-35	39-36	266	8	VITRIFIED CLAY PIPE	SANITARY SEWER	Active	1/1/1978	BASIN 9
2696	39-36_39-37	39-36	39-37	269	8	VITRIFIED CLAY PIPE	SANITARY SEWER	Active	1/1/1978	BASIN 9
2699	39-37_40-52	39-37	40-52	308	8	VITRIFIED CLAY PIPE	SANITARY SEWER	Active	1/1/1978	BASIN 9
2700	39-38_39-37	39-38	39-37	200	8	VITRIFIED CLAY PIPE	SANITARY SEWER	Active	1/1/1978	BASIN 9
2701	39-4_39-3	39-4	39-3	50	8	VITRIFIED CLAY PIPE	SANITARY SEWER	Active	1/1/1960	BASIN 9
2702	3-94_3-93	3-94	3-93	162	8	VITRIFIED CLAY PIPE	SANITARY SEWER	Active	7/6/1999	BASIN 2
2703	39-5_39-3	39-5	39-3	150	8	DUCTILE IRON PIPE	SANITARY SEWER	Active	1/1/1975	BASIN 9
2704	3-95_3-96	3-95	3-96	167	8	VITRIFIED CLAY PIPE	SANITARY SEWER	Active	8/10/1999	BASIN 1
2705	3-96_3-3	3-96	3-3	167	6	VITRIFIED CLAY PIPE	SANITARY SEWER	Active		BASIN 1
2707	39-6_39-5	39-6	39-5	137	8	DUCTILE IRON PIPE	SANITARY SEWER	Active	1/1/1975	BASIN 9
2708	39-7_39-6	39-7	39-6	490	8	VITRIFIED CLAY PIPE	SANITARY SEWER	Active	1/1/1975	BASIN 9
2709	39-8_40-11	39-8	40-11	364	8	VITRIFIED CLAY PIPE	SANITARY SEWER	Active	1/1/1960	BASIN 9
2710	39-9R_39-8	39-9R	39-8	81	6	VITRIFIED CLAY PIPE	SANITARY SEWER	Active	1/1/1960	BASIN 9
2711	40-1_40-2	40-1	40-2	350	8	VITRIFIED CLAY PIPE	SANITARY SEWER	Active	1/1/1960	BASIN 9
2712	40-10_40-9	40-10	40-9	255	8	VITRIFIED CLAY PIPE	SANITARY SEWER	Active	1/1/1959	BASIN 9
2713	40-11_40-10	40-11	40-10	346	8	VITRIFIED CLAY PIPE	SANITARY SEWER	Active	1/1/1959	BASIN 9
2714	40-12_40-10	40-12	40-10	115	8	VITRIFIED CLAY PIPE	SANITARY SEWER	Active	1/1/1959	BASIN 9
2715	40-13_41-22	40-13	41-22	330	8	VITRIFIED CLAY PIPE	SANITARY SEWER	Active	1/1/1964	BASIN 9
2716	40-14_40-13	40-14	40-13	327	8	VITRIFIED CLAY PIPE	SANITARY SEWER	Active	1/1/1964	BASIN 9
2717	40-15_40-14	40-15	40-14	327	8	VITRIFIED CLAY PIPE	SANITARY SEWER	Active	1/1/1964	BASIN 9
2718	40-16_40-15	40-16	40-15	327	8	VITRIFIED CLAY PIPE	SANITARY SEWER	Active	1/1/1964	BASIN 9
2719	40-17_40-16	40-17	40-16	207	8	VITRIFIED CLAY PIPE	SANITARY SEWER	Active	1/1/1964	BASIN 9
2720	40-18_40-17	40-18	40-17	120	8	VITRIFIED CLAY PIPE	SANITARY SEWER	Active	1/1/1964	BASIN 9
2721	40-19_40-18	40-19	40-18	356	8	VITRIFIED CLAY PIPE	SANITARY SEWER	Active	1/1/1964	BASIN 9
2722	40-2_40-3	40-2	40-3	327	8	VITRIFIED CLAY PIPE	SANITARY SEWER	Active	1/1/1960	BASIN 9
2723	40-20_40-21	40-20	40-21	182	8	VITRIFIED CLAY PIPE	SANITARY SEWER	Active	1/1/1964	BASIN 9
2724	40-21_40-22	40-21	40-22	209	8		TRUNK LINE	Active		BASIN 9
2725	40-22_40-18	40-22	40-18	210	8	VITRIFIED CLAY PIPE	SANITARY SEWER	Active	1/1/1964	BASIN 9
2726	40-23_40-17	40-23	40-17	129	8	VITRIFIED CLAY PIPE	SANITARY SEWER	Active	1/1/1964	BASIN 9
2727	40-24_40-23	40-24	40-23	132	8	VITRIFIED CLAY PIPE	SANITARY SEWER	Active	1/1/1964	BASIN 9
2728	40-25_40-24	40-25	40-24	188	8	VITRIFIED CLAY PIPE	SANITARY SEWER	Active	1/1/1964	BASIN 9
2729	40-26R_40-25	40-26R	40-25	146	8	VITRIFIED CLAY PIPE	SANITARY SEWER	Active	1/1/1964	BASIN 9
2730	40-27R_40-28	40-27R	40-28	307	8	VITRIFIED CLAY PIPE	SANITARY SEWER	Active	1/1/1964	BASIN 9
2731	40-28_44-8	40-28	44-8	300	8	VITRIFIED CLAY PIPE	SANITARY SEWER	Active	1/1/1964	BASIN 9
2732	40-29_40-30	40-29	40-30	195	8	VITRIFIED CLAY PIPE	SANITARY SEWER	Active	1/1/1978	BASIN 9
2733	40-3_40-5	40-3	40-5	224	8	VITRIFIED CLAY PIPE	SANITARY SEWER	Active	1/1/1960	BASIN 9
2734	40-30_40-31	40-30	40-31	315	8	VITRIFIED CLAY PIPE	SANITARY SEWER	Active	1/1/1978	BASIN 9
2735	40-31_40-32	40-31	40-32	317	8	VITRIFIED CLAY PIPE	SANITARY SEWER	Active	1/1/1978	BASIN 9
2736	40-32_40-34	40-32	40-34	283	8	VITRIFIED CLAY PIPE	SANITARY SEWER	Active	1/1/1978	BASIN 9
2737	40-33_40-32	40-33	40-32	350	8	VITRIFIED CLAY PIPE	SANITARY SEWER	Active	1/1/1978	BASIN 9
2738	40-34_40-35	40-34	40-35	300	8	VITRIFIED CLAY PIPE	SANITARY SEWER	Active	1/1/1978	BASIN 9
2739	40-35_40-36	40-35	40-36	275	8	VITRIFIED CLAY PIPE	SANITARY SEWER	Active	1/1/1978	BASIN 9
2740	40-36_40-37	40-36	40-37	345	8	VITRIFIED CLAY PIPE	SANITARY SEWER	Active	1/1/1978	BASIN 9

2741	40-37_40-48	40-37	40-48	393	8	DUCTILE IRON PIPE	SANITARY SEWER	Active	1/1/1978	BASIN 9
2742	40-38_40-37	40-38	40-37	200	8	VITRIFIED CLAY PIPE	SANITARY SEWER	Active	1/1/1978	BASIN 9
2743	40-39_40-38	40-39	40-38	202	8	VITRIFIED CLAY PIPE	SANITARY SEWER	Active	1/1/1978	BASIN 9
2744	40-4_40-3	40-4	40-3	199	6	VITRIFIED CLAY PIPE	SANITARY SEWER	Active	1/1/1960	BASIN 9
2745	40-40_40-37	40-40	40-37	200	8	VITRIFIED CLAY PIPE	SANITARY SEWER	Active	1/1/1978	BASIN 9
2746	40-41_40-40	40-41	40-40	385	8	VITRIFIED CLAY PIPE	SANITARY SEWER	Active	1/1/1978	BASIN 9
2747	40-42_40-43	40-42	40-43	168	8	VITRIFIED CLAY PIPE	SANITARY SEWER	Active	1/1/1978	BASIN 9
2748	40-43_40-45	40-43	40-45	338	8	VITRIFIED CLAY PIPE	SANITARY SEWER	Active	1/1/1978	BASIN 9
2749	40-44_40-43	40-44	40-43	185	8	VITRIFIED CLAY PIPE	SANITARY SEWER	Active	1/1/1978	BASIN 9
2750	40-45_40-46	40-45	40-46	288	8	VITRIFIED CLAY PIPE	SANITARY SEWER	Active	1/1/1978	BASIN 9
2751	40-46_40-47	40-46	40-47	259	8	VITRIFIED CLAY PIPE	SANITARY SEWER	Active	1/1/1978	BASIN 9
2752	40-47_40-48	40-47	40-48	70	8	VITRIFIED CLAY PIPE	SANITARY SEWER	Active	1/1/1978	BASIN 9
2753	40-48_34-59	40-48	34-59	550	8	DUCTILE IRON PIPE	SANITARY SEWER	Active	1/1/1978	BASIN 9
2754	40-49_40-50	40-49	40-50	290	8	VITRIFIED CLAY PIPE	SANITARY SEWER	Active	1/1/1978	BASIN 9
2755	40-5_40-6	40-5	40-6	300	8	VITRIFIED CLAY PIPE	SANITARY SEWER	Active	1/1/1959	BASIN 9
2756	40-50_40-51	40-50	40-51	205	8	VITRIFIED CLAY PIPE	SANITARY SEWER	Active	1/1/1978	BASIN 9
2757	40-51_40-52	40-51	40-52	198	8	VITRIFIED CLAY PIPE	SANITARY SEWER	Active	1/1/1978	BASIN 9
2758	40-52_40-53	40-52	40-53	375	8	VITRIFIED CLAY PIPE	SANITARY SEWER	Active	1/1/1978	BASIN 9
2759	40-53_40-54	40-53	40-54	350	8	VITRIFIED CLAY PIPE	SANITARY SEWER	Active	1/1/1978	BASIN 9
2760	40-54_40-55	40-54	40-55	350	8	VITRIFIED CLAY PIPE	SANITARY SEWER	Active	1/1/1978	BASIN 9
2761	40-55_34-61	40-55	34-61	375	8	VITRIFIED CLAY PIPE	SANITARY SEWER	Active	1/1/1978	BASIN 9
2762	40-56_40-57	40-56	40-57	142	8	VITRIFIED CLAY PIPE	SANITARY SEWER	Active	1/1/1976	BASIN 9
2763	40-57_40-19	40-57	40-19	112	8	VITRIFIED CLAY PIPE	SANITARY SEWER	Active	1/1/1976	BASIN 9
2764	40-58_41-22	40-58	41-22	292	8	VITRIFIED CLAY PIPE	SANITARY SEWER	Active	1/1/1964	BASIN 9
2765	40-59_40-60	40-59	40-60	110	8	VITRIFIED CLAY PIPE	SANITARY SEWER	Active	1/1/1964	BASIN 9
2766	40-6_40-7	40-6	40-7	300	8	VITRIFIED CLAY PIPE	SANITARY SEWER	Active	1/1/1959	BASIN 9
2767	40-60_40-21	40-60	40-21	110	8	VITRIFIED CLAY PIPE	SANITARY SEWER	Active	1/1/1964	BASIN 9
2768	40-7_40-8	40-7	40-8	300	8	VITRIFIED CLAY PIPE	SANITARY SEWER	Active	1/1/1959	BASIN 9
2769	40-8_41-1	40-8	41-1	300	8	VITRIFIED CLAY PIPE	SANITARY SEWER	Active	1/1/1960	BASIN 9
2770	40-9_40-5	40-9	40-5	200	8	VITRIFIED CLAY PIPE	SANITARY SEWER	Active	1/1/1959	BASIN 9
2771	4-1_4-8	4-1	4-8	56	6	VITRIFIED CLAY PIPE	SANITARY SEWER	Active	1/1/1951	BASIN 1
2772	4-10_4-49	4-10	4-49	350	6	VITRIFIED CLAY PIPE	SANITARY SEWER	Active	1/1/1944	BASIN 1
2773	4-11_4-10	4-11	4-10	100	6	VITRIFIED CLAY PIPE	SANITARY SEWER	Active	1/1/1944	BASIN 1
2774	41-1_41-2	41-1	41-2	300	8	VITRIFIED CLAY PIPE	SANITARY SEWER	Active	1/1/1960	BASIN 9
2775	41-10_42-14	41-10	42-14	323	8	VITRIFIED CLAY PIPE	SANITARY SEWER	Active	1/1/1960	BASIN 9
2776	41-11_42-17	41-11	42-17	273	8	VITRIFIED CLAY PIPE	SANITARY SEWER	Active		BASIN 9
2777	41-12_42-73	41-12	42-73	191	14	ASBESTOS CEMENT PIPE	SANITARY SEWER	Active	1/1/1965	BASIN 9
2778	41-13_41-24	41-13	41-24	120	14	ASBESTOS CEMENT PIPE	SANITARY SEWER	Active		BASIN 9
2779	41-14_41-13	41-14	41-13	143	14	ASBESTOS CEMENT PIPE	SANITARY SEWER	Active	1/1/1965	BASIN 9
2780	41-15_41-14	41-15	41-14	30	12	ASBESTOS CEMENT PIPE	SANITARY SEWER	Active	1/1/1965	BASIN 9
2781	41-16_41-15	41-16	41-15	229	12	ASBESTOS CEMENT PIPE	SANITARY SEWER	Active	1/1/1965	BASIN 9
2782	41-17_41-18	41-17	41-18	250	8		SANITARY SEWER	Active		BASIN 9
2783	41-18_41-19	41-18	41-19	142	8	VITRIFIED CLAY PIPE	SANITARY SEWER	Active	1/1/1965	BASIN 9
2784	41-19_45-4	41-19	45-4	249	8	VITRIFIED CLAY PIPE	SANITARY SEWER	Active	1/1/1964	BASIN 9
2785	41-2_41-3	41-2	41-3	300	8	VITRIFIED CLAY PIPE	SANITARY SEWER	Active	1/1/1960	BASIN 9
2786	41-20_41-19	41-20	41-19	337	8	VITRIFIED CLAY PIPE	SANITARY SEWER	Active	1/1/1964	BASIN 9
2787	41-21_41-20	41-21	41-20	219	8	VITRIFIED CLAY PIPE	SANITARY SEWER	Active	1/1/1964	BASIN 9
2788	41-22_41-21	41-22	41-21	216	8	VITRIFIED CLAY PIPE	SANITARY SEWER	Active	1/1/1964	BASIN 9
2789	41-24_41-12	41-24	41-12	135	14	ASBESTOS CEMENT PIPE	SANITARY SEWER	Active	1/1/1965	BASIN 9
2790	41-26_41-27	41-26	41-27	110	6	VITRIFIED CLAY PIPE	SANITARY SEWER	Active	1/1/1975	BASIN 9
2791	41-27_41-17	41-27	41-17	323	6	VITRIFIED CLAY PIPE	SANITARY SEWER	Active		BASIN 9
2792	41-28_40-45	41-28	40-45	200	8	VITRIFIED CLAY PIPE	SANITARY SEWER	Active	1/1/1978	BASIN 9
2793	41-29_41-28	41-29	41-28	190	8	VITRIFIED CLAY PIPE	SANITARY SEWER	Active	1/1/1978	BASIN 9
2794	4-12R_4-57	4-12R	4-57	246	6	VITRIFIED CLAY PIPE	SANITARY SEWER	Active	1/1/1944	BASIN 1
2795	41-3_41-4	41-3	41-4	350	8	VITRIFIED CLAY PIPE	SANITARY SEWER	Active	1/1/1960	BASIN 9
2796	4-13R_4-14	4-13R	4-14	114	8	VITRIFIED CLAY PIPE	SANITARY SEWER	Active	1/1/1952	BASIN 2
2797	41-4_41-5	41-4	41-5	350	8	VITRIFIED CLAY PIPE	SANITARY SEWER	Active	1/1/1960	BASIN 9
2798	4-14_4-16	4-14	4-16	202	8	VITRIFIED CLAY PIPE	SANITARY SEWER	Active	1/1/1952	BASIN 2
2799	4-15_4-14	4-15	4-14	114	8	VITRIFIED CLAY PIPE	SANITARY SEWER	Active	1/1/1959	BASIN 2
2800	41-5_41-9	41-5	41-9	350	8	VITRIFIED CLAY PIPE	SANITARY SEWER	Active	1/1/1960	BASIN 9
2801	4-16_3-34	4-16	3-34	525	6	VITRIFIED CLAY PIPE	SANITARY SEWER	Active	1/1/1944	BASIN 2
2802	41-6_41-7	41-6	41-7	293	8	VITRIFIED CLAY PIPE	SANITARY SEWER	Active	1/1/1960	BASIN 9
2803	4-17_3-35	4-17	3-35	250	6	VITRIFIED CLAY PIPE	SANITARY SEWER	Active	1/1/1953	BASIN 2
2804	41-7_41-8	41-7	41-8	215	8	VITRIFIED CLAY PIPE	SANITARY SEWER	Active	1/1/1960	BASIN 9
2805	41-8_42-13	41-8	42-13	475	8	VITRIFIED CLAY PIPE	SANITARY SEWER	Active	1/1/1960	BASIN 9
2806	4-18R_4-17	4-18R	4-17	70	6	VITRIFIED CLAY PIPE	SANITARY SEWER	Active	1/1/1944	BASIN 2
2807	41-9_41-10	41-9	41-10	353	8	VITRIFIED CLAY PIPE	SANITARY SEWER	Active	1/1/1960	BASIN 9
2808	4-19R_4-17	4-19R	4-17	324	6	VITRIFIED CLAY PIPE	SANITARY SEWER	Active	1/1/1953	BASIN 2
2809	4-2_4-1	4-2	4-1	380	6	VITRIFIED CLAY PIPE	SANITARY SEWER	Active	1/1/1951	BASIN 1
2810	4-20R_4-55	4-20R	4-55	63	6	VITRIFIED CLAY PIPE	SANITARY SEWER	Active	1/1/1965	BASIN 2
2811	4-21_11-118	4-21	11-118	338	8	VITRIFIED CLAY PIPE	SANITARY SEWER	Active	11/10/2008	BASIN 2
2812	42-1_42-75	42-1	42-75	220	12	ASBESTOS CEMENT PIPE	SANITARY SEWER	Active	1/1/1960	BASIN 9
2813	42-10R_42-9	42-10R	42-9	549	8	VITRIFIED CLAY PIPE	SANITARY SEWER	Active	1/1/1966	BASIN 9

2814	42-11_42-8	42-11	42-8	133	8	VITRIFIED CLAY PIPE	SANITARY SEWER	Active	1/1/1960	BASIN 9
2815	42-12_42-11	42-12	42-11	200	8	VITRIFIED CLAY PIPE	SANITARY SEWER	Active	1/1/1960	BASIN 9
2816	42-13_42-12	42-13	42-12	307	8	VITRIFIED CLAY PIPE	SANITARY SEWER	Active	1/1/1960	BASIN 9
2817	42-14_42-13	42-14	42-13	116	8	VITRIFIED CLAY PIPE	SANITARY SEWER	Active	1/1/1960	BASIN 9
2818	42-15_42-14	42-15	42-14	114	8	VITRIFIED CLAY PIPE	SANITARY SEWER	Active		BASIN 9
2819	42-16_42-48	42-16	42-48	36	8	VITRIFIED CLAY PIPE	SANITARY SEWER	Active		BASIN 9
2820	42-17_42-16	42-17	42-16	87	8	VITRIFIED CLAY PIPE	SANITARY SEWER	Active		BASIN 9
2821	42-18_42-19	42-18	42-19	90	14	ASBESTOS CEMENT PIPE	SANITARY SEWER	Active	1/1/1965	BASIN 9
2822	42-19_42-20	42-19	42-20	191	14	ASBESTOS CEMENT PIPE	SANITARY SEWER	Active	1/1/1965	BASIN 9
2823	4-21R_4-55	4-21R	4-55	272	6	VITRIFIED CLAY PIPE	SANITARY SEWER	Active	1/1/1965	BASIN 2
2824	42-2_42-1	42-2	42-1	222	12	ASBESTOS CEMENT PIPE	SANITARY SEWER	Active	1/1/1960	BASIN 9
2825	4-22_4-21	4-22	4-21	98	8	VITRIFIED CLAY PIPE	SANITARY SEWER	Active	11/10/2008	BASIN 2
2826	42-20_42-21	42-20	42-21	317	14	ASBESTOS CEMENT PIPE	SANITARY SEWER	Active	1/1/1965	BASIN 9
2827	42-21_42-22	42-21	42-22	90	14	ASBESTOS CEMENT PIPE	SANITARY SEWER	Active	1/1/1965	BASIN 9
2828	42-22_42-23	42-22	42-23	182	14	ASBESTOS CEMENT PIPE	SANITARY SEWER	Active	1/1/1965	BASIN 9
2829	42-23_42-24	42-23	42-24	138	18	VITRIFIED CLAY PIPE	SANITARY SEWER	Active	1/1/1965	BASIN 9
2830	42-24_42-25	42-24	42-25	280	14	ASBESTOS CEMENT PIPE	SANITARY SEWER	Active	1/1/1965	BASIN 9
2831	42-25_42-26	42-25	42-26	262	14	ASBESTOS CEMENT PIPE	SANITARY SEWER	Active	1/1/1965	BASIN 9
2832	42-26_42-28	42-26	42-28	206	14	ASBESTOS CEMENT PIPE	SANITARY SEWER	Active	1/1/1965	BASIN 9
2833	42-28_42-92	42-28	42-92	120	14	ASBESTOS CEMENT PIPE	SANITARY SEWER	Active		BASIN 9
2834	42-29_42-54	42-29	42-54	109	15	VITRIFIED CLAY PIPE	SANITARY SEWER	Active	1/1/1980	BASIN 9
2835	42-3_42-2	42-3	42-2	190	12	ASBESTOS CEMENT PIPE	SANITARY SEWER	Active	1/1/1960	BASIN 9
2836	4-23_4-24	4-23	4-24	91	8	VITRIFIED CLAY PIPE	SANITARY SEWER	Active	4/1/2003	BASIN 2
2837	42-30_42-31	42-30	42-31	67	14	ASBESTOS CEMENT PIPE	SANITARY SEWER	Active	1/1/1965	BASIN 9
2838	42-31_42-32	42-31	42-32	222	14	ASBESTOS CEMENT PIPE	SANITARY SEWER	Active	1/1/1965	BASIN 9
2839	42-32_42-34	42-32	42-34	123	14	ASBESTOS CEMENT PIPE	SANITARY SEWER	Active	1/1/1965	BASIN 9
2840	42-34_42-35	42-34	42-35	389	14	ASBESTOS CEMENT PIPE	SANITARY SEWER	Active	1/1/1965	BASIN 9
2841	42-35_42-6	42-35	42-6	80	14	ASBESTOS CEMENT PIPE	SANITARY SEWER	Active	1/1/1965	BASIN 9
2842	42-36_42-37	42-36	42-37	240	8	VITRIFIED CLAY PIPE	SANITARY SEWER	Active	1/1/1964	BASIN 9
2843	42-37_42-38	42-37	42-38	215	8	VITRIFIED CLAY PIPE	SANITARY SEWER	Active	1/1/1964	BASIN 9
2844	42-38_42-40	42-38	42-40	218	8	VITRIFIED CLAY PIPE	SANITARY SEWER	Active	1/1/1964	BASIN 9
2845	42-39_42-38	42-39	42-38	290	8	VITRIFIED CLAY PIPE	SANITARY SEWER	Active	1/1/1964	BASIN 9
2846	4-24_4-21	4-24	4-21	211	8	VITRIFIED CLAY PIPE	SANITARY SEWER	Active	4/1/2003	BASIN 2
2847	42-40_42-41	42-40	42-41	240	8	VITRIFIED CLAY PIPE	SANITARY SEWER	Active	1/1/1964	BASIN 9
2849	42-41_36-66	42-41	36-66	393	8	VITRIFIED CLAY PIPE	SANITARY SEWER	Active	1/1/1964	BASIN 9
2850	42-42_42-41	42-42	42-41	80	8	VITRIFIED CLAY PIPE	SANITARY SEWER	Active	1/1/1964	BASIN 9
2851	42-43_36-77	42-43	36-77	334	8	VITRIFIED CLAY PIPE	SANITARY SEWER	Active	1/1/1962	BASIN 9
2852	42-44_42-43	42-44	42-43	364	8	VITRIFIED CLAY PIPE	SANITARY SEWER	Active	1/1/1962	BASIN 9
2853	42-45_42-44	42-45	42-44	237	8	VITRIFIED CLAY PIPE	SANITARY SEWER	Active	1/1/1962	BASIN 9
2854	42-46_42-15	42-46	42-15	75	8	VITRIFIED CLAY PIPE	SANITARY SEWER	Active		BASIN 9
2855	42-47_42-46	42-47	42-46	135	8	VITRIFIED CLAY PIPE	SANITARY SEWER	Active		BASIN 9
2856	42-48_42-47	42-48	42-47	65	8	VITRIFIED CLAY PIPE	SANITARY SEWER	Active		BASIN 9
2857	42-49_42-50	42-49	42-50	125	8	VITRIFIED CLAY PIPE	SANITARY SEWER	Active	1/1/1980	BASIN 9
2858	4-25_4-24	4-25	4-24	81	8	VITRIFIED CLAY PIPE	SANITARY SEWER	Active	4/1/2003	BASIN 2
2860	42-50_42-52	42-50	42-52	239	8	VITRIFIED CLAY PIPE	SANITARY SEWER	Active	1/1/1980	BASIN 9
2861	42-51_42-50	42-51	42-50	129	8	VITRIFIED CLAY PIPE	SANITARY SEWER	Active	1/1/1980	BASIN 9
2862	42-52_42-54	42-52	42-54	182	8	VITRIFIED CLAY PIPE	SANITARY SEWER	Active	1/1/1980	BASIN 9
2863	42-53_42-52	42-53	42-52	115	8	VITRIFIED CLAY PIPE	SANITARY SEWER	Active	1/1/1980	BASIN 9
2864	42-54_42-30	42-54	42-30	165	15	VITRIFIED CLAY PIPE	SANITARY SEWER	Active	1/1/1980	BASIN 9
2865	42-55_42-54	42-55	42-54	85	8	VITRIFIED CLAY PIPE	SANITARY SEWER	Active	1/1/1980	BASIN 9
2866	42-56_42-67	42-56	42-67	104	8	VITRIFIED CLAY PIPE	SANITARY SEWER	Active	1/1/1990	BASIN 9
2867	42-57_42-56	42-57	42-56	295	8	VITRIFIED CLAY PIPE	SANITARY SEWER	Active	1/1/1990	BASIN 9
2868	42-58_42-57	42-58	42-57	292	8	VITRIFIED CLAY PIPE	SANITARY SEWER	Active	1/1/1990	BASIN 9
2869	42-59_42-58	42-59	42-58	175	8	VITRIFIED CLAY PIPE	SANITARY SEWER	Active	1/1/1990	BASIN 9
2870	4-26_3-88	4-26	3-88	146	8	VITRIFIED CLAY PIPE	SANITARY SEWER	Active	1/1/1956	BASIN 2
2871	42-6_42-67	42-6	42-67	170	12	ASBESTOS CEMENT PIPE	SANITARY SEWER	Active	1/1/1970	BASIN 9
2872	42-60_42-59	42-60	42-59	88	8	VITRIFIED CLAY PIPE	SANITARY SEWER	Active	1/1/1990	BASIN 9
2873	42-61_42-60	42-61	42-60	280	8	VITRIFIED CLAY PIPE	SANITARY SEWER	Active	1/1/1990	BASIN 9
2874	42-62_42-61	42-62	42-61	282	8	VITRIFIED CLAY PIPE	SANITARY SEWER	Active	1/1/1990	BASIN 9
2875	42-63_42-62	42-63	42-62	92	8	VITRIFIED CLAY PIPE	SANITARY SEWER	Active		BASIN 9
2876	42-64_42-62	42-64	42-62	300	8	VITRIFIED CLAY PIPE	SANITARY SEWER	Active	1/1/1990	BASIN 9
2877	42-65_42-64	42-65	42-64	150	8	VITRIFIED CLAY PIPE	SANITARY SEWER	Active	1/1/1990	BASIN 9
2878	42-66_42-65	42-66	42-65	148	8	VITRIFIED CLAY PIPE	SANITARY SEWER	Active	1/1/1990	BASIN 9
2879	42-67_42-3	42-67	42-3	50	12	ASBESTOS CEMENT PIPE	SANITARY SEWER	Active	1/1/1990	BASIN 9
2880	42-68_42-36	42-68	42-36	120	8	VITRIFIED CLAY PIPE	SANITARY SEWER	Active	1/1/1989	BASIN 9
2881	42-69_42-72	42-69	42-72	166	8	VITRIFIED CLAY PIPE	SANITARY SEWER	Active	1/1/1981	BASIN 9
2882	42-7_42-6	42-7	42-6	261	8	VITRIFIED CLAY PIPE	SANITARY SEWER	Active	1/1/1960	BASIN 9
2883	42-70_42-69	42-70	42-69	124	8	VITRIFIED CLAY PIPE	SANITARY SEWER	Active	1/1/1980	BASIN 9
2884	42-71_42-72	42-71	42-72	119	8	VITRIFIED CLAY PIPE	SANITARY SEWER	Active	1/1/1980	BASIN 9
2885	42-72_42-26	42-72	42-26	249	8	VITRIFIED CLAY PIPE	SANITARY SEWER	Active		BASIN 9
2886	42-73_42-18	42-73	42-18	373	14	ASBESTOS CEMENT PIPE	SANITARY SEWER	Active	1/1/1981	BASIN 9
2887	42-74_43-34	42-74	43-34	120	8	VITRIFIED CLAY PIPE	SANITARY SEWER	Active	1/1/1969	BASIN 9
2888	42-75_36-61	42-75	36-61	144	12	ASBESTOS CEMENT PIPE	SANITARY SEWER	Active	1/1/1960	BASIN 9

2889	42-76_42-69	42-76	42-69	265	8	VITRIFIED CLAY PIPE	SANITARY SEWER	Active	1/1/1981	BASIN 9
2890	42-77_43-60	42-77	43-60	184	8	VITRIFIED CLAY PIPE	SANITARY SEWER	Active	5/1/2000	BASIN 9
2891	42-78_42-77	42-78	42-77	280	8	VITRIFIED CLAY PIPE	SANITARY SEWER	Active	5/1/2000	BASIN 9
2892	42-79_42-78	42-79	42-78	124	8	VITRIFIED CLAY PIPE	SANITARY SEWER	Active	5/1/2000	BASIN 9
2893	4-27R_4-26	4-27R	4-26	150	8	VITRIFIED CLAY PIPE	SANITARY SEWER	Active	1/1/1956	BASIN 2
2894	42-8_42-7	42-8	42-7	261	8	VITRIFIED CLAY PIPE	SANITARY SEWER	Active	1/1/1960	BASIN 9
2895	42-80_42-79	42-80	42-79	205	8	VITRIFIED CLAY PIPE	SANITARY SEWER	Active	5/1/2000	BASIN 9
2896	42-81_42-80	42-81	42-80	293	8	VITRIFIED CLAY PIPE	SANITARY SEWER	Active	5/1/2000	BASIN 9
2897	42-82_42-81	42-82	42-81	217	8	VITRIFIED CLAY PIPE	SANITARY SEWER	Active	5/1/2000	BASIN 9
2898	42-84_42-85	42-84	42-85	269	8	VITRIFIED CLAY PIPE	SANITARY SEWER	Active		BASIN 9
2899	42-85_42-86	42-85	42-86	169	8	VITRIFIED CLAY PIPE	SANITARY SEWER	Active		BASIN 9
2900	42-86_42-87	42-86	42-87	101	8	VITRIFIED CLAY PIPE	SANITARY SEWER	Active		BASIN 9
2901	42-87_42-92	42-87	42-92	97	8	VITRIFIED CLAY PIPE	SANITARY SEWER	Active		BASIN 9
2902	42-88_42-89	42-88	42-89	190	8	VITRIFIED CLAY PIPE	SANITARY SEWER	Active		BASIN 9
2903	42-89_42-90	42-89	42-90	176	8	VITRIFIED CLAY PIPE	SANITARY SEWER	Active		BASIN 9
2904	42-9_42-8	42-9	42-8	47	8	VITRIFIED CLAY PIPE	SANITARY SEWER	Active	1/1/1964	BASIN 9
2905	42-90_42-87	42-90	42-87	44	8	VITRIFIED CLAY PIPE	SANITARY SEWER	Active		BASIN 9
2906	42-91_43-47	42-91	43-47	500	8	DUCTILE IRON PIPE	FORCE MAIN	Active	1/1/1988	BASIN 9
2907	42-92_42-29	42-92	42-29	155	14	ASBESTOS CEMENT PIPE	SANITARY SEWER	Active		BASIN 9
2908	42-93_42-59	42-93	42-59	117	8	VITRIFIED CLAY PIPE	SANITARY SEWER	Active		BASIN 9
2909	43-1_42-43	43-1	42-43	323	8	VITRIFIED CLAY PIPE	SANITARY SEWER	Active	1/1/1968	BASIN 9
2910	43-11_43-25	43-11	43-25	317	8	VITRIFIED CLAY PIPE	SANITARY SEWER	Active	1/1/1967	BASIN 9
2911	43-12_43-11	43-12	43-11	206	8	VITRIFIED CLAY PIPE	SANITARY SEWER	Active	1/1/1967	BASIN 9
2912	43-13_43-12	43-13	43-12	115	8	VITRIFIED CLAY PIPE	SANITARY SEWER	Active	1/1/1967	BASIN 9
2913	43-14R_43-13	43-14R	43-13	204	8	VITRIFIED CLAY PIPE	SANITARY SEWER	Active	1/1/1967	BASIN 9
2914	43-15_43-12	43-15	43-12	293	8	VITRIFIED CLAY PIPE	SANITARY SEWER	Active	1/1/1967	BASIN 9
2915	43-16_43-15	43-16	43-15	115	8	VITRIFIED CLAY PIPE	SANITARY SEWER	Active	1/1/1967	BASIN 9
2916	43-17R_43-16	43-17R	43-16	203	8	VITRIFIED CLAY PIPE	SANITARY SEWER	Active	1/1/1967	BASIN 9
2917	43-18_43-15	43-18	43-15	184	8	VITRIFIED CLAY PIPE	SANITARY SEWER	Active	1/1/1968	BASIN 9
2918	4-31R_11-116	4-31R	11-116	251	6	VITRIFIED CLAY PIPE	SANITARY SEWER	Active	1/1/1962	BASIN 2
2919	43-2_42-44	43-2	42-44	211	8	VITRIFIED CLAY PIPE	SANITARY SEWER	Active	1/1/1962	BASIN 9
2920	43-24R_37-77	43-24R	37-77	439	8	VITRIFIED CLAY PIPE	SANITARY SEWER	Active	1/1/1969	BASIN 9
2921	43-25_43-26	43-25	43-26	433	8	VITRIFIED CLAY PIPE	SANITARY SEWER	Active	1/1/1966	BASIN 9
2922	43-25_43-42	43-25	43-42	260	8	VITRIFIED CLAY PIPE	SANITARY SEWER	Active	1/1/1988	BASIN 9
2923	43-26_43-28	43-26	43-28	243	8	VITRIFIED CLAY PIPE	SANITARY SEWER	Active	1/1/1962	BASIN 9
2924	43-28_43-2	43-28	43-2	159	8	VITRIFIED CLAY PIPE	SANITARY SEWER	Active	1/1/1962	BASIN 9
2925	4-32R_4-33	4-32R	4-33	275	8	VITRIFIED CLAY PIPE	SANITARY SEWER	Active	1/1/1960	BASIN 1
2926	4-33_4-34	4-33	4-34	110	8	VITRIFIED CLAY PIPE	SANITARY SEWER	Active	1/1/1960	BASIN 1
2927	43-30R_43-18	43-30R	43-18	120	8	VITRIFIED CLAY PIPE	SANITARY SEWER	Active	1/1/1968	BASIN 9
2928	43-31_37-96	43-31	37-96	195	8	VITRIFIED CLAY PIPE	SANITARY SEWER	Active	1/1/1989	BASIN 9
2929	43-32_43-31	43-32	43-31	246	8	VITRIFIED CLAY PIPE	SANITARY SEWER	Active	1/1/1989	BASIN 9
2930	43-33_43-32	43-33	43-32	341	8	VITRIFIED CLAY PIPE	SANITARY SEWER	Active	1/1/1989	BASIN 9
2931	43-34_43-5	43-34	43-5	260	8		SANITARY SEWER	Active		BASIN 9
2932	43-35_43-34	43-35	43-34	320	8	VITRIFIED CLAY PIPE	SANITARY SEWER	Active	1/1/1988	BASIN 9
2933	43-36_43-37	43-36	43-37	167	8	VITRIFIED CLAY PIPE	SANITARY SEWER	Active		BASIN 9
2934	43-37_43-38	43-37	43-38	122	8	VITRIFIED CLAY PIPE	SANITARY SEWER	Active		BASIN 9
2935	43-38_43-39	43-38	43-39	159	8	VITRIFIED CLAY PIPE	SANITARY SEWER	Active		BASIN 9
2936	43-39_43-26	43-39	43-26	186	8	VITRIFIED CLAY PIPE	SANITARY SEWER	Active	1/1/1969	BASIN 9
2937	43-4_42-74	43-4	42-74	296	6	VITRIFIED CLAY PIPE	SANITARY SEWER	Active	1/1/1969	BASIN 9
2938	4-34_4-35	4-34	4-35	210	8	VITRIFIED CLAY PIPE	SANITARY SEWER	Active	1/1/1960	BASIN 1
2939	43-40_43-41	43-40	43-41	182	15	VITRIFIED CLAY PIPE	SANITARY SEWER	Active	1/1/1989	BASIN 9
2940	43-41_43-56	43-41	43-56	308	15	VITRIFIED CLAY PIPE	SANITARY SEWER	Active	1/1/1989	BASIN 9
2941	43-42_43-55	43-42	43-55	263	8	VITRIFIED CLAY PIPE	SANITARY SEWER	Active	1/1/1987	BASIN 9
2942	43-43_43-7	43-43	43-7	23	12	VITRIFIED CLAY PIPE	SANITARY SEWER	Active	1/1/1969	BASIN 9
2943	43-44_43-43	43-44	43-43	302	8	VITRIFIED CLAY PIPE	SANITARY SEWER	Active	1/1/1987	BASIN 9
2944	43-45_43-44	43-45	43-44	300	8	VITRIFIED CLAY PIPE	SANITARY SEWER	Active	1/1/1988	BASIN 9
2945	43-46_43-45	43-46	43-45	220	8	VITRIFIED CLAY PIPE	SANITARY SEWER	Active	1/1/1988	BASIN 9
2946	43-47_43-46	43-47	43-46	580	8	DUCTILE IRON PIPE	FORCE MAIN	Active	1/1/1988	BASIN 9
2947	43-49_43-7	43-49	43-7	273	8	VITRIFIED CLAY PIPE	SANITARY SEWER	Active	1/1/1995	BASIN 9
2948	43-5_43-6	43-5	43-6	384	8	VITRIFIED CLAY PIPE	SANITARY SEWER	Active	1/1/1969	BASIN 9
2949	4-35_4-36	4-35	4-36	66	8	VITRIFIED CLAY PIPE	SANITARY SEWER	Active	1/1/1960	BASIN 1
2950	43-50_43-49	43-50	43-49	260	8	VITRIFIED CLAY PIPE	SANITARY SEWER	Active	1/1/1995	BASIN 9
2951	43-51_43-50	43-51	43-50	156	8	VITRIFIED CLAY PIPE	SANITARY SEWER	Active	1/1/1995	BASIN 9
2952	43-52_43-8	43-52	43-8	290	8	VITRIFIED CLAY PIPE	SANITARY SEWER	Active	1/1/1989	BASIN 9
2953	43-53_43-52	43-53	43-52	137	8		SANITARY SEWER	Active		BASIN 9
2954	43-54_43-53	43-54	43-53	29	8		SANITARY SEWER	Active		BASIN 9
2955	43-55_37-74	43-55	37-74	307	8	VITRIFIED CLAY PIPE	SANITARY SEWER	Active	1/1/1969	BASIN 9
2956	43-56_43-57	43-56	43-57	43	15		SANITARY SEWER	Active		BASIN 9
2957	43-57_37-80	43-57	37-80	141	15		SANITARY SEWER	Active		BASIN 9
2958	43-59_43-51	43-59	43-51	294	8	VITRIFIED CLAY PIPE	SANITARY SEWER	Active	5/1/2000	BASIN 9
2959	43-6_43-11	43-6	43-11	79	8	VITRIFIED CLAY PIPE	SANITARY SEWER	Active	1/1/1969	BASIN 9
2960	4-36_4-37	4-36	4-37	98	8	VITRIFIED CLAY PIPE	SANITARY SEWER	Active	1/1/1960	BASIN 1
2961	43-60_43-59	43-60	43-59	233	8	VITRIFIED CLAY PIPE	SANITARY SEWER	Active	5/1/2000	BASIN 9

2962	43-62_43-63	43-62	43-63	88	8	VITRIFIED CLAY PIPE	SANITARY SEWER	Active	7/18/2017	
2963	43-63_43-4	43-63	43-4	61	8	VITRIFIED CLAY PIPE	SANITARY SEWER	Active	7/28/2017	BASIN 9
2964	43-7_43-6	43-7	43-6	201	8	VITRIFIED CLAY PIPE	SANITARY SEWER	Active	1/1/1969	BASIN 9
2965	4-37_4-38	4-37	4-38	440	8	VITRIFIED CLAY PIPE	SANITARY SEWER	Active	1/1/1960	BASIN 1
2966	43-8_43-43	43-8	43-43	23	8	VITRIFIED CLAY PIPE	SANITARY SEWER	Active	1/1/1969	BASIN 9
2967	4-38_5-77	4-38	5-77	279	8	VITRIFIED CLAY PIPE	SANITARY SEWER	Active	1/1/1955	BASIN 1
2968	4-3R_4-2	4-3R	4-2	266	6	VITRIFIED CLAY PIPE	SANITARY SEWER	Active	1/1/1951	BASIN 1
2969	4-40_5-77	4-40	5-77	309	8	VITRIFIED CLAY PIPE	SANITARY SEWER	Active	1/1/1974	BASIN 1
2970	4-41_4-40	4-41	4-40	106	8	VITRIFIED CLAY PIPE	SANITARY SEWER	Active	1/1/1976	BASIN 1
2971	44-1_44-2	44-1	44-2	144	8	VITRIFIED CLAY PIPE	SANITARY SEWER	Active	1/1/1964	BASIN 9
2972	44-10_40-58	44-10	40-58	247	8	VITRIFIED CLAY PIPE	SANITARY SEWER	Active	1/1/1964	BASIN 9
2973	44-11_40-59	44-11	40-59	136	8	VITRIFIED CLAY PIPE	SANITARY SEWER	Active	1/1/1964	BASIN 9
2974	44-13_45-15	44-13	45-15	221	8	VITRIFIED CLAY PIPE	SANITARY SEWER	Active	1/1/1979	BASIN 9
2975	44-14_44-13	44-14	44-13	220	8	VITRIFIED CLAY PIPE	SANITARY SEWER	Active	1/1/1979	BASIN 9
2976	44-15_44-14	44-15	44-14	200	8	VITRIFIED CLAY PIPE	SANITARY SEWER	Active	1/1/1979	BASIN 9
2977	44-16_44-15	44-16	44-15	59	8	DUCTILE IRON PIPE	SANITARY SEWER	Active	1/1/1985	BASIN 9
2978	44-17_44-15	44-17	44-15	120	8	VITRIFIED CLAY PIPE	SANITARY SEWER	Active	1/1/1979	BASIN 9
2979	44-18_44-17	44-18	44-17	200	8	VITRIFIED CLAY PIPE	SANITARY SEWER	Active	1/1/1979	BASIN 9
2980	44-19_44-18	44-19	44-18	204	8	VITRIFIED CLAY PIPE	SANITARY SEWER	Active	1/1/1979	BASIN 9
2981	4-42_4-38	4-42	4-38	110	8	VITRIFIED CLAY PIPE	SANITARY SEWER	Active	1/1/1955	BASIN 1
2982	44-2_44-11	44-2	44-11	246	8	VITRIFIED CLAY PIPE	SANITARY SEWER	Active	1/1/1964	BASIN 9
2983	44-20_44-19	44-20	44-19	284	8	VITRIFIED CLAY PIPE	SANITARY SEWER	Active	1/1/1979	BASIN 9
2984	44-21_44-20	44-21	44-20	143	8	VITRIFIED CLAY PIPE	SANITARY SEWER	Active	1/1/1979	BASIN 9
2985	44-22_44-21	44-22	44-21	67	8	VITRIFIED CLAY PIPE	SANITARY SEWER	Active	1/1/1979	BASIN 9
2986	44-23_44-22	44-23	44-22	300	8	VITRIFIED CLAY PIPE	SANITARY SEWER	Active	1/1/1979	BASIN 9
2987	44-24_44-23	44-24	44-23	269	8	VITRIFIED CLAY PIPE	SANITARY SEWER	Active	1/1/1979	BASIN 9
2988	44-25_44-26	44-25	44-26	142	8	VITRIFIED CLAY PIPE	SANITARY SEWER	Active	1/1/1979	BASIN 9
2989	44-26_44-24	44-26	44-24	300	8	VITRIFIED CLAY PIPE	SANITARY SEWER	Active	1/1/1979	BASIN 9
2990	44-27_44-26	44-27	44-26	260	8	VITRIFIED CLAY PIPE	SANITARY SEWER	Active	1/1/1985	BASIN 9
2991	44-28_44-27	44-28	44-27	197	8	VITRIFIED CLAY PIPE	SANITARY SEWER	Active	1/1/1985	BASIN 9
2992	44-29_44-28	44-29	44-28	192	8	VITRIFIED CLAY PIPE	SANITARY SEWER	Active	1/1/1985	BASIN 9
2993	4-43_4-42	4-43	4-42	559	6	VITRIFIED CLAY PIPE	SANITARY SEWER	Active	1/1/1976	BASIN 1
2994	44-30_44-29	44-30	44-29	260	8	VITRIFIED CLAY PIPE	SANITARY SEWER	Active	1/1/1985	BASIN 9
2995	44-31_44-30	44-31	44-30	209	8	VITRIFIED CLAY PIPE	SANITARY SEWER	Active	1/1/1985	BASIN 9
2996	44-33_44-34	44-33	44-34	205	8	VITRIFIED CLAY PIPE	SANITARY SEWER	Active	1/1/1985	BASIN 9
2997	44-34_44-30	44-34	44-30	299	8	VITRIFIED CLAY PIPE	SANITARY SEWER	Active	1/1/1985	BASIN 9
2998	44-34_44-35	44-34	44-35	179	8	VITRIFIED CLAY PIPE	SANITARY SEWER	Active	1/1/1985	BASIN 9
2999	44-35_44-36	44-35	44-36	246	8	VITRIFIED CLAY PIPE	SANITARY SEWER	Active	1/1/1985	BASIN 9
3000	44-36_44-37	44-36	44-37	295	8	VITRIFIED CLAY PIPE	SANITARY SEWER	Active	1/1/1985	BASIN 9
3001	44-37_44-26	44-37	44-26	273	8	VITRIFIED CLAY PIPE	SANITARY SEWER	Active	1/1/1985	BASIN 9
3002	44-38_44-37	44-38	44-37	224	8	VITRIFIED CLAY PIPE	SANITARY SEWER	Active	1/1/1985	BASIN 9
3003	44-39_44-38	44-39	44-38	188	8	VITRIFIED CLAY PIPE	SANITARY SEWER	Active	1/1/1985	BASIN 9
3004	44-3R_44-11	44-3R	44-11	147	8	VITRIFIED CLAY PIPE	SANITARY SEWER	Active	1/1/1964	BASIN 9
3005	4-44_4-43	4-44	4-43	41	6	VITRIFIED CLAY PIPE	SANITARY SEWER	Active	1/1/1944	BASIN 1
3006	44-40_44-39	44-40	44-39	236	8	VITRIFIED CLAY PIPE	SANITARY SEWER	Active	1/1/1985	BASIN 9
3007	44-41_44-39	44-41	44-39	234	8	VITRIFIED CLAY PIPE	SANITARY SEWER	Active	1/1/1985	BASIN 9
3008	44-42_44-34	44-42	44-34	144	8	VITRIFIED CLAY PIPE	SANITARY SEWER	Active	1/1/1985	BASIN 9
3009	44-43_44-41	44-43	44-41	150	8	VITRIFIED CLAY PIPE	SANITARY SEWER	Active	1/1/1985	BASIN 9
3010	44-43_44-42	44-43	44-42	179	8	VITRIFIED CLAY PIPE	SANITARY SEWER	Active	1/1/1985	BASIN 9
3011	44-43_44-45	44-43	44-45	295	8	VITRIFIED CLAY PIPE	SANITARY SEWER	Active	1/1/1985	BASIN 9
3012	44-45_44-46	44-45	44-46	173	8	VITRIFIED CLAY PIPE	SANITARY SEWER	Active	1/1/1985	BASIN 9
3013	44-46_44-47	44-46	44-47	310	8	VITRIFIED CLAY PIPE	SANITARY SEWER	Active	1/1/1985	BASIN 9
3014	44-47_44-48	44-47	44-48	216	8	VITRIFIED CLAY PIPE	SANITARY SEWER	Active	1/1/1985	BASIN 9
3015	44-48_44-67	44-48	44-67	244	8	VITRIFIED CLAY PIPE	SANITARY SEWER	Active	1/1/1987	BASIN 9
3016	44-49_44-50	44-49	44-50	278	8	VITRIFIED CLAY PIPE	SANITARY SEWER	Active	1/1/1985	BASIN 9
3017	44-4R_44-5	44-4R	44-5	247	8	VITRIFIED CLAY PIPE	SANITARY SEWER	Active	1/1/1964	BASIN 9
3018	4-45_4-42	4-45	4-42	183	6	VITRIFIED CLAY PIPE	SANITARY SEWER	Active	1/1/1964	BASIN 1
3019	44-5_44-6	44-5	44-6	300	8	VITRIFIED CLAY PIPE	SANITARY SEWER	Active	1/1/1964	BASIN 9
3020	44-50_44-51	44-50	44-51	57	8	VITRIFIED CLAY PIPE	SANITARY SEWER	Active	1/1/1985	BASIN 9
3021	44-51_44-53	44-51	44-53	191	8	DUCTILE IRON PIPE	SANITARY SEWER	Active	1/1/1985	BASIN 9
3022	44-52_44-51	44-52	44-51	55	8	VITRIFIED CLAY PIPE	SANITARY SEWER	Active	1/1/1985	BASIN 9
3023	44-53_44-16	44-53	44-16	506	8	DUCTILE IRON PIPE	SANITARY SEWER	Active	1/1/1985	BASIN 9
3024	44-54_44-53	44-54	44-53	106	8	VITRIFIED CLAY PIPE	SANITARY SEWER	Active	1/1/1986	BASIN 9
3025	44-55_44-54	44-55	44-54	153	8	VITRIFIED CLAY PIPE	SANITARY SEWER	Active	1/1/1986	BASIN 9
3026	44-56_44-55	44-56	44-55	129	8	VITRIFIED CLAY PIPE	SANITARY SEWER	Active	1/1/1986	BASIN 9
3027	44-57_44-56	44-57	44-56	195	8	VITRIFIED CLAY PIPE	SANITARY SEWER	Active	1/1/1986	BASIN 9
3028	44-58_44-57	44-58	44-57	216	8	VITRIFIED CLAY PIPE	SANITARY SEWER	Active	1/1/1986	BASIN 9
3029	44-59_44-58	44-59	44-58	146	8	VITRIFIED CLAY PIPE	SANITARY SEWER	Active	1/1/1986	BASIN 9
3030	44-59_44-61	44-59	44-61	126	8	VITRIFIED CLAY PIPE	SANITARY SEWER	Active	1/1/1986	BASIN 9
3031	4-46_4-45	4-46	4-45	296	8	VITRIFIED CLAY PIPE	SANITARY SEWER	Active	1/1/1964	BASIN 1
3032	44-6_44-7	44-6	44-7	205	8	VITRIFIED CLAY PIPE	SANITARY SEWER	Active	1/1/1964	BASIN 9
3033	44-60_44-59	44-60	44-59	93	8	VITRIFIED CLAY PIPE	SANITARY SEWER	Active	1/1/1986	BASIN 9
3034	44-61_44-62	44-61	44-62	275	8	VITRIFIED CLAY PIPE	SANITARY SEWER	Active	1/1/1986	BASIN 9

3035	44-62_44-65	44-62	44-65	140	8	VITRIFIED CLAY PIPE	SANITARY SEWER	Active	1/1/1986	BASIN 9
3036	44-63_44-62	44-63	44-62	92	8	VITRIFIED CLAY PIPE	SANITARY SEWER	Active	1/1/1986	BASIN 9
3037	44-63_44-64	44-63	44-64	140	8	VITRIFIED CLAY PIPE	SANITARY SEWER	Active	1/1/1986	BASIN 9
3038	44-64_44-65	44-64	44-65	92	8	VITRIFIED CLAY PIPE	SANITARY SEWER	Active	1/1/1986	BASIN 9
3039	44-65_44-66	44-65	44-66	181	8	VITRIFIED CLAY PIPE	SANITARY SEWER	Active	1/1/1986	BASIN 9
3040	44-66_44-55	44-66	44-55	150	8	VITRIFIED CLAY PIPE	SANITARY SEWER	Active	1/1/1986	BASIN 9
3041	44-67_44-49	44-67	44-49	80	8	VITRIFIED CLAY PIPE	SANITARY SEWER	Active	1/1/1987	BASIN 9
3042	44-68_44-69	44-68	44-69	33	8	DUCTILE IRON PIPE	SANITARY SEWER	Active	1/1/1987	BASIN 9
3043	44-69_44-67	44-69	44-67	236	8	VITRIFIED CLAY PIPE	SANITARY SEWER	Active	1/1/1988	BASIN 9
3044	44-7_44-8	44-7	44-8	205	8	VITRIFIED CLAY PIPE	SANITARY SEWER	Active	1/1/1964	BASIN 9
3045	4-47_4-53	4-47	4-53	30	6	VITRIFIED CLAY PIPE	SANITARY SEWER	Active	1/1/1944	BASIN 1
3046	44-70_62-31	44-70	62-31	197	8	VITRIFIED CLAY PIPE	SANITARY SEWER	Active	1/1/1987	BASIN 9
3047	44-8_44-9	44-8	44-9	203	8	VITRIFIED CLAY PIPE	SANITARY SEWER	Active	1/1/1964	BASIN 9
3048	4-48_4-68	4-48	4-68	383	6	VITRIFIED CLAY PIPE	SANITARY SEWER	Active	1/1/1944	BASIN 1
3049	44-9_44-10	44-9	44-10	303	8	VITRIFIED CLAY PIPE	SANITARY SEWER	Active	1/1/1964	BASIN 9
3050	4-49_4-48	4-49	4-48	355	6	VITRIFIED CLAY PIPE	SANITARY SEWER	Active	1/1/1944	BASIN 1
3051	4-4R_4-5	4-4R	4-5	71	8	VITRIFIED CLAY PIPE	SANITARY SEWER	Active	1/1/1962	BASIN 1
3052	4-5_4-7	4-5	4-7	120	8	VITRIFIED CLAY PIPE	SANITARY SEWER	Active	1/1/1962	BASIN 1
3053	45-10_45-9	45-10	45-9	800	8	CAST IRON PIPE	SANITARY SEWER	Active	1/1/1980	BASIN 9
3054	45-11R_45-9	45-11R	45-9	451	8	VITRIFIED CLAY PIPE	SANITARY SEWER	Active	1/1/1975	BASIN 9
3055	45-12_45-6	45-12	45-6	50	10	VITRIFIED CLAY PIPE	SANITARY SEWER	Active	1/1/1979	BASIN 9
3056	45-13_45-12	45-13	45-12	286	10	VITRIFIED CLAY PIPE	SANITARY SEWER	Active	1/1/1979	BASIN 9
3057	45-14_45-27	45-14	45-27	97	10	VITRIFIED CLAY PIPE	SANITARY SEWER	Active	1/1/1979	BASIN 9
3058	45-15_45-14	45-15	45-14	289	8	VITRIFIED CLAY PIPE	SANITARY SEWER	Active	1/1/1979	BASIN 9
3059	45-19_44-69	45-19	44-69	265	8	DUCTILE IRON PIPE	SANITARY SEWER	Active	1/1/1987	BASIN 9
3060	45-2_46-19	45-2	46-19	226	8	VITRIFIED CLAY PIPE	SANITARY SEWER	Active	1/1/1981	BASIN 9
3061	4-52_5-1	4-52	5-1	392	6	VITRIFIED CLAY PIPE	SANITARY SEWER	Active	1/1/1944	BASIN 1
3062	45-20_45-19	45-20	45-19	84	8	DUCTILE IRON PIPE	SANITARY SEWER	Active	1/1/1987	BASIN 9
3063	45-21_45-20	45-21	45-20	105	8	DUCTILE IRON PIPE	SANITARY SEWER	Active	1/1/1990	BASIN 9
3064	45-22_45-21	45-22	45-21	60	8	DUCTILE IRON PIPE	SANITARY SEWER	Active	1/1/1990	BASIN 9
3065	45-23R_45-24	45-23R	45-24	265	4	DUCTILE IRON PIPE	SANITARY SEWER	Active	1/1/1990	BASIN 9
3066	45-24_45-25	45-24	45-25	265	8	VITRIFIED CLAY PIPE	SANITARY SEWER	Active	1/1/1990	BASIN 9
3067	45-25_45-26	45-25	45-26	190	8	DUCTILE IRON PIPE	SANITARY SEWER	Active	1/1/1990	BASIN 9
3068	45-26_46-8	45-26	46-8	576	8	DUCTILE IRON PIPE	SANITARY SEWER	Active	1/1/1990	BASIN 9
3069	45-27_45-13	45-27	45-13	205	10	VITRIFIED CLAY PIPE	SANITARY SEWER	Active	1/1/1995	BASIN 9
3070	45-28_45-27	45-28	45-27	318	8	DUCTILE IRON PIPE	SANITARY SEWER	Active	1/1/1985	BASIN 9
3071	45-29_45-28	45-29	45-28	382	8	DUCTILE IRON PIPE	SANITARY SEWER	Active	1/1/1985	BASIN 9
3072	45-2R_45-3	45-2R	45-3	322	8	VITRIFIED CLAY PIPE	SANITARY SEWER	Active	1/1/1964	BASIN 9
3073	45-3_41-20	45-3	41-20	310	8	VITRIFIED CLAY PIPE	SANITARY SEWER	Active	1/1/1964	BASIN 9
3074	4-53_4-45	4-53	4-45	447	6	VITRIFIED CLAY PIPE	SANITARY SEWER	Active	1/1/1975	BASIN 1
3075	45-30_45-59	45-30	45-59	485	8	DUCTILE IRON PIPE	SANITARY SEWER	Active	1/1/1995	BASIN 9
3076	45-31_45-30	45-31	45-30	181	8	VITRIFIED CLAY PIPE	SANITARY SEWER	Active	1/1/1995	BASIN 9
3077	45-32_45-30	45-32	45-30	317	8	VITRIFIED CLAY PIPE	SANITARY SEWER	Active	1/1/1995	BASIN 9
3078	45-33_45-34	45-33	45-34	296	8	DUCTILE IRON PIPE	SANITARY SEWER	Active	1/1/1985	BASIN 9
3079	45-34_45-32	45-34	45-32	152	8	VITRIFIED CLAY PIPE	SANITARY SEWER	Active	1/1/1995	BASIN 9
3080	45-35_45-34	45-35	45-34	30	8	VITRIFIED CLAY PIPE	SANITARY SEWER	Active	1/1/1985	BASIN 9
3081	45-36_45-35	45-36	45-35	329	8	VITRIFIED CLAY PIPE	SANITARY SEWER	Active	1/1/1995	BASIN 9
3082	45-37_45-36	45-37	45-36	321	8	VITRIFIED CLAY PIPE	SANITARY SEWER	Active	1/1/1995	BASIN 9
3083	45-38_45-37	45-38	45-37	304	8	DUCTILE IRON PIPE	SANITARY SEWER	Active	1/1/1995	BASIN 9
3084	4-54_4-53	4-54	4-53	367	6	VITRIFIED CLAY PIPE	SANITARY SEWER	Active	1/1/1975	BASIN 1
3085	45-4_45-5	45-4	45-5	234	8	ASBESTOS CEMENT PIPE	SANITARY SEWER	Active	1/1/1964	BASIN 9
3086	4-55_4-22	4-55	4-22	217	8	VITRIFIED CLAY PIPE	SANITARY SEWER	Active	3/12/2014	BASIN 2
3087	45-5_45-6	45-5	45-6	45	8	VITRIFIED CLAY PIPE	SANITARY SEWER	Active	1/1/1964	BASIN 9
3088	45-57_45-33	45-57	45-33	190	8	DUCTILE IRON PIPE	SANITARY SEWER	Active		BASIN 9
3089	45-58_45-57	45-58	45-57	127	8	DUCTILE IRON PIPE	SANITARY SEWER	Active	11/15/2005	BASIN 9
3090	45-59_45-60	45-59	45-60	485	8	DUCTILE IRON PIPE	SANITARY SEWER	Active	1/1/1995	BASIN 9
3091	4-56_4-44	4-56	4-44	157	8	VITRIFIED CLAY PIPE	SANITARY SEWER	Active	1/1/1979	BASIN 1
3092	45-6_45-7	45-6	45-7	422	10	ASBESTOS CEMENT PIPE	SANITARY SEWER	Active	1/1/1965	BASIN 9
3093	45-60_45-29	45-60	45-29	485	8	DUCTILE IRON PIPE	SANITARY SEWER	Active	1/1/1995	BASIN 9
3094	4-57_4-11	4-57	4-11	54	6	VITRIFIED CLAY PIPE	SANITARY SEWER	Active	1/1/1992	BASIN 1
3095	45-7_41-16	45-7	41-16	180	10	ASBESTOS CEMENT PIPE	SANITARY SEWER	Active	1/1/1965	BASIN 9
3096	45-8_45-7	45-8	45-7	150	8	VITRIFIED CLAY PIPE	SANITARY SEWER	Active	1/1/1975	BASIN 9
3097	4-58_4-57	4-58	4-57	237	8	VITRIFIED CLAY PIPE	SANITARY SEWER	Active	1/1/1992	BASIN 1
3098	45-9_45-8	45-9	45-8	66	8	VITRIFIED CLAY PIPE	SANITARY SEWER	Active	1/1/1975	BASIN 9
3099	4-59_4-58	4-59	4-58	223	8	VITRIFIED CLAY PIPE	SANITARY SEWER	Active	1/1/1992	BASIN 1
3100	4-60_4-59	4-60	4-59	226	8	VITRIFIED CLAY PIPE	SANITARY SEWER	Active	1/1/1992	BASIN 1
3101	46-1_42-91	46-1	42-91	500	8	DUCTILE IRON PIPE	FORCE MAIN	Active	1/1/1987	BASIN 9
3102	4-61_4-60	4-61	4-60	123	8	VITRIFIED CLAY PIPE	SANITARY SEWER	Active	1/1/1992	BASIN 1
3103	4-61_4-62	4-61	4-62	122	8	VITRIFIED CLAY PIPE	SANITARY SEWER	Active	1/1/1992	BASIN 1
3104	46-10_46-9	46-10	46-9	383	8	VITRIFIED CLAY PIPE	SANITARY SEWER	Active	1/1/1987	BASIN 9
3105	46-11_46-10	46-11	46-10	317	8	VITRIFIED CLAY PIPE	SANITARY SEWER	Active	1/1/1981	BASIN 9
3106	46-15_42-82	46-15	42-82	258	8	VITRIFIED CLAY PIPE	SANITARY SEWER	Active	5/1/2000	BASIN 9
3107	46-16_46-15	46-16	46-15	181	8	VITRIFIED CLAY PIPE	SANITARY SEWER	Active	5/1/2000	BASIN 9

3108	46-17_46-16	46-17	46-16	299	8	VITRIFIED CLAY PIPE	SANITARY SEWER	Active	5/1/2000	BASIN 9
3109	46-18_46-17	46-18	46-17	297	8	VITRIFIED CLAY PIPE	SANITARY SEWER	Active	5/1/2000	BASIN 9
3110	46-19_46-11	46-19	46-11	128	8	VITRIFIED CLAY PIPE	SANITARY SEWER	Active	1/1/1981	BASIN 9
3111	46-2_46-1	46-2	46-1	500	8	DUCTILE IRON PIPE	FORCE MAIN	Active		BASIN 9
3112	4-62_4-64	4-62	4-64	205	8	VITRIFIED CLAY PIPE	SANITARY SEWER	Active	1/1/1992	BASIN 1
3113	46-3_46-2	46-3	46-2	500	8	DUCTILE IRON PIPE	FORCE MAIN	Active	1/1/1987	BASIN 9
3114	4-63_4-62	4-63	4-62	66	8	VITRIFIED CLAY PIPE	SANITARY SEWER	Active	1/1/1992	BASIN 1
3115	46-4_46-3	46-4	46-3	500	8	DUCTILE IRON PIPE	FORCE MAIN	Active		BASIN 9
3116	4-64_4-65	4-64	4-65	194	8	VITRIFIED CLAY PIPE	SANITARY SEWER	Active	1/1/1992	BASIN 1
3117	4-65_4-58	4-65	4-58	310	8	VITRIFIED CLAY PIPE	SANITARY SEWER	Active	1/1/1992	BASIN 1
3118	46-5_46-4	46-5	46-4	505	8	DUCTILE IRON PIPE	FORCE MAIN	Active		BASIN 9
3119	46-6_46-5	46-6	46-5	460	8	DUCTILE IRON PIPE	FORCE MAIN	Active	1/1/1987	BASIN 9
3120	4-66_5-71	4-66	5-71	109	8	VITRIFIED CLAY PIPE	SANITARY SEWER	Active	1/1/1988	BASIN 1
3121	4-67_4-66	4-67	4-66	122	8	VITRIFIED CLAY PIPE	SANITARY SEWER	Active	1/1/1988	BASIN 1
3122	46-7_PS7	46-7	PS07	60	8	DUCTILE IRON PIPE	OVERFLOW	Active		BASIN 9
3123	4-68_4-47	4-68	4-47	216	6	VITRIFIED CLAY PIPE	SANITARY SEWER	Active	1/1/1944	BASIN 1
3124	46-8_PS7	46-8	PS07	60	8	DUCTILE IRON PIPE	SANITARY SEWER	Active	1/1/1989	BASIN 9
3125	4-69_4-68	4-69	4-68	109	8	VITRIFIED CLAY PIPE	SANITARY SEWER	Active	1/1/1990	BASIN 1
3126	46-9_PS7	46-9	PS07	55	8	VITRIFIED CLAY PIPE	SANITARY SEWER	Active	1/1/1987	BASIN 9
3127	4-6R_4-7	4-6R	4-7	125	8	VITRIFIED CLAY PIPE	SANITARY SEWER	Active	1/1/1962	BASIN 1
3128	4-7_4-9	4-7	4-9	180	8	VITRIFIED CLAY PIPE	SANITARY SEWER	Active	1/1/1962	BASIN 1
3129	4-70_4-71	4-70	4-71	133	8	VITRIFIED CLAY PIPE	SANITARY SEWER	Active	1/1/1990	BASIN 1
3130	4-71_4-69	4-71	4-69	225	8	VITRIFIED CLAY PIPE	SANITARY SEWER	Active	1/1/1990	BASIN 1
3131	47-10_47-9	47-10	47-9	265	8	VITRIFIED CLAY PIPE	SANITARY SEWER	Active	1/1/1979	BASIN 9
3132	47-11_47-7	47-11	47-7	202	8	VITRIFIED CLAY PIPE	SANITARY SEWER	Active	1/1/1980	BASIN 9
3133	47-12_47-13	47-12	47-13	120	8	VITRIFIED CLAY PIPE	SANITARY SEWER	Active	1/1/1980	BASIN 9
3134	47-13_47-11	47-13	47-11	245	8	VITRIFIED CLAY PIPE	SANITARY SEWER	Active	1/1/1980	BASIN 9
3135	47-14_47-13	47-14	47-13	300	8	VITRIFIED CLAY PIPE	SANITARY SEWER	Active	1/1/1980	BASIN 9
3136	47-15_47-14	47-15	47-14	307	8	VITRIFIED CLAY PIPE	SANITARY SEWER	Active	1/1/1980	BASIN 9
3137	47-16_47-15	47-16	47-15	140	8	DUCTILE IRON PIPE	SANITARY SEWER	Active	1/1/1983	BASIN 9
3138	47-17_47-16	47-17	47-16	399	8	DUCTILE IRON PIPE	SANITARY SEWER	Active	1/1/1983	BASIN 9
3139	47-18_47-17	47-18	47-17	334	8	DUCTILE IRON PIPE	SANITARY SEWER	Active	1/1/1983	BASIN 9
3140	47-19_47-18	47-19	47-18	96	8	DUCTILE IRON PIPE	SANITARY SEWER	Active	1/1/1983	BASIN 9
3141	4-72_4-71	4-72	4-71	259	8	VITRIFIED CLAY PIPE	SANITARY SEWER	Active	1/1/1990	BASIN 1
3142	47-2_47-3	47-2	47-3	268	8	VITRIFIED CLAY PIPE	SANITARY SEWER	Active	1/1/1979	BASIN 9
3143	47-20_47-19	47-20	47-19	122	8	VITRIFIED CLAY PIPE	SANITARY SEWER	Active	1/1/1983	BASIN 9
3144	47-21_47-19	47-21	47-19	257	8	VITRIFIED CLAY PIPE	SANITARY SEWER	Active	1/1/1983	BASIN 9
3145	47-22_47-21	47-22	47-21	250	8	VITRIFIED CLAY PIPE	SANITARY SEWER	Active	1/1/1983	BASIN 9
3146	47-22_47-23	47-22	47-23	177	8	VITRIFIED CLAY PIPE	SANITARY SEWER	Active	1/1/1983	BASIN 9
3147	47-23_47-24	47-23	47-24	159	8	VITRIFIED CLAY PIPE	SANITARY SEWER	Active	1/1/1983	BASIN 9
3148	47-24_47-28	47-24	47-28	270	8	VITRIFIED CLAY PIPE	SANITARY SEWER	Active	1/1/1983	BASIN 9
3149	47-25_47-24	47-25	47-24	300	8	VITRIFIED CLAY PIPE	SANITARY SEWER	Active	1/1/1983	BASIN 9
3150	47-26_47-27	47-26	47-27	289	8	VITRIFIED CLAY PIPE	SANITARY SEWER	Active	1/1/1980	BASIN 9
3151	47-27_47-28	47-27	47-28	252	8	VITRIFIED CLAY PIPE	SANITARY SEWER	Active	1/1/1980	BASIN 9
3152	47-28_47-15	47-28	47-15	216	8	VITRIFIED CLAY PIPE	SANITARY SEWER	Active	1/1/1980	BASIN 9
3153	47-28_47-29	47-28	47-29	156	8	VITRIFIED CLAY PIPE	SANITARY SEWER	Active	1/1/1980	BASIN 9
3154	47-29_47-30	47-29	47-30	279	8	VITRIFIED CLAY PIPE	SANITARY SEWER	Active	1/1/1980	BASIN 9
3155	4-73_4-72	4-73	4-72	100	8	VITRIFIED CLAY PIPE	SANITARY SEWER	Active	1/1/1990	BASIN 1
3156	47-3_47-4	47-3	47-4	248	8	VITRIFIED CLAY PIPE	SANITARY SEWER	Active	1/1/1979	BASIN 9
3157	47-30_47-31	47-30	47-31	300	8	VITRIFIED CLAY PIPE	SANITARY SEWER	Active	1/1/1980	BASIN 9
3158	47-31_47-32	47-31	47-32	195	8	VITRIFIED CLAY PIPE	SANITARY SEWER	Active	1/1/1980	BASIN 9
3159	47-32_47-6	47-32	47-6	172	8	VITRIFIED CLAY PIPE	SANITARY SEWER	Active	1/1/1979	BASIN 9
3160	47-33_47-2	47-33	47-2	261	8	VITRIFIED CLAY PIPE	SANITARY SEWER	Active	1/1/1979	BASIN 9
3161	47-34_47-33	47-34	47-33	141	8	VITRIFIED CLAY PIPE	SANITARY SEWER	Active	1/1/1979	BASIN 9
3162	47-35_47-33	47-35	47-33	153	8	VITRIFIED CLAY PIPE	SANITARY SEWER	Active	1/1/1980	BASIN 9
3163	47-36_47-35	47-36	47-35	181	8	VITRIFIED CLAY PIPE	SANITARY SEWER	Active	1/1/1980	BASIN 9
3164	47-37_47-36	47-37	47-36	271	8	VITRIFIED CLAY PIPE	SANITARY SEWER	Active	1/1/1980	BASIN 9
3165	47-38_47-37	47-38	47-37	166	8	VITRIFIED CLAY PIPE	SANITARY SEWER	Active	1/1/1980	BASIN 9
3166	47-39_47-37	47-39	47-37	279	8	VITRIFIED CLAY PIPE	SANITARY SEWER	Active	1/1/1980	BASIN 9
3167	4-74_4-72	4-74	4-72	98	8	VITRIFIED CLAY PIPE	SANITARY SEWER	Active	1/1/1990	BASIN 1
3168	47-4_47-5	47-4	47-5	300	8	VITRIFIED CLAY PIPE	SANITARY SEWER	Active	1/1/1979	BASIN 9
3169	47-40_47-39	47-40	47-39	131	8	VITRIFIED CLAY PIPE	SANITARY SEWER	Active	1/1/1980	BASIN 9
3170	47-41_47-39	47-41	47-39	187	8	VITRIFIED CLAY PIPE	SANITARY SEWER	Active	1/1/1980	BASIN 9
3171	47-42_47-41	47-42	47-41	273	8	VITRIFIED CLAY PIPE	SANITARY SEWER	Active	1/1/1980	BASIN 9
3172	47-42_47-43	47-42	47-43	273	8	VITRIFIED CLAY PIPE	SANITARY SEWER	Active	1/1/1980	BASIN 9
3173	47-43_47-27	47-43	47-27	223	8	VITRIFIED CLAY PIPE	SANITARY SEWER	Active	1/1/1980	BASIN 9
3174	47-44_47-43	47-44	47-43	289	8	VITRIFIED CLAY PIPE	SANITARY SEWER	Active	1/1/1983	BASIN 9
3175	47-5_47-6	47-5	47-6	300	8	VITRIFIED CLAY PIPE	SANITARY SEWER	Active	1/1/1979	BASIN 9
3176	4-75_4-76	4-75	4-76	265	8	VITRIFIED CLAY PIPE	SANITARY SEWER	Active	1/1/1990	BASIN 1
3177	47-6_47-7	47-6	47-7	128	8	VITRIFIED CLAY PIPE	SANITARY SEWER	Active	1/1/1979	BASIN 9
3178	4-76_4-77	4-76	4-77	116	8	VITRIFIED CLAY PIPE	SANITARY SEWER	Active	1/1/1990	BASIN 1
3179	47-7_47-8	47-7	47-8	255	8	VITRIFIED CLAY PIPE	SANITARY SEWER	Active	1/1/1979	BASIN 9
3180	4-77_5-82	4-77	5-82	162	8	VITRIFIED CLAY PIPE	SANITARY SEWER	Active	1/1/1990	BASIN 1

3181	47-8_33-10	47-8	33-10	259	8	VITRIFIED CLAY PIPE	SANITARY SEWER	Active	1/1/1979	BASIN 9
3182	4-78R_3-2	4-78R	3-2	136	8	VITRIFIED CLAY PIPE	SANITARY SEWER	Active	1/1/1950	BASIN 1
3183	47-9_47-8	47-9	47-8	157	8	VITRIFIED CLAY PIPE	SANITARY SEWER	Active	1/1/1979	BASIN 9
3184	4-8_4-9	4-8	4-9	201	6	VITRIFIED CLAY PIPE	SANITARY SEWER	Active	1/1/1944	BASIN 1
3185	48-1_47-22	48-1	47-22	273	8	VITRIFIED CLAY PIPE	SANITARY SEWER	Active	1/1/1983	BASIN 9
3186	48-10_48-11	48-10	48-11	193	8	VITRIFIED CLAY PIPE	SANITARY SEWER	Active	1/1/1984	BASIN 9
3187	48-10_48-9	48-10	48-9	221	8	VITRIFIED CLAY PIPE	SANITARY SEWER	Active	1/1/1984	BASIN 9
3188	48-11_48-12	48-11	48-12	300	8	VITRIFIED CLAY PIPE	SANITARY SEWER	Active	1/1/1984	BASIN 9
3189	48-12_48-13	48-12	48-13	311	8	VITRIFIED CLAY PIPE	SANITARY SEWER	Active	1/1/1984	BASIN 9
3190	48-13_48-14	48-13	48-14	233	8	VITRIFIED CLAY PIPE	SANITARY SEWER	Active	1/1/1984	BASIN 9
3191	48-14_48-15	48-14	48-15	289	8	VITRIFIED CLAY PIPE	SANITARY SEWER	Active	1/1/1984	BASIN 9
3192	48-15_47-44	48-15	47-44	289	8	VITRIFIED CLAY PIPE	SANITARY SEWER	Active	1/1/1983	BASIN 9
3193	48-16_48-14	48-16	48-14	317	8	VITRIFIED CLAY PIPE	SANITARY SEWER	Active	1/1/1984	BASIN 9
3194	48-17_48-16	48-17	48-16	200	8	VITRIFIED CLAY PIPE	SANITARY SEWER	Active	1/1/1984	BASIN 9
3195	48-18_48-17	48-18	48-17	127	8	VITRIFIED CLAY PIPE	SANITARY SEWER	Active	1/1/1984	BASIN 9
3196	48-19_48-18	48-19	48-18	92	8	VITRIFIED CLAY PIPE	SANITARY SEWER	Active	1/1/1984	BASIN 9
3197	48-2_48-1	48-2	48-1	275	8	VITRIFIED CLAY PIPE	SANITARY SEWER	Active	1/1/1983	BASIN 9
3198	48-20_48-10	48-20	48-10	99	8	VITRIFIED CLAY PIPE	SANITARY SEWER	Active	1/1/1988	BASIN 9
3199	48-21_48-20	48-21	48-20	291	8	VITRIFIED CLAY PIPE	SANITARY SEWER	Active	1/1/1984	BASIN 9
3200	48-22_48-21	48-22	48-21	266	8	VITRIFIED CLAY PIPE	SANITARY SEWER	Active	1/1/1984	BASIN 9
3201	48-3_48-2	48-3	48-2	287	8	VITRIFIED CLAY PIPE	SANITARY SEWER	Active	1/1/1983	BASIN 9
3202	48-3_48-4	48-3	48-4	327	8	VITRIFIED CLAY PIPE	SANITARY SEWER	Active	1/1/1983	BASIN 9
3203	48-4_48-5	48-4	48-5	300	8	VITRIFIED CLAY PIPE	SANITARY SEWER	Active	1/1/1983	BASIN 9
3204	48-5_47-25	48-5	47-25	300	8	VITRIFIED CLAY PIPE	SANITARY SEWER	Active	1/1/1983	BASIN 9
3205	48-6_47-26	48-6	47-26	300	8	VITRIFIED CLAY PIPE	SANITARY SEWER	Active	1/1/1983	BASIN 9
3206	48-7_48-6	48-7	48-6	300	8	VITRIFIED CLAY PIPE	SANITARY SEWER	Active	1/1/1983	BASIN 9
3207	48-8_48-7	48-8	48-7	245	8	VITRIFIED CLAY PIPE	SANITARY SEWER	Active	1/1/1984	BASIN 9
3208	48-9_48-3	48-9	48-3	250	8	VITRIFIED CLAY PIPE	SANITARY SEWER	Active	1/1/1984	BASIN 9
3209	48-9_48-8	48-9	48-8	276	8	VITRIFIED CLAY PIPE	SANITARY SEWER	Active	1/1/1984	BASIN 9
3210	4-9_4-10	4-9	4-10	18	6	VITRIFIED CLAY PIPE	SANITARY SEWER	Active	1/1/1962	BASIN 1
3211	49-1_48-22	49-1	48-22	336	8	VITRIFIED CLAY PIPE	SANITARY SEWER	Active	1/1/1984	BASIN 9
3212	49-10_49-11	49-10	49-11	235	8	VITRIFIED CLAY PIPE	SANITARY SEWER	Active	1/1/1984	BASIN 9
3213	49-11_49-13	49-11	49-13	290	8	VITRIFIED CLAY PIPE	SANITARY SEWER	Active	1/1/1984	BASIN 9
3214	49-12_49-11	49-12	49-11	115	8	VITRIFIED CLAY PIPE	SANITARY SEWER	Active	1/1/1984	BASIN 9
3215	49-13_49-2	49-13	49-2	272	8	VITRIFIED CLAY PIPE	SANITARY SEWER	Active	1/1/1984	BASIN 9
3218	49-14_49-13	49-14	49-13	365	8	VITRIFIED CLAY PIPE	SANITARY SEWER	Active	1/1/1984	BASIN 9
3219	49-14_49-7	49-14	49-7	238	8	VITRIFIED CLAY PIPE	SANITARY SEWER	Active	1/1/1984	BASIN 9
3220	49-15_49-14	49-15	49-14	110	8	VITRIFIED CLAY PIPE	SANITARY SEWER	Active	1/1/1984	BASIN 9
3221	49-2_49-1	49-2	49-1	313	8	VITRIFIED CLAY PIPE	SANITARY SEWER	Active	1/1/1984	BASIN 9
3222	49-3_49-2	49-3	49-2	243	8	VITRIFIED CLAY PIPE	SANITARY SEWER	Active	1/1/1984	BASIN 9
3223	49-4_49-2	49-4	49-2	236	8	VITRIFIED CLAY PIPE	SANITARY SEWER	Active	1/1/1984	BASIN 9
3224	49-5_49-4	49-5	49-4	300	8	VITRIFIED CLAY PIPE	SANITARY SEWER	Active	1/1/1984	BASIN 9
3225	49-6_49-5	49-6	49-5	205	8	VITRIFIED CLAY PIPE	SANITARY SEWER	Active	1/1/1984	BASIN 9
3226	49-7_49-6	49-7	49-6	270	8	VITRIFIED CLAY PIPE	SANITARY SEWER	Active	1/1/1984	BASIN 9
3227	49-8_49-7	49-8	49-7	223	8	VITRIFIED CLAY PIPE	SANITARY SEWER	Active	1/1/1984	BASIN 9
3228	49-9_49-10	49-9	49-10	207	8	VITRIFIED CLAY PIPE	SANITARY SEWER	Active	1/1/1984	BASIN 9
3229	49-9_49-8	49-9	49-8	224	8	VITRIFIED CLAY PIPE	SANITARY SEWER	Active	1/1/1984	BASIN 9
3230	5-1_5-2	5-1	5-2	40	6	VITRIFIED CLAY PIPE	SANITARY SEWER	Active	1/1/1944	BASIN 1
3231	5-11_5-5	5-11	5-5	162	8	VITRIFIED CLAY PIPE	SANITARY SEWER	Active	1/1/1960	BASIN 1
3232	5-12_5-11	5-12	5-11	349	8	VITRIFIED CLAY PIPE	SANITARY SEWER	Active	1/1/1960	BASIN 1
3233	5-13_5-9	5-13	5-9	150	8	VITRIFIED CLAY PIPE	SANITARY SEWER	Active	1/1/1959	BASIN 1
3234	5-14R_5-13	5-14R	5-13	107	8	VITRIFIED CLAY PIPE	SANITARY SEWER	Active	1/1/1959	BASIN 1
3235	5-15_5-12	5-15	5-12	527	8	VITRIFIED CLAY PIPE	SANITARY SEWER	Active	1/1/1960	BASIN 1
3236	5-16R_5-17	5-16R	5-17	160	8	VITRIFIED CLAY PIPE	SANITARY SEWER	Active	1/1/1954	BASIN 1
3237	5-17_5-18	5-17	5-18	150	8	VITRIFIED CLAY PIPE	SANITARY SEWER	Active	1/1/1954	BASIN 1
3238	5-18_5-19	5-18	5-19	75	8	VITRIFIED CLAY PIPE	SANITARY SEWER	Active	1/1/1954	BASIN 1
3239	5-19_5-20	5-19	5-20	173	8	VITRIFIED CLAY PIPE	SANITARY SEWER	Active	1/1/1954	BASIN 1
3240	5-2_5-71	5-2	5-71	85	6	VITRIFIED CLAY PIPE	SANITARY SEWER	Active	1/1/1944	BASIN 1
3241	5-20_5-22	5-20	5-22	150	8	VITRIFIED CLAY PIPE	SANITARY SEWER	Active	1/1/1954	BASIN 1
3242	5-21_5-20	5-21	5-20	100	8	VITRIFIED CLAY PIPE	SANITARY SEWER	Active	1/1/1963	BASIN 1
3243	5-22_5-23	5-22	5-23	108	6	VITRIFIED CLAY PIPE	SANITARY SEWER	Active	1/1/1954	BASIN 1
3244	5-23_5-24	5-23	5-24	256	6	VITRIFIED CLAY PIPE	SANITARY SEWER	Active	1/1/1954	BASIN 1
3245	5-24_5-25	5-24	5-25	223	8	VITRIFIED CLAY PIPE	SANITARY SEWER	Active	1/1/1960	BASIN 1
3246	5-25_12-85	5-25	12-85	269	6	VITRIFIED CLAY PIPE	SANITARY SEWER	Active	1/1/1944	BASIN 1
3247	5-27_5-24	5-27	5-24	190	8	HIGH DENSITY POLYETHYLENE	SANITARY SEWER	Active	1/1/1962	BASIN 1
3248	5-28_5-27	5-28	5-27	363	8	VITRIFIED CLAY PIPE	SANITARY SEWER	Active	1/1/1962	BASIN 1
3249	5-29R_5-30	5-29R	5-30	145	8	VITRIFIED CLAY PIPE	SANITARY SEWER	Active	1/1/1956	BASIN 1
3250	5-3_4-44	5-3	4-44	375	8	HIGH DENSITY POLYETHYLENE	SANITARY SEWER	Active	3/12/2014	BASIN 1
3251	5-30_5-31	5-30	5-31	133	8	VITRIFIED CLAY PIPE	SANITARY SEWER	Active	1/1/1956	BASIN 1
3252	5-31_5-52	5-31	5-52	128	8	VITRIFIED CLAY PIPE	SANITARY SEWER	Active	1/1/1956	BASIN 1
3253	5-32_5-31	5-32	5-31	203	8	VITRIFIED CLAY PIPE	SANITARY SEWER	Active	1/1/1956	BASIN 1
3254	5-33_5-32	5-33	5-32	148	8	VITRIFIED CLAY PIPE	SANITARY SEWER	Active	1/1/1956	BASIN 1
3255	5-34_5-33	5-34	5-33	210	8	VITRIFIED CLAY PIPE	SANITARY SEWER	Active	1/1/1956	BASIN 1

3256	5-35R_5-67	5-35R	5-67	4	8	VITRIFIED CLAY PIPE	SANITARY SEWER	Active		BASIN 1
3257	5-36R_5-37	5-36R	5-37	281	8	VITRIFIED CLAY PIPE	SANITARY SEWER	Active	1/1/1964	BASIN 1
3258	5-37_5-38	5-37	5-38	244	8	VITRIFIED CLAY PIPE	SANITARY SEWER	Active	1/1/1964	BASIN 1
3259	5-38_5-39	5-38	5-39	299	8	VITRIFIED CLAY PIPE	SANITARY SEWER	Active	1/1/1964	BASIN 1
3260	5-39_4-43	5-39	4-43	300	8	VITRIFIED CLAY PIPE	SANITARY SEWER	Active	1/1/1964	BASIN 1
3261	5-4_5-2	5-4	5-2	106	8	VITRIFIED CLAY PIPE	SANITARY SEWER	Active	1/1/1960	BASIN 1
3262	5-40R_5-41	5-40R	5-41	120	8	VITRIFIED CLAY PIPE	SANITARY SEWER	Active		BASIN 1
3263	5-41_5-42	5-41	5-42	100	8	VITRIFIED CLAY PIPE	SANITARY SEWER	Active		BASIN 1
3264	5-42_5-43	5-42	5-43	151	8	VITRIFIED CLAY PIPE	SANITARY SEWER	Active	1/1/1965	BASIN 1
3265	5-43_5-48	5-43	5-48	170	8	VITRIFIED CLAY PIPE	SANITARY SEWER	Active	1/1/1965	BASIN 1
3266	5-44_5-43	5-44	5-43	337	8	VITRIFIED CLAY PIPE	SANITARY SEWER	Active	1/1/1965	BASIN 1
3267	5-45R_5-46	5-45R	5-46	183	8	VITRIFIED CLAY PIPE	SANITARY SEWER	Active	1/1/1962	BASIN 1
3268	5-46_5-47	5-46	5-47	44	8	VITRIFIED CLAY PIPE	SANITARY SEWER	Active	1/1/1962	BASIN 1
3269	5-47_5-48	5-47	5-48	137	8	VITRIFIED CLAY PIPE	SANITARY SEWER	Active	1/1/1962	BASIN 1
3270	5-48_5-50	5-48	5-50	133	8	VITRIFIED CLAY PIPE	SANITARY SEWER	Active	1/1/1962	BASIN 1
3271	5-49_5-56	5-49	5-56	50	8	VITRIFIED CLAY PIPE	SANITARY SEWER	Active	1/1/1954	BASIN 1
3272	5-5_5-4	5-5	5-4	115	8	VITRIFIED CLAY PIPE	SANITARY SEWER	Active	1/1/1960	BASIN 1
3273	5-50_5-49	5-50	5-49	4	8	VITRIFIED CLAY PIPE	SANITARY SEWER	Active	1/1/1954	BASIN 1
3274	55-1_55-2	55-1	55-2	311	8	VITRIFIED CLAY PIPE	SANITARY SEWER	Active	1/1/1964	BASIN 9
3275	5-51_5-70	5-51	5-70	160	8	VITRIFIED CLAY PIPE	SANITARY SEWER	Active	1/1/1954	BASIN 1
3276	55-10_55-11	55-10	55-11	242	8	VITRIFIED CLAY PIPE	SANITARY SEWER	Active	1/1/1979	BASIN 9
3277	55-11_55-12	55-11	55-12	150	8	VITRIFIED CLAY PIPE	SANITARY SEWER	Active	1/1/1979	BASIN 9
3278	55-12_55-13	55-12	55-13	267	8	VITRIFIED CLAY PIPE	SANITARY SEWER	Active	1/1/1979	BASIN 9
3279	55-13_55-14	55-13	55-14	297	8	VITRIFIED CLAY PIPE	SANITARY SEWER	Active	1/1/1979	BASIN 9
3280	55-14_55-19	55-14	55-19	320	8	VITRIFIED CLAY PIPE	SANITARY SEWER	Active	1/1/1979	BASIN 9
3281	55-15_55-14	55-15	55-14	212	8	VITRIFIED CLAY PIPE	SANITARY SEWER	Active	1/1/1979	BASIN 9
3282	55-16_55-15	55-16	55-15	210	8	VITRIFIED CLAY PIPE	SANITARY SEWER	Active	1/1/1979	BASIN 9
3283	55-17_55-16	55-17	55-16	247	8	VITRIFIED CLAY PIPE	SANITARY SEWER	Active	1/1/1979	BASIN 9
3284	55-18_55-16	55-18	55-16	328	8	VITRIFIED CLAY PIPE	SANITARY SEWER	Active	1/1/1979	BASIN 9
3285	55-19_44-25	55-19	44-25	324	8	VITRIFIED CLAY PIPE	SANITARY SEWER	Active	1/1/1979	BASIN 9
3286	5-52_5-51	5-52	5-51	100	8	VITRIFIED CLAY PIPE	SANITARY SEWER	Active	1/1/1954	BASIN 1
3287	55-2_55-3	55-2	55-3	235	8	VITRIFIED CLAY PIPE	SANITARY SEWER	Active	1/1/1964	BASIN 9
3288	55-20_55-7	55-20	55-7	246	8	VITRIFIED CLAY PIPE	SANITARY SEWER	Active	1/1/1979	BASIN 9
3289	55-21_63-4	55-21	63-4	113	8	VITRIFIED CLAY PIPE	SANITARY SEWER	Active	1/1/1979	BASIN 9
3290	5-53_5-54	5-53	5-54	259	8	VITRIFIED CLAY PIPE	SANITARY SEWER	Active	1/1/1966	BASIN 1
3291	55-3_55-5	55-3	55-5	324	8	VITRIFIED CLAY PIPE	SANITARY SEWER	Active	1/1/1964	BASIN 9
3292	55-4_55-3	55-4	55-3	99	8	VITRIFIED CLAY PIPE	SANITARY SEWER	Active	1/1/1973	BASIN 9
3293	5-54_5-55	5-54	5-55	253	8	VITRIFIED CLAY PIPE	SANITARY SEWER	Active	1/1/1966	BASIN 1
3294	55-5_44-2	55-5	44-2	324	8	VITRIFIED CLAY PIPE	SANITARY SEWER	Active	1/1/1964	BASIN 9
3295	5-55_5-56	5-55	5-56	269	8	VITRIFIED CLAY PIPE	SANITARY SEWER	Active	1/1/1966	BASIN 1
3296	5-56_5-57	5-56	5-57	298	8	VITRIFIED CLAY PIPE	SANITARY SEWER	Active	1/1/1966	BASIN 1
3297	55-7_55-11	55-7	55-11	297	8	VITRIFIED CLAY PIPE	SANITARY SEWER	Active	1/1/1979	BASIN 9
3298	5-57_5-80	5-57	5-80	267	8	VITRIFIED CLAY PIPE	SANITARY SEWER	Active	1/1/1950	BASIN 1
3299	5-58_5-57	5-58	5-57	130	8	VITRIFIED CLAY PIPE	SANITARY SEWER	Active	1/1/1954	BASIN 1
3300	5-59_5-58	5-59	5-58	146	8	VITRIFIED CLAY PIPE	SANITARY SEWER	Active	1/1/1954	BASIN 1
3301	5-6_5-5	5-6	5-5	229	8	VITRIFIED CLAY PIPE	SANITARY SEWER	Active	1/1/1960	BASIN 1
3302	5-60_5-59	5-60	5-59	253	8	VITRIFIED CLAY PIPE	SANITARY SEWER	Active	1/1/1954	BASIN 1
3303	5-61R_5-60	5-61R	5-60	110	8	VITRIFIED CLAY PIPE	SANITARY SEWER	Active	1/1/1954	BASIN 1
3304	5-62_5-58	5-62	5-58	470	8	VITRIFIED CLAY PIPE	SANITARY SEWER	Active	1/1/1954	BASIN 1
3305	5-63_5-79	5-63	5-79	339	8	VITRIFIED CLAY PIPE	SANITARY SEWER	Active	1/1/1955	BASIN 1
3306	5-64_5-63	5-64	5-63	42	8	VITRIFIED CLAY PIPE	SANITARY SEWER	Active	1/1/1955	BASIN 1
3307	5-65R_5-64	5-65R	5-64	245	8	VITRIFIED CLAY PIPE	SANITARY SEWER	Active	1/1/1968	BASIN 1
3308	5-66R_5-53	5-66R	5-53	183	8	VITRIFIED CLAY PIPE	SANITARY SEWER	Active	1/1/1966	BASIN 1
3309	5-67_5-34	5-67	5-34	245	8	VITRIFIED CLAY PIPE	SANITARY SEWER	Active	1/1/1976	BASIN 1
3310	5-68_5-67	5-68	5-67	149	6	VITRIFIED CLAY PIPE	SANITARY SEWER	Active	1/1/1976	BASIN 1
3311	5-7_5-6	5-7	5-6	107	8	VITRIFIED CLAY PIPE	SANITARY SEWER	Active	1/1/1960	BASIN 1
3312	5-70_5-50	5-70	5-50	255	8	VITRIFIED CLAY PIPE	SANITARY SEWER	Active	1/1/1954	BASIN 1
3313	5-71_5-3	5-71	5-3	130	6	VITRIFIED CLAY PIPE	SANITARY SEWER	Active	1/1/1944	BASIN 1
3314	5-72_5-24	5-72	5-24	51	8	VITRIFIED CLAY PIPE	SANITARY SEWER	Active	1/1/1991	BASIN 1
3315	5-73_5-72	5-73	5-72	144	8	VITRIFIED CLAY PIPE	SANITARY SEWER	Active	1/1/1991	BASIN 1
3316	5-74_5-73	5-74	5-73	258	8	VITRIFIED CLAY PIPE	SANITARY SEWER	Active	1/1/1991	BASIN 1
3317	5-75_5-73	5-75	5-73	218	8	VITRIFIED CLAY PIPE	SANITARY SEWER	Active	1/1/1991	BASIN 1
3318	5-76_5-75	5-76	5-75	300	8	VITRIFIED CLAY PIPE	SANITARY SEWER	Active	1/1/1991	BASIN 1
3319	5-77_5-64	5-77	5-64	268	8	VITRIFIED CLAY PIPE	SANITARY SEWER	Active	1/1/1955	BASIN 1
3320	5-78_6-7	5-78	6-7	261	8	VITRIFIED CLAY PIPE	SANITARY SEWER	Active	1/1/1996	BASIN 1
3321	5-78_6-9	5-78	6-9	169	8	VITRIFIED CLAY PIPE	SANITARY SEWER	Active	1/1/1996	BASIN 1
3322	5-79_5-81	5-79	5-81	76	8	VITRIFIED CLAY PIPE	SANITARY SEWER	Active	1/1/1955	BASIN 1
3323	5-8_5-7	5-8	5-7	107	8	VITRIFIED CLAY PIPE	SANITARY SEWER	Active	1/1/1960	BASIN 1
3324	5-80_5-81	5-80	5-81	85	8	VITRIFIED CLAY PIPE	SANITARY SEWER	Active	1/1/1950	BASIN 1
3325	5-81_12-3	5-81	12-3	361	8	VITRIFIED CLAY PIPE	SANITARY SEWER	Active	1/1/1955	BASIN 1
3326	5-82_5-3	5-82	5-3	56	8	VITRIFIED CLAY PIPE	SANITARY SEWER	Active	1/1/1990	BASIN 1
3327	5-9_5-8	5-9	5-8	248	8	VITRIFIED CLAY PIPE	SANITARY SEWER	Active	1/1/1960	BASIN 1
3328	6-1_5-74	6-1	5-74	300	8	VITRIFIED CLAY PIPE	SANITARY SEWER	Active	1/1/1991	BASIN 1

3329	61-1_45-2	61-1	45-2	224	8	VITRIFIED CLAY PIPE	SANITARY SEWER	Active	1/1/1981	BASIN 9
3330	61-10_61-8	61-10	61-8	106	8	VITRIFIED CLAY PIPE	SANITARY SEWER	Active	1/1/1987	BASIN 9
3331	61-11_61-10	61-11	61-10	222	8	VITRIFIED CLAY PIPE	SANITARY SEWER	Active	1/1/1987	BASIN 9
3332	61-12_61-11	61-12	61-11	200	8	VITRIFIED CLAY PIPE	SANITARY SEWER	Active	1/1/1987	BASIN 9
3333	61-13_61-9	61-13	61-9	300	8	VITRIFIED CLAY PIPE	SANITARY SEWER	Active	1/1/1979	BASIN 9
3334	61-14_61-15	61-14	61-15	260	8	VITRIFIED CLAY PIPE	SANITARY SEWER	Active	1/1/1987	BASIN 9
3335	61-15_61-16	61-15	61-16	264	8	VITRIFIED CLAY PIPE	SANITARY SEWER	Active	1/1/1987	BASIN 9
3336	61-16_61-17	61-16	61-17	276	8	VITRIFIED CLAY PIPE	SANITARY SEWER	Active	1/1/1987	BASIN 9
3337	61-17_61-20	61-17	61-20	140	8	VITRIFIED CLAY PIPE	SANITARY SEWER	Active	1/1/1987	BASIN 9
3338	61-18_61-3	61-18	61-3	217	8	VITRIFIED CLAY PIPE	SANITARY SEWER	Active	1/1/1987	BASIN 9
3339	61-2_61-1	61-2	61-1	290	8	VITRIFIED CLAY PIPE	SANITARY SEWER	Active	1/1/1981	BASIN 9
3340	61-20_61-18	61-20	61-18	109	8	VITRIFIED CLAY PIPE	SANITARY SEWER	Active	1/1/1987	BASIN 9
3341	61-3_61-4	61-3	61-4	28	8	VITRIFIED CLAY PIPE	SANITARY SEWER	Active	1/1/1987	BASIN 9
3342	61-4_61-2	61-4	61-2	298	8	VITRIFIED CLAY PIPE	SANITARY SEWER	Active	1/1/1981	BASIN 9
3343	61-5_61-4	61-5	61-4	482	8	VITRIFIED CLAY PIPE	SANITARY SEWER	Active	1/1/1979	BASIN 9
3344	61-6_61-5	61-6	61-5	320	8	VITRIFIED CLAY PIPE	SANITARY SEWER	Active	1/1/1979	BASIN 9
3345	61-7_61-6	61-7	61-6	95	8	VITRIFIED CLAY PIPE	SANITARY SEWER	Active	1/1/1979	BASIN 9
3346	61-8_61-7	61-8	61-7	134	8	VITRIFIED CLAY PIPE	SANITARY SEWER	Active	1/1/1979	BASIN 9
3347	61-9_61-8	61-9	61-8	169	8	VITRIFIED CLAY PIPE	SANITARY SEWER	Active	1/1/1979	BASIN 9
3348	6-2_13-85	6-2	13-85	140	6	VITRIFIED CLAY PIPE	SANITARY SEWER	Active	1/1/1995	BASIN 1
3349	62-1_61-13	62-1	61-13	300	8	VITRIFIED CLAY PIPE	SANITARY SEWER	Active	1/1/1979	BASIN 9
3350	62-10_62-3	62-10	62-3	324	8	VITRIFIED CLAY PIPE	SANITARY SEWER	Active	1/1/1979	BASIN 9
3351	62-11_62-10	62-11	62-10	300	8	VITRIFIED CLAY PIPE	SANITARY SEWER	Active	1/1/1979	BASIN 9
3352	62-12_62-11	62-12	62-11	253	8	VITRIFIED CLAY PIPE	SANITARY SEWER	Active	1/1/1979	BASIN 9
3353	62-12_62-15	62-12	62-15	245	8	VITRIFIED CLAY PIPE	SANITARY SEWER	Active	1/1/1979	BASIN 9
3354	62-13_62-12	62-13	62-12	214	8	VITRIFIED CLAY PIPE	SANITARY SEWER	Active	1/1/1979	BASIN 9
3355	62-14_62-13	62-14	62-13	175	8	VITRIFIED CLAY PIPE	SANITARY SEWER	Active	1/1/1979	BASIN 9
3356	62-15_62-16	62-15	62-16	264	8	VITRIFIED CLAY PIPE	SANITARY SEWER	Active	1/1/1979	BASIN 9
3357	62-15_62-23	62-15	62-23	217	8	VITRIFIED CLAY PIPE	SANITARY SEWER	Active	1/1/1979	BASIN 9
3358	62-16_62-18	62-16	62-18	259	8	VITRIFIED CLAY PIPE	SANITARY SEWER	Active	1/1/1979	BASIN 9
3359	62-17_62-16	62-17	62-16	142	8	VITRIFIED CLAY PIPE	SANITARY SEWER	Active	1/1/1979	BASIN 9
3360	62-18_63-71	62-18	63-71	300	8	VITRIFIED CLAY PIPE	SANITARY SEWER	Active	1/1/1979	BASIN 9
3361	62-2_62-1	62-2	62-1	300	8	VITRIFIED CLAY PIPE	SANITARY SEWER	Active	1/1/1979	BASIN 9
3362	62-20_44-31	62-20	44-31	167	8	VITRIFIED CLAY PIPE	SANITARY SEWER	Active	1/1/1985	BASIN 9
3363	62-21_62-20	62-21	62-20	186	8	VITRIFIED CLAY PIPE	SANITARY SEWER	Active	1/1/1985	BASIN 9
3364	62-21_62-58	62-21	62-58	118	8	VITRIFIED CLAY PIPE	SANITARY SEWER	Active	1/1/1985	BASIN 9
3366	62-22_62-21	62-22	62-21	118	8	VITRIFIED CLAY PIPE	SANITARY SEWER	Active	1/1/1985	BASIN 9
3367	62-23_62-24	62-23	62-24	145	8	VITRIFIED CLAY PIPE	SANITARY SEWER	Active	1/1/1979	BASIN 9
3368	62-24_62-25	62-24	62-25	214	8	VITRIFIED CLAY PIPE	SANITARY SEWER	Active	1/1/1979	BASIN 9
3369	62-25_62-26	62-25	62-26	308	8	VITRIFIED CLAY PIPE	SANITARY SEWER	Active	1/1/1979	BASIN 9
3370	62-26_62-37	62-26	62-37	354	8	VITRIFIED CLAY PIPE	SANITARY SEWER	Active	1/1/1987	BASIN 9
3371	62-27_62-26	62-27	62-26	283	8	VITRIFIED CLAY PIPE	SANITARY SEWER	Active	1/1/1987	BASIN 9
3372	62-27_62-28	62-27	62-28	393	8	VITRIFIED CLAY PIPE	SANITARY SEWER	Active	1/1/1987	BASIN 9
3373	62-28_62-29	62-28	62-29	229	8	VITRIFIED CLAY PIPE	SANITARY SEWER	Active	1/1/1987	BASIN 9
3374	62-29_62-32	62-29	62-32	186	8	VITRIFIED CLAY PIPE	SANITARY SEWER	Active	1/1/1987	BASIN 9
3375	62-3_62-2	62-3	62-2	276	8	VITRIFIED CLAY PIPE	SANITARY SEWER	Active	1/1/1978	BASIN 9
3376	62-30_62-29	62-30	62-29	223	8	VITRIFIED CLAY PIPE	SANITARY SEWER	Active	1/1/1987	BASIN 9
3377	62-31_62-30	62-31	62-30	229	8	VITRIFIED CLAY PIPE	SANITARY SEWER	Active	1/1/1987	BASIN 9
3378	62-32_62-33	62-32	62-33	335	8	VITRIFIED CLAY PIPE	SANITARY SEWER	Active	1/1/1987	BASIN 9
3379	62-33_62-35	62-33	62-35	179	8	VITRIFIED CLAY PIPE	SANITARY SEWER	Active	1/1/1987	BASIN 9
3380	62-34_61-14	62-34	61-14	251	8	VITRIFIED CLAY PIPE	SANITARY SEWER	Active	1/1/1987	BASIN 9
3381	62-35_62-34	62-35	62-34	268	8	VITRIFIED CLAY PIPE	SANITARY SEWER	Active	1/1/1987	BASIN 9
3382	62-36_62-35	62-36	62-35	195	8	VITRIFIED CLAY PIPE	SANITARY SEWER	Active	1/1/1987	BASIN 9
3383	62-37_62-36	62-37	62-36	218	8	VITRIFIED CLAY PIPE	SANITARY SEWER	Active	1/1/1987	BASIN 9
3384	62-39_63-70	62-39	63-70	120	8	VITRIFIED CLAY PIPE	SANITARY SEWER	Active		BASIN 9
3385	62-4_62-3	62-4	62-3	50	8	VITRIFIED CLAY PIPE	SANITARY SEWER	Active	1/1/1987	BASIN 9
3386	62-40_62-39	62-40	62-39	248	8	VITRIFIED CLAY PIPE	SANITARY SEWER	Active		BASIN 9
3387	62-41_62-40	62-41	62-40	170	8	VITRIFIED CLAY PIPE	SANITARY SEWER	Active		BASIN 9
3388	62-42_62-41	62-42	62-41	185	8	VITRIFIED CLAY PIPE	SANITARY SEWER	Active		BASIN 9
3389	62-43_62-42	62-43	62-42	124	8	VITRIFIED CLAY PIPE	SANITARY SEWER	Active		BASIN 9
3390	62-44_62-43	62-44	62-43	274	8	VITRIFIED CLAY PIPE	SANITARY SEWER	Active		BASIN 9
3391	62-45_62-42	62-45	62-42	72	8	VITRIFIED CLAY PIPE	SANITARY SEWER	Active		BASIN 9
3393	62-46_62-45	62-46	62-45	108	8	VITRIFIED CLAY PIPE	SANITARY SEWER	Active		BASIN 9
3394	62-47_62-46	62-47	62-46	48	8	VITRIFIED CLAY PIPE	SANITARY SEWER	Active		BASIN 9
3395	62-48_62-49	62-48	62-49	350	8	VITRIFIED CLAY PIPE	SANITARY SEWER	Active		BASIN 9
3396	62-49_62-47	62-49	62-47	130	8	VITRIFIED CLAY PIPE	SANITARY SEWER	Active		BASIN 9
3397	62-49_62-52	62-49	62-52	21	8	VITRIFIED CLAY PIPE	SANITARY SEWER	Active		BASIN 9
3398	62-5_62-4	62-5	62-4	109	8	VITRIFIED CLAY PIPE	SANITARY SEWER	Active	1/1/1987	BASIN 9
3399	62-50_62-49	62-50	62-49	143	8	VITRIFIED CLAY PIPE	SANITARY SEWER	Active		BASIN 9
3400	62-51_71-13	62-51	71-13	323	8	VITRIFIED CLAY PIPE	SANITARY SEWER	Active		BASIN 9
3401	62-52_62-51	62-52	62-51	320	8	VITRIFIED CLAY PIPE	SANITARY SEWER	Active		BASIN 9
3402	62-53_62-50	62-53	62-50	132	8	VITRIFIED CLAY PIPE	SANITARY SEWER	Active		BASIN 9
3403	62-54_62-53	62-54	62-53	140	8	VITRIFIED CLAY PIPE	SANITARY SEWER	Active		BASIN 9

3404	62-55_62-54	62-55	62-54	125	8	VITRIFIED CLAY PIPE	SANITARY SEWER	Active		BASIN 9
3405	62-56_62-13	62-56	62-13	225	8	VITRIFIED CLAY PIPE	SANITARY SEWER	Active	1/1/1979	BASIN 9
3406	62-57_62-56	62-57	62-56	202	8	VITRIFIED CLAY PIPE	SANITARY SEWER	Active	1/1/1979	BASIN 9
3407	62-58_44-33	62-58	44-33	215	8	VITRIFIED CLAY PIPE	SANITARY SEWER	Active	1/1/1985	BASIN 9
3409	62-6_62-5	62-6	62-5	136	8	VITRIFIED CLAY PIPE	SANITARY SEWER	Active	1/1/1987	BASIN 9
3410	62-7_62-6	62-7	62-6	119	8	VITRIFIED CLAY PIPE	SANITARY SEWER	Active	1/1/1987	BASIN 9
3411	62-7_62-8	62-7	62-8	57	8		SANITARY SEWER	Active	1/1/1987	BASIN 9
3412	62-8_62-5	62-8	62-5	134	8	VITRIFIED CLAY PIPE	SANITARY SEWER	Active	1/1/1987	BASIN 9
3413	62-9_62-7	62-9	62-7	144	8	VITRIFIED CLAY PIPE	SANITARY SEWER	Active	1/1/1987	BASIN 9
3414	6-3_6-2	6-3	6-2	113	8	VITRIFIED CLAY PIPE	SANITARY SEWER	Active	1/1/1996	BASIN 1
3415	63-1_62-18	63-1	62-18	231	8	VITRIFIED CLAY PIPE	SANITARY SEWER	Active	1/1/1979	BASIN 9
3416	63-11_62-56	63-11	62-56	185	8	VITRIFIED CLAY PIPE	SANITARY SEWER	Active	1/1/1979	BASIN 9
3417	63-12_63-11	63-12	63-11	188	8	VITRIFIED CLAY PIPE	SANITARY SEWER	Active	1/1/1979	BASIN 9
3418	63-13_63-17	63-13	63-17	240	8	VITRIFIED CLAY PIPE	SANITARY SEWER	Active	1/1/1979	BASIN 9
3419	63-14_63-13	63-14	63-13	161	8	VITRIFIED CLAY PIPE	SANITARY SEWER	Active	1/1/1983	BASIN 9
3420	63-15_63-14	63-15	63-14	215	8	VITRIFIED CLAY PIPE	SANITARY SEWER	Active	1/1/1983	BASIN 9
3421	63-16_63-15	63-16	63-15	166	8	VITRIFIED CLAY PIPE	SANITARY SEWER	Active	1/1/1983	BASIN 9
3422	63-17_63-18	63-17	63-18	251	8	VITRIFIED CLAY PIPE	SANITARY SEWER	Active	1/1/1979	BASIN 9
3423	63-18_62-57	63-18	62-57	140	8		SANITARY SEWER	Active	1/1/1983	BASIN 9
3424	63-2_63-1	63-2	63-1	189	8	VITRIFIED CLAY PIPE	SANITARY SEWER	Active	1/1/1979	BASIN 9
3425	63-20_62-57	63-20	62-57	221	8	VITRIFIED CLAY PIPE	SANITARY SEWER	Active	1/1/1979	BASIN 9
3426	63-21_63-20	63-21	63-20	269	8	VITRIFIED CLAY PIPE	SANITARY SEWER	Active	1/1/1979	BASIN 9
3427	63-22_63-21	63-22	63-21	132	8	VITRIFIED CLAY PIPE	SANITARY SEWER	Active	1/1/1983	BASIN 9
3428	63-23_63-22	63-23	63-22	171	8	VITRIFIED CLAY PIPE	SANITARY SEWER	Active	1/1/1983	BASIN 9
3430	63-23_63-24	63-23	63-24	161	8	VITRIFIED CLAY PIPE	SANITARY SEWER	Active	1/1/1983	BASIN 9
3431	63-24_63-18	63-24	63-18	138	8	VITRIFIED CLAY PIPE	SANITARY SEWER	Active	1/1/1983	BASIN 9
3432	63-25_63-24	63-25	63-24	231	8	VITRIFIED CLAY PIPE	SANITARY SEWER	Active	1/1/1983	BASIN 9
3433	63-26_63-27	63-26	63-27	199	8	VITRIFIED CLAY PIPE	SANITARY SEWER	Active	1/1/1983	BASIN 9
3434	63-27_63-22	63-27	63-22	207	8	VITRIFIED CLAY PIPE	SANITARY SEWER	Active	1/1/1983	BASIN 9
3435	63-28_63-33	63-28	63-33	235	8	VITRIFIED CLAY PIPE	SANITARY SEWER	Active		BASIN 9
3436	63-29_63-28	63-29	63-28	300	8	VITRIFIED CLAY PIPE	SANITARY SEWER	Active	1/1/1979	BASIN 9
3437	63-3_63-2	63-3	63-2	191	8	VITRIFIED CLAY PIPE	SANITARY SEWER	Active	1/1/1979	BASIN 9
3438	63-3_63-6	63-3	63-6	52	8	VITRIFIED CLAY PIPE	SANITARY SEWER	Active	1/1/1979	BASIN 9
3439	63-30_63-29	63-30	63-29	270	8	VITRIFIED CLAY PIPE	SANITARY SEWER	Active	1/1/1979	BASIN 9
3440	63-31_63-30	63-31	63-30	239	8	VITRIFIED CLAY PIPE	SANITARY SEWER	Active	1/1/1979	BASIN 9
3441	63-32_63-31	63-32	63-31	300	8	VITRIFIED CLAY PIPE	SANITARY SEWER	Active	1/1/1979	BASIN 9
3442	63-33_63-21	63-33	63-21	300	8	VITRIFIED CLAY PIPE	SANITARY SEWER	Active	1/1/1979	BASIN 9
3443	63-34_63-33	63-34	63-33	235	8	VITRIFIED CLAY PIPE	SANITARY SEWER	Active		BASIN 9
3444	63-35_63-30	63-35	63-30	162	8	VITRIFIED CLAY PIPE	SANITARY SEWER	Active	1/1/1979	BASIN 9
3445	63-36_63-35	63-36	63-35	328	8	VITRIFIED CLAY PIPE	SANITARY SEWER	Active	1/1/1979	BASIN 9
3446	63-37_72-21	63-37	72-21	275	8	VITRIFIED CLAY PIPE	SANITARY SEWER	Active		BASIN 9
3447	63-38_62-55	63-38	62-55	150	8	VITRIFIED CLAY PIPE	SANITARY SEWER	Active		BASIN 9
3448	63-39_62-48	63-39	62-48	353	8	VITRIFIED CLAY PIPE	SANITARY SEWER	Active		BASIN 9
3449	63-4_55-10	63-4	55-10	244	8	VITRIFIED CLAY PIPE	SANITARY SEWER	Active	1/1/1979	BASIN 9
3450	63-4_63-3	63-4	63-3	339	8	VITRIFIED CLAY PIPE	SANITARY SEWER	Active	1/1/1979	BASIN 9
3451	63-40_63-39	63-40	63-39	337	8	VITRIFIED CLAY PIPE	SANITARY SEWER	Active		BASIN 9
3452	63-42_63-43	63-42	63-43	85	8	VITRIFIED CLAY PIPE	SANITARY SEWER	Active	10/1/2001	BASIN 9
3453	63-43_63-44	63-43	63-44	242	8	VITRIFIED CLAY PIPE	SANITARY SEWER	Active	10/1/2001	BASIN 9
3454	63-44_64-8	63-44	64-8	278	8	VITRIFIED CLAY PIPE	SANITARY SEWER	Active	10/1/2001	BASIN 9
3455	63-45_63-46	63-45	63-46	161	8	VITRIFIED CLAY PIPE	SANITARY SEWER	Active	10/1/2001	BASIN 9
3456	63-46_63-47	63-46	63-47	256	8	VITRIFIED CLAY PIPE	SANITARY SEWER	Active	10/1/2001	BASIN 9
3457	63-47_63-44	63-47	63-44	19	8	VITRIFIED CLAY PIPE	SANITARY SEWER	Active	10/1/2001	BASIN 9
3458	63-48_63-51	63-48	63-51	405	4	DUCTILE IRON PIPE	FORCE MAIN	Active		BASIN 9
3459	63-49_63-50	63-49	63-50	95	8	VITRIFIED CLAY PIPE	SANITARY SEWER	Active	10/1/2001	BASIN 9
3460	63-5_63-6	63-5	63-6	301	8	VITRIFIED CLAY PIPE	SANITARY SEWER	Active	1/1/1979	BASIN 9
3461	63-50_63-51	63-50	63-51	40	8	VITRIFIED CLAY PIPE	SANITARY SEWER	Active	10/1/2001	BASIN 9
3462	63-51_63-66	63-51	63-66	290	8	VITRIFIED CLAY PIPE	SANITARY SEWER	Active	10/1/2001	BASIN 9
3463	63-53_63-54	63-53	63-54	26	8	VITRIFIED CLAY PIPE	SANITARY SEWER	Active	10/1/2001	BASIN 9
3464	63-54_63-55	63-54	63-55	80	8	VITRIFIED CLAY PIPE	SANITARY SEWER	Active	10/1/2001	BASIN 9
3465	63-55_63-56	63-55	63-56	171	8	VITRIFIED CLAY PIPE	SANITARY SEWER	Active	10/1/2001	BASIN 9
3466	63-56_63-57	63-56	63-57	34	8	VITRIFIED CLAY PIPE	SANITARY SEWER	Active	10/1/2001	BASIN 9
3467	63-57_63-58	63-57	63-58	26	8	VITRIFIED CLAY PIPE	SANITARY SEWER	Active	10/1/2001	BASIN 9
3468	63-58_63-64	63-58	63-64	216	8	VITRIFIED CLAY PIPE	SANITARY SEWER	Active	10/1/2001	BASIN 9
3469	63-59_63-60	63-59	63-60	82	8	VITRIFIED CLAY PIPE	SANITARY SEWER	Active	10/1/2001	BASIN 9
3470	63-6_63-7	63-6	63-7	213	8	VITRIFIED CLAY PIPE	SANITARY SEWER	Active	1/1/1979	BASIN 9
3471	63-60_63-61	63-60	63-61	142	8	VITRIFIED CLAY PIPE	SANITARY SEWER	Active	10/1/2001	BASIN 9
3472	63-61_63-62	63-61	63-62	236	8	VITRIFIED CLAY PIPE	SANITARY SEWER	Active	10/1/2001	BASIN 9
3473	63-62_63-63	63-62	63-63	81	8	VITRIFIED CLAY PIPE	SANITARY SEWER	Active	10/1/2001	BASIN 9
3474	63-63_63-64	63-63	63-64	110	8	VITRIFIED CLAY PIPE	SANITARY SEWER	Active	10/1/2001	BASIN 9
3475	63-64_63-65	63-64	63-65	149	8	VITRIFIED CLAY PIPE	SANITARY SEWER	Active	10/1/2001	BASIN 9
3476	63-65_63-66	63-65	63-66	54	8	VITRIFIED CLAY PIPE	SANITARY SEWER	Active	10/1/2001	BASIN 9
3477	63-66_63-67	63-66	63-67	230	8	VITRIFIED CLAY PIPE	SANITARY SEWER	Active	10/1/2001	BASIN 9
3478	63-67_63-68	63-67	63-68	300	8	VITRIFIED CLAY PIPE	SANITARY SEWER	Active	10/1/2001	BASIN 9

3479	63-68_63-69	63-68	63-69	268	8	VITRIFIED CLAY PIPE	SANITARY SEWER	Active	10/1/2001	BASIN 9
3480	63-69_72-35	63-69	72-35	300	8	VITRIFIED CLAY PIPE	SANITARY SEWER	Active	10/1/2001	BASIN 9
3481	63-7_63-13	63-7	63-13	366	8	VITRIFIED CLAY PIPE	SANITARY SEWER	Active	1/1/1979	BASIN 9
3482	63-7_63-8	63-7	63-8	197	8	VITRIFIED CLAY PIPE	SANITARY SEWER	Active	1/1/1979	BASIN 9
3483	63-70_63-34	63-70	63-34	31	8	VITRIFIED CLAY PIPE	SANITARY SEWER	Active		BASIN 9
3484	63-71_55-17	63-71	55-17	300	8	VITRIFIED CLAY PIPE	SANITARY SEWER	Active	1/1/1979	BASIN 9
3485	63-72_63-36	63-72	63-36	280	8	VITRIFIED CLAY PIPE	SANITARY SEWER	Active	1/1/1979	BASIN 9
3486	63-73_55-20	63-73	55-20	250	8	VITRIFIED CLAY PIPE	SANITARY SEWER	Active	1/1/1979	BASIN 9
3487	63-73_63-5	63-73	63-5	305	8	VITRIFIED CLAY PIPE	SANITARY SEWER	Active	1/1/1979	BASIN 9
3488	63-74_63-72	63-74	63-72	214	8	VITRIFIED CLAY PIPE	SANITARY SEWER	Active	1/1/1998	BASIN 9
3489	63-8_63-9	63-8	63-9	308	8	VITRIFIED CLAY PIPE	SANITARY SEWER	Active	1/1/1979	BASIN 9
3490	63-9_62-14	63-9	62-14	155	8	VITRIFIED CLAY PIPE	SANITARY SEWER	Active	1/1/1979	BASIN 9
3491	6-4_6-3	6-4	6-3	207	8	VITRIFIED CLAY PIPE	SANITARY SEWER	Active	1/1/1996	BASIN 1
3492	64-1_64-2	64-1	64-2	46	8	VITRIFIED CLAY PIPE	SANITARY SEWER	Active	10/1/2001	BASIN 9
3493	64-10_64-8	64-10	64-8	228	8	VITRIFIED CLAY PIPE	SANITARY SEWER	Active	10/1/2001	BASIN 9
3494	64-11_63-48	64-11	63-48	400	4	DUCTILE IRON PIPE	FORCE MAIN	Active		BASIN 9
3495	64-12_64-13	64-12	64-13	353	8	VITRIFIED CLAY PIPE	SANITARY SEWER	Active	10/1/2001	BASIN 9
3496	64-13_64-14	64-13	64-14	274	8	VITRIFIED CLAY PIPE	SANITARY SEWER	Active	10/1/2001	BASIN 9
3497	64-14_63-68	64-14	63-68	292	8	VITRIFIED CLAY PIPE	SANITARY SEWER	Active	10/1/2001	BASIN 9
3498	64-15_PS9	64-15	PS9	61	8	VITRIFIED CLAY PIPE	SANITARY SEWER	Active		BASIN 9
3499	64-16_64-10	64-16	64-10	99	8	VITRIFIED CLAY PIPE	SANITARY SEWER	Active	10/1/2001	BASIN 9
3500	64-2_64-3	64-2	64-3	57	8	VITRIFIED CLAY PIPE	SANITARY SEWER	Active	10/1/2001	BASIN 9
3501	64-3_64-4	64-3	64-4	76	8	VITRIFIED CLAY PIPE	SANITARY SEWER	Active	10/1/2001	BASIN 9
3502	64-4_64-15	64-4	64-15	61	8	VITRIFIED CLAY PIPE	SANITARY SEWER	Active		BASIN 9
3503	64-5_64-4	64-5	64-4	76	8	VITRIFIED CLAY PIPE	SANITARY SEWER	Active	10/1/2001	BASIN 9
3504	64-6_64-5	64-6	64-5	101	8	VITRIFIED CLAY PIPE	SANITARY SEWER	Active	10/1/2001	BASIN 9
3505	64-7_64-6	64-7	64-6	208	8	VITRIFIED CLAY PIPE	SANITARY SEWER	Active	10/1/2001	BASIN 9
3506	64-8_64-7	64-8	64-7	111	8	VITRIFIED CLAY PIPE	SANITARY SEWER	Active	10/1/2001	BASIN 9
3507	64-9_64-10	64-9	64-10	80	8	VITRIFIED CLAY PIPE	SANITARY SEWER	Active	10/1/2001	BASIN 9
3508	6-5_6-4	6-5	6-4	111	8	DUCTILE IRON PIPE	SANITARY SEWER	Active	1/1/1996	BASIN 1
3509	6-6_6-5	6-6	6-5	149	8	VITRIFIED CLAY PIPE	SANITARY SEWER	Active	1/1/1996	BASIN 1
3510	6-7_6-6	6-7	6-6	83	8	VITRIFIED CLAY PIPE	SANITARY SEWER	Active	1/1/1996	BASIN 1
3511	6-8_13-87	6-8	13-87	109	8	VITRIFIED CLAY PIPE	SANITARY SEWER	Active	1/1/1976	BASIN 1
3512	6-9_6-7	6-9	6-7	130	0	VITRIFIED CLAY PIPE	SANITARY SEWER	Active	1/1/1996	BASIN 1
3513	71-1_72-34	71-1	72-34	287	8	VITRIFIED CLAY PIPE	SANITARY SEWER	Active		BASIN 9
3514	71-10_71-11	71-10	71-11	350	8	VITRIFIED CLAY PIPE	SANITARY SEWER	Active		BASIN 9
3515	71-11_71-12	71-11	71-12	295	8	VITRIFIED CLAY PIPE	SANITARY SEWER	Active		BASIN 9
3516	71-12_71-13	71-12	71-13	342	8	VITRIFIED CLAY PIPE	SANITARY SEWER	Active		BASIN 9
3517	71-13_71-22	71-13	71-22	393	8	VITRIFIED CLAY PIPE	SANITARY SEWER	Active		BASIN 9
3518	71-14_71-15	71-14	71-15	232	8	VITRIFIED CLAY PIPE	SANITARY SEWER	Active		BASIN 9
3519	71-15_71-16	71-15	71-16	207	8	VITRIFIED CLAY PIPE	SANITARY SEWER	Active		BASIN 9
3520	71-16_71-17	71-16	71-17	242	8	VITRIFIED CLAY PIPE	SANITARY SEWER	Active		BASIN 9
3521	71-17_71-18	71-17	71-18	314	8	VITRIFIED CLAY PIPE	SANITARY SEWER	Active		BASIN 9
3522	71-18_71-19	71-18	71-19	170	8	VITRIFIED CLAY PIPE	SANITARY SEWER	Active		BASIN 9
3523	71-19_71-20	71-19	71-20	258	8	VITRIFIED CLAY PIPE	SANITARY SEWER	Active		BASIN 9
3524	71-20_71-25	71-20	71-25	127	8	VITRIFIED CLAY PIPE	SANITARY SEWER	Active		BASIN 9
3525	71-21_71-20	71-21	71-20	173	8	VITRIFIED CLAY PIPE	SANITARY SEWER	Active		BASIN 9
3526	71-22_71-21	71-22	71-21	230	8	VITRIFIED CLAY PIPE	SANITARY SEWER	Active		BASIN 9
3527	71-23_62-44	71-23	62-44	386	8	VITRIFIED CLAY PIPE	SANITARY SEWER	Active		BASIN 9
3528	71-24_71-23	71-24	71-23	303	8	VITRIFIED CLAY PIPE	SANITARY SEWER	Active		BASIN 9
3529	71-25_71-24	71-25	71-24	206	8	VITRIFIED CLAY PIPE	SANITARY SEWER	Active		BASIN 9
3530	71-26_71-27	71-26	71-27	221	8	VITRIFIED CLAY PIPE	SANITARY SEWER	Active		BASIN 9
3531	71-27_71-28	71-27	71-28	280	8	VITRIFIED CLAY PIPE	SANITARY SEWER	Active		BASIN 9
3532	71-28_71-29	71-28	71-29	300	8	VITRIFIED CLAY PIPE	SANITARY SEWER	Active		BASIN 9
3533	71-29_71-30	71-29	71-30	297	8	VITRIFIED CLAY PIPE	SANITARY SEWER	Active		BASIN 9
3534	71-3_62-55	71-3	62-55	232	8	VITRIFIED CLAY PIPE	SANITARY SEWER	Active		BASIN 9
3535	71-30_71-33	71-30	71-33	76	8	VITRIFIED CLAY PIPE	TRUNK LINE	Active		BASIN 9
3536	71-31_71-32	71-31	71-32	536	6	DUCTILE IRON PIPE	FORCE MAIN	Active		BASIN 9
3537	71-32_71-9	71-32	71-9	553	6	DUCTILE IRON PIPE	FORCE MAIN	Active		BASIN 9
3538	71-33_71-31	71-33	71-31	107	6	DUCTILE IRON PIPE	FORCE MAIN	Active		BASIN 9
3539	71-4_71-3	71-4	71-3	276	8	VITRIFIED CLAY PIPE	SANITARY SEWER	Active		BASIN 9
3540	71-5_62-50	71-5	62-50	347	8	VITRIFIED CLAY PIPE	SANITARY SEWER	Active		BASIN 9
3541	71-6_71-5	71-6	71-5	374	8	VITRIFIED CLAY PIPE	SANITARY SEWER	Active		BASIN 9
3542	71-7_71-6	71-7	71-6	385	8	VITRIFIED CLAY PIPE	SANITARY SEWER	Active		BASIN 9
3543	71-8_71-9	71-8	71-9	219	8	VITRIFIED CLAY PIPE	SANITARY SEWER	Active		BASIN 9
3544	71-9_71-10	71-9	71-10	290	8	VITRIFIED CLAY PIPE	SANITARY SEWER	Active		BASIN 9
3545	72-1_72-2	72-1	72-2	211	8	VITRIFIED CLAY PIPE	SANITARY SEWER	Active		BASIN 9
3546	72-10_72-12	72-10	72-12	292	8	VITRIFIED CLAY PIPE	SANITARY SEWER	Active		BASIN 9
3547	72-11_72-10	72-11	72-10	111	8	VITRIFIED CLAY PIPE	SANITARY SEWER	Active		BASIN 9
3548	72-12_72-14	72-12	72-14	70	8	VITRIFIED CLAY PIPE	SANITARY SEWER	Active		BASIN 9
3549	72-13_72-17	72-13	72-17	154	8	VITRIFIED CLAY PIPE	SANITARY SEWER	Active		BASIN 9
3550	72-14_72-13	72-14	72-13	19	8	VITRIFIED CLAY PIPE	SANITARY SEWER	Active		BASIN 9
3551	72-15_72-14	72-15	72-14	150	8	VITRIFIED CLAY PIPE	SANITARY SEWER	Active		BASIN 9

3552	72-16_72-15	72-16	72-15	108	8	VITRIFIED CLAY PIPE	SANITARY SEWER	Active		BASIN 9
3553	72-17_63-32	72-17	63-32	192	8	VITRIFIED CLAY PIPE	SANITARY SEWER	Active		BASIN 9
3554	72-18_72-14	72-18	72-14	141	8	VITRIFIED CLAY PIPE	SANITARY SEWER	Active		BASIN 9
3555	72-19_72-18	72-19	72-18	131	8	VITRIFIED CLAY PIPE	SANITARY SEWER	Active		BASIN 9
3556	72-2_72-4	72-2	72-4	103	8	VITRIFIED CLAY PIPE	SANITARY SEWER	Active		BASIN 9
3557	72-20_72-18	72-20	72-18	232	8	VITRIFIED CLAY PIPE	SANITARY SEWER	Active		BASIN 9
3558	72-21_72-20	72-21	72-20	289	8	VITRIFIED CLAY PIPE	SANITARY SEWER	Active		BASIN 9
3559	72-23_63-40	72-23	63-40	349	8	VITRIFIED CLAY PIPE	SANITARY SEWER	Active		BASIN 9
3560	72-24_72-25	72-24	72-25	344	8	VITRIFIED CLAY PIPE	SANITARY SEWER	Active		BASIN 9
3561	72-25_72-26	72-25	72-26	363	8	VITRIFIED CLAY PIPE	SANITARY SEWER	Active		BASIN 9
3562	72-26_72-27	72-26	72-27	313	8	VITRIFIED CLAY PIPE	SANITARY SEWER	Active		BASIN 9
3563	72-27_71-8	72-27	71-8	243	8	VITRIFIED CLAY PIPE	SANITARY SEWER	Active		BASIN 9
3564	72-28_72-27	72-28	72-27	184	8	VITRIFIED CLAY PIPE	SANITARY SEWER	Active		BASIN 9
3565	72-29_71-7	72-29	71-7	422	8	VITRIFIED CLAY PIPE	SANITARY SEWER	Active		BASIN 9
3566	72-3_72-2	72-3	72-2	196	8	VITRIFIED CLAY PIPE	SANITARY SEWER	Active		BASIN 9
3567	72-30_72-29	72-30	72-29	347	8	VITRIFIED CLAY PIPE	SANITARY SEWER	Active		BASIN 9
3576	72-31_72-30	72-31	72-30	267	8	VITRIFIED CLAY PIPE	SANITARY SEWER	Active		BASIN 9
3578	72-32_72-33	72-32	72-33	218	8	VITRIFIED CLAY PIPE	SANITARY SEWER	Active		BASIN 9
3580	72-33_63-38	72-33	63-38	264	8	VITRIFIED CLAY PIPE	SANITARY SEWER	Active		BASIN 9
3581	72-34_72-33	72-34	72-33	361	8	VITRIFIED CLAY PIPE	SANITARY SEWER	Active		BASIN 9
3583	72-35_72-17	72-35	72-17	303	8	VITRIFIED CLAY PIPE	SANITARY SEWER	Active	10/1/2001	BASIN 9
3591	72-4_72-6	72-4	72-6	141	8	VITRIFIED CLAY PIPE	SANITARY SEWER	Active		BASIN 9
3595	72-5_72-6	72-5	72-6	211	8	VITRIFIED CLAY PIPE	SANITARY SEWER	Active		BASIN 9
3596	72-6_72-7	72-6	72-7	154	8	VITRIFIED CLAY PIPE	SANITARY SEWER	Active		BASIN 9
3599	72-7_72-9	72-7	72-9	172	8	VITRIFIED CLAY PIPE	SANITARY SEWER	Active		BASIN 9
3600	72-8_72-7	72-8	72-7	143	8	VITRIFIED CLAY PIPE	SANITARY SEWER	Active		BASIN 9
3601	72-9_72-10	72-9	72-10	300	8	VITRIFIED CLAY PIPE	SANITARY SEWER	Active		BASIN 9
3603	8-1_9-63	8-1	9-63	130	8	VITRIFIED CLAY PIPE	SANITARY SEWER	Active	1/1/1959	BASIN 3
3604	8-10_8-9	8-10	8-9	165	8	VITRIFIED CLAY PIPE	SANITARY SEWER	Active	1/1/1959	BASIN 3
3605	8-11_8-10	8-11	8-10	179	8	VITRIFIED CLAY PIPE	SANITARY SEWER	Active	1/1/1959	BASIN 3
3606	8-12_8-11	8-12	8-11	103	8	VITRIFIED CLAY PIPE	SANITARY SEWER	Active	1/1/1966	BASIN 3
3607	8-13_8-12	8-13	8-12	287	8	VITRIFIED CLAY PIPE	SANITARY SEWER	Active	1/1/1966	BASIN 3
3608	8-130_9-129	8-130	9-129	236	8	VITRIFIED CLAY PIPE	SANITARY SEWER	Active	1/9/1998	BASIN 3
3609	8-14R_8-13	8-14R	8-13	365	8	VITRIFIED CLAY PIPE	SANITARY SEWER	Active	1/1/1966	BASIN 3
3610	8-15_8-11	8-15	8-11	180	8	VITRIFIED CLAY PIPE	SANITARY SEWER	Active	1/1/1959	BASIN 3
3611	8-16_8-15	8-16	8-15	129	8	CAST IRON PIPE	FORCE MAIN	Active	1/1/1959	BASIN 3
3612	8-17_8-16	8-17	8-16	69	6	VITRIFIED CLAY PIPE	FORCE MAIN	Active		BASIN 3
3633	8-18_8-17	8-18	8-17	69	8	VITRIFIED CLAY PIPE	SANITARY SEWER	Active	1/1/1959	BASIN 3
3635	8-19_8-18	8-19	8-18	453	8	VITRIFIED CLAY PIPE	SANITARY SEWER	Active	1/1/1959	BASIN 3
3642	8-2_8-1	8-2	8-1	210	8	VITRIFIED CLAY PIPE	SANITARY SEWER	Active	1/1/1959	BASIN 3
3649	8-20_8-19	8-20	8-19	277	8	VITRIFIED CLAY PIPE	SANITARY SEWER	Active	1/1/1959	BASIN 3
3650	8-21_8-20	8-21	8-20	240	8	VITRIFIED CLAY PIPE	SANITARY SEWER	Active	1/1/1959	BASIN 3
3651	8-22_8-21	8-22	8-21	175	8	VITRIFIED CLAY PIPE	SANITARY SEWER	Active	1/1/1959	BASIN 3
3656	8-23_8-22	8-23	8-22	300	8	VITRIFIED CLAY PIPE	SANITARY SEWER	Active	1/1/1959	BASIN 3
3657	8-24_8-23	8-24	8-23	157	8	VITRIFIED CLAY PIPE	SANITARY SEWER	Active	1/1/1959	BASIN 3
3662	8-25_8-24	8-25	8-24	280	8	VITRIFIED CLAY PIPE	SANITARY SEWER	Active	1/1/1959	BASIN 3
3663	8-26R_8-25	8-26R	8-25	291	8	VITRIFIED CLAY PIPE	SANITARY SEWER	Active	1/1/1959	BASIN 3
3667	8-27R_8-28	8-27R	8-28	197	8	VITRIFIED CLAY PIPE	SANITARY SEWER	Active	1/1/1959	BASIN 3
3674	8-28_8-20	8-28	8-20	478	8	VITRIFIED CLAY PIPE	SANITARY SEWER	Active	1/1/1959	BASIN 3
3676	8-29_8-19	8-29	8-19	185	8	VITRIFIED CLAY PIPE	SANITARY SEWER	Active	1/1/1959	BASIN 3
3677	8-3_8-2	8-3	8-2	193	8	VITRIFIED CLAY PIPE	SANITARY SEWER	Active	1/1/1959	BASIN 3
3678	8-30_8-29	8-30	8-29	260	8	VITRIFIED CLAY PIPE	SANITARY SEWER	Active	1/1/1959	BASIN 3
3679	8-31R_8-30	8-31R	8-30	99	8	VITRIFIED CLAY PIPE	SANITARY SEWER	Active	1/1/1959	BASIN 3
3680	8-32R_8-33	8-32R	8-33	147	8	VITRIFIED CLAY PIPE	SANITARY SEWER	Active	1/1/1971	BASIN 3
3681	8-33_8-29	8-33	8-29	338	8	VITRIFIED CLAY PIPE	SANITARY SEWER	Active	1/1/1959	BASIN 3
3682	8-34_8-33	8-34	8-33	171	8	VITRIFIED CLAY PIPE	SANITARY SEWER	Active	1/1/1972	BASIN 3
3684	8-35_8-34	8-35	8-34	197	8	VITRIFIED CLAY PIPE	SANITARY SEWER	Active	1/1/1961	BASIN 3
3695	8-36_8-35	8-36	8-35	315	8	VITRIFIED CLAY PIPE	SANITARY SEWER	Active	1/1/1961	BASIN 3
3696	8-37_8-36	8-37	8-36	294	8	VITRIFIED CLAY PIPE	SANITARY SEWER	Active	1/1/1961	BASIN 3
3701	8-38_8-34	8-38	8-34	178	8	VITRIFIED CLAY PIPE	SANITARY SEWER	Active	1/1/1961	BASIN 3
3703	8-39_8-38	8-39	8-38	220	8	VITRIFIED CLAY PIPE	SANITARY SEWER	Active	1/1/1961	BASIN 3
3704	8-4_8-3	8-4	8-3	210	8	VITRIFIED CLAY PIPE	SANITARY SEWER	Active	1/1/1959	BASIN 3
3706	8-40_8-39	8-40	8-39	303	8	VITRIFIED CLAY PIPE	SANITARY SEWER	Active	1/1/1959	BASIN 3
3709	8-41_8-39	8-41	8-39	189	8	VITRIFIED CLAY PIPE	SANITARY SEWER	Active	1/1/1961	BASIN 3
3710	8-42_8-41	8-42	8-41	400	8	VITRIFIED CLAY PIPE	SANITARY SEWER	Active	1/1/1959	BASIN 3
3711	8-43R_8-42	8-43R	8-42	175	8	VITRIFIED CLAY PIPE	SANITARY SEWER	Active	1/1/1959	BASIN 3
3712	8-44_8-41	8-44	8-41	276	8	VITRIFIED CLAY PIPE	SANITARY SEWER	Active	1/1/1961	BASIN 3
3713	8-45_8-44	8-45	8-44	345	8	VITRIFIED CLAY PIPE	SANITARY SEWER	Active	1/1/1961	BASIN 3
3714	8-46R_8-45	8-46R	8-45	45	8	VITRIFIED CLAY PIPE	SANITARY SEWER	Active	1/1/1961	BASIN 3
3715	8-47R_8-45	8-47R	8-45	285	6	VITRIFIED CLAY PIPE	SANITARY SEWER	Active	1/1/1964	BASIN 3
3716	8-48R_8-50	8-48R	8-50	100	8	VITRIFIED CLAY PIPE	SANITARY SEWER	Active	1/1/1953	BASIN 3
3717	8-49_8-51	8-49	8-51	140	8	VITRIFIED CLAY PIPE	SANITARY SEWER	Active	1/1/1952	BASIN 3
3718	8-5_8-4	8-5	8-4	300	8	VITRIFIED CLAY PIPE	SANITARY SEWER	Active	1/1/1966	BASIN 3

3719	8-50_8-49	8-50	8-49	183	8	VITRIFIED CLAY PIPE	SANITARY SEWER	Active	1/1/1952	BASIN 3
3720	8-51_16-11	8-51	16-11	177	8	VITRIFIED CLAY PIPE	SANITARY SEWER	Active	1/1/1952	BASIN 3
3721	8-53R_16-2	8-53R	16-2	232	8	VITRIFIED CLAY PIPE	SANITARY SEWER	Active	1/1/1966	BASIN 3
3722	8-54_9-126	8-54	9-126	400	8	VITRIFIED CLAY PIPE	SANITARY SEWER	Active	1/1/1986	BASIN 3
3723	8-7_8-4	8-7	8-4	119	8	VITRIFIED CLAY PIPE	SANITARY SEWER	Active	1/1/1959	BASIN 3
3724	8-8_8-7	8-8	8-7	186	8	VITRIFIED CLAY PIPE	SANITARY SEWER	Active	1/1/1959	BASIN 3
3725	8-9_8-8	8-9	8-8	141	8	VITRIFIED CLAY PIPE	SANITARY SEWER	Active	1/1/1959	BASIN 3
3726	9-100R_9-97	9-100R	9-97	178	8	VITRIFIED CLAY PIPE	SANITARY SEWER	Active	1/1/1952	BASIN 3
3727	9-101_9-102	9-101	9-102	345	8	VITRIFIED CLAY PIPE	SANITARY SEWER	Active	1/1/1961	BASIN 3
3728	9-102_9-126	9-102	9-126	224	8	VITRIFIED CLAY PIPE	SANITARY SEWER	Active		BASIN 3
3729	9-104_17-62	9-104	17-62	258	8	VITRIFIED CLAY PIPE	SANITARY SEWER	Active	1/1/1952	BASIN 3
3730	9-105_9-104	9-105	9-104	193	8	VITRIFIED CLAY PIPE	SANITARY SEWER	Active	1/1/1952	BASIN 3
3731	9-107_9-20	9-107	9-20	123	8	VITRIFIED CLAY PIPE	SANITARY SEWER	Active		BASIN 2
3732	9-108_9-37	9-108	9-37	250	8	VITRIFIED CLAY PIPE	SANITARY SEWER	Active	1/1/1975	BASIN 2
3733	9-109_9-108	9-109	9-108	239	8	VITRIFIED CLAY PIPE	SANITARY SEWER	Active	1/1/1975	BASIN 2
3734	9-10R_9-9	9-10R	9-9	100	8	VITRIFIED CLAY PIPE	SANITARY SEWER	Active	1/1/1952	BASIN 2
3735	9-11_9-12	9-11	9-12	252	8	VITRIFIED CLAY PIPE	SANITARY SEWER	Active	1/1/1952	BASIN 2
3736	9-110_9-112	9-110	9-112	263	8	VITRIFIED CLAY PIPE	SANITARY SEWER	Active	1/1/1976	BASIN 3
3737	9-111_9-112	9-111	9-112	129	8	VITRIFIED CLAY PIPE	SANITARY SEWER	Active	1/1/1975	BASIN 3
3738	9-112_8-5	9-112	8-5	592	8	VITRIFIED CLAY PIPE	SANITARY SEWER	Active	1/1/1975	BASIN 3
3739	9-113_9-57	9-113	9-57	228	8	VITRIFIED CLAY PIPE	SANITARY SEWER	Active	1/1/1979	BASIN 3
3740	9-114_9-57	9-114	9-57	177	8	VITRIFIED CLAY PIPE	SANITARY SEWER	Active	1/1/1979	BASIN 3
3741	9-115_9-116	9-115	9-116	152	8	VITRIFIED CLAY PIPE	SANITARY SEWER	Active	1/1/1979	BASIN 3
3742	9-116_9-118	9-116	9-118	236	8	VITRIFIED CLAY PIPE	SANITARY SEWER	Active	1/1/1979	BASIN 3
3748	9-117_9-118	9-117	9-118	108	8	VITRIFIED CLAY PIPE	SANITARY SEWER	Active	1/1/1979	BASIN 3
3749	9-118_9-119	9-118	9-119	256	8	VITRIFIED CLAY PIPE	SANITARY SEWER	Active	1/1/1979	BASIN 3
3751	9-119_9-120	9-119	9-120	143	8	VITRIFIED CLAY PIPE	SANITARY SEWER	Active	1/1/1979	BASIN 3
3752	9-12_3-79	9-12	3-79	160	8	VITRIFIED CLAY PIPE	SANITARY SEWER	Active	1/1/1952	BASIN 2
3753	9-120_9-121	9-120	9-121	178	8	VITRIFIED CLAY PIPE	SANITARY SEWER	Active	1/1/1981	BASIN 3
3754	9-121_9-42	9-121	9-42	236	8	VITRIFIED CLAY PIPE	SANITARY SEWER	Active	1/1/1979	BASIN 3
3755	9-122_9-40	9-122	9-40	46	8	VITRIFIED CLAY PIPE	SANITARY SEWER	Active	1/1/1990	BASIN 2
3758	9-123_9-122	9-123	9-122	190	8	DUCTILE IRON PIPE	SANITARY SEWER	Active	1/1/1990	BASIN 2
3759	9-124_9-125	9-124	9-125	101	8	VITRIFIED CLAY PIPE	SANITARY SEWER	Active	1/1/1957	BASIN 2
3761	9-125_2-20	9-125	2-20	400	8	VITRIFIED CLAY PIPE	SANITARY SEWER	Active	1/1/1957	BASIN 2
3763	9-126_8-37	9-126	8-37	76	8		SANITARY SEWER	Active		BASIN 3
3765	9-127_10-9	9-127	10-9	150	8	VITRIFIED CLAY PIPE	SANITARY SEWER	Active	1/1/1955	BASIN 2
3768	9-128_10-17	9-128	10-17	50	8	VITRIFIED CLAY PIPE	SANITARY SEWER	Active	1/1/1952	BASIN 3
3770	9-129_9-101	9-129	9-101	244	8	VITRIFIED CLAY PIPE	SANITARY SEWER	Active	1/9/1998	BASIN 3
3773	9-129R_2-29	9-129R	2-29	140	8	VITRIFIED CLAY PIPE	SANITARY SEWER	Active	1/1/1957	BASIN 2
3774	9-13_2-78	9-13	2-78	175	8	VITRIFIED CLAY PIPE	SANITARY SEWER	Active	1/1/1952	BASIN 2
3776	9-130R_2-19	9-130R	2-19	280	8	VITRIFIED CLAY PIPE	SANITARY SEWER	Active	1/1/1961	BASIN 2
3784	9-131_9-122	9-131	9-122	62	8	VITRIFIED CLAY PIPE	SANITARY SEWER	Active	11/17/1998	BASIN 2
3785	9-132R_9-95	9-132R	9-95	63	8		SANITARY SEWER	Active		BASIN 3
3786	9-14_9-13	9-14	9-13	181	8	VITRIFIED CLAY PIPE	SANITARY SEWER	Active	1/1/1952	BASIN 2
3787	9-15R_9-14	9-15R	9-14	75	8	VITRIFIED CLAY PIPE	SANITARY SEWER	Active	1/1/1952	BASIN 2
3788	9-16_9-14	9-16	9-14	165	8	VITRIFIED CLAY PIPE	SANITARY SEWER	Active	1/1/1952	BASIN 2
3789	9-17_9-16	9-17	9-16	145	8	VITRIFIED CLAY PIPE	SANITARY SEWER	Active	1/1/1952	BASIN 2
3790	9-18_9-17	9-18	9-17	209	8	VITRIFIED CLAY PIPE	SANITARY SEWER	Active	1/1/1952	BASIN 2
3792	9-19R_9-18	9-19R	9-18	35	8	VITRIFIED CLAY PIPE	SANITARY SEWER	Active	1/1/1952	BASIN 2
3793	9-1R_9-2	9-1R	9-2	111	8	VITRIFIED CLAY PIPE	SANITARY SEWER	Active	1/1/1965	BASIN 2
3794	9-2_9-3	9-2	9-3	279	8	VITRIFIED CLAY PIPE	SANITARY SEWER	Active	1/1/1965	BASIN 2
3796	9-20_9-22	9-20	9-22	94	8	VITRIFIED CLAY PIPE	SANITARY SEWER	Active	1/1/1954	BASIN 2
3797	9-21_9-107	9-21	9-107	123	8	VITRIFIED CLAY PIPE	SANITARY SEWER	Active	1/1/1954	BASIN 2
3798	9-22_9-6	9-22	9-6	100	0	VITRIFIED CLAY PIPE	SANITARY SEWER	Active		BASIN 2
3799	9-22R_9-21	9-22R	9-21	74	8	VITRIFIED CLAY PIPE	SANITARY SEWER	Active	1/1/1954	BASIN 2
3800	9-23R_9-24	9-23R	9-24	72	8	VITRIFIED CLAY PIPE	SANITARY SEWER	Active	1/1/1954	BASIN 2
3801	9-24_9-25	9-24	9-25	198	8	VITRIFIED CLAY PIPE	SANITARY SEWER	Active	1/1/1954	BASIN 2
3803	9-25_9-26	9-25	9-26	148	8	VITRIFIED CLAY PIPE	SANITARY SEWER	Active	1/1/1954	BASIN 2
3804	9-26_9-20	9-26	9-20	183	8	VITRIFIED CLAY PIPE	SANITARY SEWER	Active	1/1/1954	BASIN 2
3806	9-27R_9-29	9-27R	9-29	216	8	VITRIFIED CLAY PIPE	SANITARY SEWER	Active	1/1/1954	BASIN 2
3807	9-28R_9-29	9-28R	9-29	127	8	VITRIFIED CLAY PIPE	SANITARY SEWER	Active	1/1/1954	BASIN 2
3808	9-29_9-30	9-29	9-30	10	8	VITRIFIED CLAY PIPE	SANITARY SEWER	Active	1/1/1954	BASIN 2
3809	9-3_9-4	9-3	9-4	100	8	VITRIFIED CLAY PIPE	SANITARY SEWER	Active	1/1/1965	BASIN 2
3810	9-30_9-31	9-30	9-31	237	8	VITRIFIED CLAY PIPE	SANITARY SEWER	Active	1/1/1954	BASIN 2
3811	9-31_9-33	9-31	9-33	155	8	VITRIFIED CLAY PIPE	SANITARY SEWER	Active	1/1/1952	BASIN 2
3812	9-32_9-31	9-32	9-31	35	8	VITRIFIED CLAY PIPE	SANITARY SEWER	Active	1/1/1954	BASIN 2
3813	9-33_10-7	9-33	10-7	211	8	VITRIFIED CLAY PIPE	SANITARY SEWER	Active	1/1/1952	BASIN 2
3889	9-34_9-32	9-34	9-32	202	8	VITRIFIED CLAY PIPE	SANITARY SEWER	Active	1/1/1953	BASIN 2
3890	9-35_9-34	9-35	9-34	255	8	VITRIFIED CLAY PIPE	SANITARY SEWER	Active	1/1/1953	BASIN 2
3891	9-36_9-35	9-36	9-35	202	8	VITRIFIED CLAY PIPE	SANITARY SEWER	Active	1/1/1953	BASIN 2
3892	9-37_9-36	9-37	9-36	122	8	VITRIFIED CLAY PIPE	SANITARY SEWER	Active	1/1/1953	BASIN 2
3893	9-38R_9-39	9-38R	9-39	154	8	VITRIFIED CLAY PIPE	SANITARY SEWER	Active	1/1/1955	BASIN 2
3894	9-39_9-127	9-39	9-127	171	8	VITRIFIED CLAY PIPE	SANITARY SEWER	Active	1/1/1955	BASIN 2

3895	9-4_9-5	9-4	9-5	137	8	VITRIFIED CLAY PIPE	SANITARY SEWER	Active	1/1/1954	BASIN 2
3896	9-40_10-12	9-40	10-12	630	8	VITRIFIED CLAY PIPE	SANITARY SEWER	Active	1/1/1955	BASIN 2
3898	9-42_10-16	9-42	10-16	325	8	VITRIFIED CLAY PIPE	SANITARY SEWER	Active	1/1/1952	BASIN 3
3899	9-43_9-121	9-43	9-121	130	8	VITRIFIED CLAY PIPE	SANITARY SEWER	Active	1/1/1952	BASIN 3
3900	9-44_9-43	9-44	9-43	121	8	VITRIFIED CLAY PIPE	SANITARY SEWER	Active	1/1/1952	BASIN 3
3901	9-45_9-44	9-45	9-44	145	8	VITRIFIED CLAY PIPE	SANITARY SEWER	Active	1/1/1952	BASIN 3
3902	9-46_9-45	9-46	9-45	137	8	VITRIFIED CLAY PIPE	SANITARY SEWER	Active	1/1/1952	BASIN 3
3903	9-47R_9-46	9-47R	9-46	121	8	VITRIFIED CLAY PIPE	SANITARY SEWER	Active	1/1/1952	BASIN 3
3905	9-48R_9-49	9-48R	9-49	152	8	POLYVINYLCHLORIDE PIPE	SANITARY SEWER	Active	1/1/1952	BASIN 3
3906	9-49_9-46	9-49	9-46	73	8	VITRIFIED CLAY PIPE	SANITARY SEWER	Active	1/1/1952	BASIN 3
3907	9-5_9-6	9-5	9-6	37	8	VITRIFIED CLAY PIPE	SANITARY SEWER	Active	1/1/1954	BASIN 2
3908	9-50_9-49	9-50	9-49	72	8	VITRIFIED CLAY PIPE	SANITARY SEWER	Active	1/1/1952	BASIN 3
3909	9-51_9-50	9-51	9-50	221	8	VITRIFIED CLAY PIPE	SANITARY SEWER	Active	1/1/1952	BASIN 3
3970	9-52R_9-51	9-52R	9-51	124	8	VITRIFIED CLAY PIPE	SANITARY SEWER	Active	1/1/1952	BASIN 3
3971	9-53_9-51	9-53	9-51	176	8	VITRIFIED CLAY PIPE	SANITARY SEWER	Active	1/1/1952	BASIN 3
3972	9-54R_9-53	9-54R	9-53	194	8	VITRIFIED CLAY PIPE	SANITARY SEWER	Active	1/1/1952	BASIN 3
3973	9-55_9-53	9-55	9-53	400	8	VITRIFIED CLAY PIPE	SANITARY SEWER	Active	1/1/1952	BASIN 3
3974	9-56_9-55	9-56	9-55	90	8	VITRIFIED CLAY PIPE	SANITARY SEWER	Active	1/1/1952	BASIN 3
3976	9-57_9-56	9-57	9-56	266	8	VITRIFIED CLAY PIPE	SANITARY SEWER	Active	1/1/1979	BASIN 3
3977	9-58_9-56	9-58	9-56	170	8	VITRIFIED CLAY PIPE	SANITARY SEWER	Active	1/1/1952	BASIN 3
3978	9-59R_9-58	9-59R	9-58	160	8	VITRIFIED CLAY PIPE	SANITARY SEWER	Active	12/27/1953	BASIN 3
3979	9-6_9-7	9-6	9-7	200	8	VITRIFIED CLAY PIPE	SANITARY SEWER	Active	1/1/1952	BASIN 2
3981	9-60_9-53	9-60	9-53	167	8	VITRIFIED CLAY PIPE	SANITARY SEWER	Active	1/1/1952	BASIN 3
3988	9-61_9-60	9-61	9-60	74	8	VITRIFIED CLAY PIPE	SANITARY SEWER	Active	1/1/1957	BASIN 3
3989	9-62_9-61	9-62	9-61	231	8	VITRIFIED CLAY PIPE	SANITARY SEWER	Active	1/1/1957	BASIN 3
3992	9-63_9-62	9-63	9-62	125	8	VITRIFIED CLAY PIPE	SANITARY SEWER	Active	1/1/1957	BASIN 3
3993	9-64_9-63	9-64	9-63	163	8	VITRIFIED CLAY PIPE	SANITARY SEWER	Active	1/1/1957	BASIN 3
3995	9-65_9-64	9-65	9-64	217	8	VITRIFIED CLAY PIPE	SANITARY SEWER	Active	1/1/1957	BASIN 3
3996	9-66R_9-65	9-66R	9-65	244	8	VITRIFIED CLAY PIPE	SANITARY SEWER	Active	1/1/1962	BASIN 3
3997	9-67R_8-36	9-67R	8-36	367	8	VITRIFIED CLAY PIPE	SANITARY SEWER	Active	1/1/1961	BASIN 3
3998	9-68R_9-69	9-68R	9-69	167	8	VITRIFIED CLAY PIPE	SANITARY SEWER	Active	1/1/1952	BASIN 3
3999	9-69_9-70	9-69	9-70	217	8	VITRIFIED CLAY PIPE	SANITARY SEWER	Active	1/1/1952	BASIN 3
4001	9-7_9-8	9-7	9-8	187	8	VITRIFIED CLAY PIPE	SANITARY SEWER	Active	1/1/1952	BASIN 2
4002	9-70_9-72	9-70	9-72	247	8	VITRIFIED CLAY PIPE	SANITARY SEWER	Active	1/1/1952	BASIN 3
4003	9-71R_9-72	9-71R	9-72	38	8	VITRIFIED CLAY PIPE	SANITARY SEWER	Active	1/1/1952	BASIN 3
4004	9-72_9-73	9-72	9-73	189	8	VITRIFIED CLAY PIPE	SANITARY SEWER	Active	1/1/1952	BASIN 3
4005	9-73_9-74	9-73	9-74	116	8	VITRIFIED CLAY PIPE	SANITARY SEWER	Active	1/1/1952	BASIN 3
4006	9-74_9-75	9-74	9-75	184	8	VITRIFIED CLAY PIPE	SANITARY SEWER	Active	1/1/1952	BASIN 3
4007	9-75_9-76	9-75	9-76	137	8	VITRIFIED CLAY PIPE	SANITARY SEWER	Active	1/1/1952	BASIN 3
4009	9-76_9-77	9-76	9-77	100	8	VITRIFIED CLAY PIPE	SANITARY SEWER	Active	1/1/1952	BASIN 3
4010	9-77_9-78	9-77	9-78	210	8	VITRIFIED CLAY PIPE	SANITARY SEWER	Active	1/1/1952	BASIN 3
4011	9-78_9-128	9-78	9-128	153	8	VITRIFIED CLAY PIPE	SANITARY SEWER	Active	1/1/1952	BASIN 3
4012	9-8_9-9	9-8	9-9	238	8	VITRIFIED CLAY PIPE	SANITARY SEWER	Active	1/1/1952	BASIN 2
4013	9-80_9-81	9-80	9-81	119	8	VITRIFIED CLAY PIPE	SANITARY SEWER	Active	1/1/1952	BASIN 3
4014	9-81_10-29	9-81	10-29	472	8	VITRIFIED CLAY PIPE	SANITARY SEWER	Active	1/1/1952	BASIN 3
4019	9-82_10-17	10-17	9-82	426	8	VITRIFIED CLAY PIPE	SANITARY SEWER	Active	1/1/1952	BASIN 3
4020	9-83_9-82	9-83	9-82	169	8	VITRIFIED CLAY PIPE	SANITARY SEWER	Active	1/1/1952	BASIN 3
4022	9-84_9-83	9-84	9-83	134	8	VITRIFIED CLAY PIPE	SANITARY SEWER	Active	1/1/1955	BASIN 3
4023	9-85R_9-84	9-85R	9-84	184	8	VITRIFIED CLAY PIPE	SANITARY SEWER	Active	1/1/1955	BASIN 3
4024	9-86_9-83	9-86	9-83	145	8	VITRIFIED CLAY PIPE	SANITARY SEWER	Active	1/1/1952	BASIN 3
4025	9-87_9-86	9-87	9-86	181	8	VITRIFIED CLAY PIPE	SANITARY SEWER	Active	1/1/1952	BASIN 3
4026	9-88_9-87	9-88	9-87	215	8	VITRIFIED CLAY PIPE	SANITARY SEWER	Active	1/1/1952	BASIN 3
4027	9-89_9-88	9-89	9-88	159	8	VITRIFIED CLAY PIPE	SANITARY SEWER	Active	1/1/1952	BASIN 3
4028	9-9_9-11	9-9	9-11	110	8	VITRIFIED CLAY PIPE	SANITARY SEWER	Active	1/1/1952	BASIN 2
4029	9-90_9-89	9-90	9-89	240	8	VITRIFIED CLAY PIPE	SANITARY SEWER	Active	1/1/1952	BASIN 3
4030	9-91_9-90	9-91	9-90	190	8	VITRIFIED CLAY PIPE	SANITARY SEWER	Active	1/1/1952	BASIN 3
4033	9-92_9-91	9-92	9-91	150	8	VITRIFIED CLAY PIPE	SANITARY SEWER	Active	1/1/1952	BASIN 3
4034	9-93R_9-92	9-93R	9-92	182	8	VITRIFIED CLAY PIPE	SANITARY SEWER	Active	1/1/1952	BASIN 3
4035	9-94_9-89	9-94	9-89	130	8	VITRIFIED CLAY PIPE	SANITARY SEWER	Active	1/1/1952	BASIN 3
4036	9-95_9-94	9-95	9-94	310	8	VITRIFIED CLAY PIPE	SANITARY SEWER	Active	1/1/1952	BASIN 3
4037	9-96_9-95	9-96	9-95	168	8	VITRIFIED CLAY PIPE	SANITARY SEWER	Active	1/1/1952	BASIN 3
4038	9-97_9-96	9-97	9-96	65	8	VITRIFIED CLAY PIPE	SANITARY SEWER	Active	1/1/1952	BASIN 3
4039	9-98_9-97	9-98	9-97	167	8	VITRIFIED CLAY PIPE	SANITARY SEWER	Active	1/1/1952	BASIN 3
4040	9-99R_9-98	9-99R	9-98	237	8	VITRIFIED CLAY PIPE	SANITARY SEWER	Active	1/1/1952	BASIN 3
4041	PS11_17-66	PS11	17-66	576	4	HIGH DENSITY POLYETHYLENE	FORCE MAIN	Active	5/21/2004	BASIN 3
4046	PS7_46-6	PS07	46-6	100	8	DUCTILE IRON PIPE	FORCE MAIN	Active	1/1/1987	BASIN 9
4054	PS7_46-7	PS07	46-7	60	8	DUCTILE IRON PIPE	OVERFLOW	Active		BASIN 9
4056	PS9_64-11	PS9	64-11	388	4	DUCTILE IRON PIPE	FORCE MAIN	Active		BASIN 9
4057	T10_T11	T10	T11	419	36	VITRIFIED CLAY PIPE	TRUNK LINE	Active		OUTFALL
4058	T11_T12	T11	T12	1,047	36	VITRIFIED CLAY PIPE	TRUNK LINE	Active		OUTFALL
4059	T12_T13	T12	T13	335	36	VITRIFIED CLAY PIPE	TRUNK LINE	Active		OUTFALL
4060	T13_T14	T13	T14	664	36	VITRIFIED CLAY PIPE	TRUNK LINE	Active		OUTFALL
4061	T14_T15	T14	T15	729	36	VITRIFIED CLAY PIPE	TRUNK LINE	Active		OUTFALL

4063	T15_T16	T15	T16	122	36	VITRIFIED CLAY PIPE	TRUNK LINE	Active		OUTFALL
4070	T16_T17	T16	T17	1,407	36	VITRIFIED CLAY PIPE	TRUNK LINE	Active		OUTFALL
4071	T17_T18	T17	T18	858	36	VITRIFIED CLAY PIPE	TRUNK LINE	Active		OUTFALL
4072	T18_T19	T18	T19	746	36	VITRIFIED CLAY PIPE	TRUNK LINE	Active		OUTFALL
4073	T19_T20	T19	T20	830	36	VITRIFIED CLAY PIPE	TRUNK LINE	Active		OUTFALL
4075	T2_T3	T2	T3	1,211	36	VITRIFIED CLAY PIPE	TRUNK LINE	Active		OUTFALL
4076	T20_T21	T20	T21	1,073	39	VITRIFIED CLAY PIPE	TRUNK LINE	Active		OUTFALL
4082	T21_T22	T21	T22	1,001	39	VITRIFIED CLAY PIPE	TRUNK LINE	Active		OUTFALL
4083	T22_T23	T22	T23	803	39	VITRIFIED CLAY PIPE	TRUNK LINE	Active		OUTFALL
4084	T23_T24	T23	T24	471	39	VITRIFIED CLAY PIPE	TRUNK LINE	Active		OUTFALL
4085	T24_T25	T24	T25	983	39	VITRIFIED CLAY PIPE	TRUNK LINE	Active		OUTFALL
4086	T25_T26	T25	T26	341	39	VITRIFIED CLAY PIPE	TRUNK LINE	Active		OUTFALL
4087	T26_T27	T26	T27	787	39	VITRIFIED CLAY PIPE	TRUNK LINE	Active		OUTFALL
4088	T27_T28	T27	T28	683	39	VITRIFIED CLAY PIPE	TRUNK LINE	Active		OUTFALL
4089	T28_T29	T28	T29	1,087	42	VITRIFIED CLAY PIPE	TRUNK LINE	Active		OUTFALL
4090	T29_T30	T29	T30	1,103	42	VITRIFIED CLAY PIPE	TRUNK LINE	Active		OUTFALL
4091	T3_T4	T3	T4	57	36	VITRIFIED CLAY PIPE	TRUNK LINE	Active		OUTFALL
4093	T30_T31	T30	T31	471	42	VITRIFIED CLAY PIPE	TRUNK LINE	Active		OUTFALL
4094	T31_T32	T31	T32	824	42	VITRIFIED CLAY PIPE	TRUNK LINE	Active		OUTFALL
4095	T32_T33	T32	T33	727	42	VITRIFIED CLAY PIPE	TRUNK LINE	Active		OUTFALL
4096	T33_T34	T33	T34	6	54	REINFORCED CONCRETE PIPE	TRUNK LINE	Active		OUTFALL
4031	T34_T35	T34	T35	851	54	REINFORCED CONCRETE PIPE	TRUNK LINE	Active		OUTFALL
4043	T35_T36	T35	T36	379	54	REINFORCED CONCRETE PIPE	TRUNK LINE	Active		OUTFALL
4044	T36_T37	T36	T37	664	54	REINFORCED CONCRETE PIPE	TRUNK LINE	Active		OUTFALL
4045	T37_T38	T37	T38	593	54	REINFORCED CONCRETE PIPE	TRUNK LINE	Active		OUTFALL
4047	T38_T39	T38	T39	928	54	REINFORCED CONCRETE PIPE	TRUNK LINE	Active		OUTFALL
4048	T39_T40	T39	T40	40	54	REINFORCED CONCRETE PIPE	TRUNK LINE	Active		OUTFALL
4049	T4_T5	T4	T5	70	36	VITRIFIED CLAY PIPE	TRUNK LINE	Active		OUTFALL
4052	T40_T41	T40	T41	640	54	REINFORCED CONCRETE PIPE	TRUNK LINE	Active		OUTFALL
4055	T5_T6	T5	T6	582	36	VITRIFIED CLAY PIPE	TRUNK LINE	Active		OUTFALL
4065	T6_T7	T6	T7	361	36	VITRIFIED CLAY PIPE	TRUNK LINE	Active		OUTFALL
4066	T7_T8	T7	T8	1,152	33	VITRIFIED CLAY PIPE	TRUNK LINE	Active		OUTFALL
4068	T8_T9	T8	T9	321	33	VITRIFIED CLAY PIPE	TRUNK LINE	Active		OUTFALL
4069	T9_T10	T9	T10	382	33	VITRIFIED CLAY PIPE	TRUNK LINE	Active		OUTFALL
Total Length (feet):				**789,085**						
Total Length (miles):				**149**						

(THIS PAGE INTENTIONALLY LEFT BLANK)

APPENDIX E

CVSan Budget

RESOLUTION NO. 3489

RESOLUTION OF THE DISTRICT BOARD OF THE CASTRO VALLEY SANITARY DISTRICT, ALAMEDA COUNTY, STATE OF CALIFORNIA ADOPTING BUDGET ESTIMATES FOR THE FISCAL YEARS 2021/22 AND 2022/23

RESOLVED by the Sanitary District Board of the Castro Valley Sanitary District, Alameda County, California, pursuant to Government Code 29001, that the following be, and the same is hereby adopted, as the estimate for the amount of money required during the fiscal years 2021/2022 and 2022/2023:

OPERATION AND MAINTENANCE		**FY 2021/22**		**FY 2022/23**
Business Services Expense	$	3,096,484	$	3,274,296
Wastewater Collection Expense		8,496,127		8,546,189
Zero Waste Expense		1,066,651		1,135,901
Wastewater Treatment & Disposal		4,096,262		4,005,212
Non-Operating Expense		7,682		7,682
Reserves / Contingency / Other		1,572,501		1,697,987
		18,335,707		18,667,267
Less: Anticipated Income	-	18,335,707		18,667,267

CAPITAL PROJECTS				
Wastewater Treatment Plant	$	2,875,913	$	255,913
Wastewater Collection System		3,765,000		407,000
Administration / CVSan		3,077,000		10,160,000
		9,717,913		10,822,913
Less: Funds Allocated From Reserves	-	9,717,913		10,822,913
TAX REVENUE REQUIRED		**-0-**		**-0-**

AND BE IT FURTHER RESOLVED that the Castro Valley Sanitary District does not require a tax rate to be levied for operation and maintenance;

AND BE IT FURTHER RESOLVED that a certified copy of this resolution be forwarded to the Auditor of Alameda County pursuant to law.

..... ooo O ooo .....

I hereby certify that the foregoing Resolution No. 3489 was adopted by the District Board of the Castro Valley Sanitary District at a regular meeting thereof held on the 4th day of May 2021, by the following vote:

AYES: Directors Akagi, (Dooman) Woerz, Johnson, McGowan, and Sadoff

NOES: None

ABSENT: None

ABSTAIN: None

Timothy McGowan,
Secretary of the Sanitary Board

APPROVED:

Ralph Johnson,
President of the Sanitary Board

(THIS PAGE INTENTIONALLY LEFT BLANK)

APPENDIX F

Historical SSO Events

Historical SSO Table

Historical SSO Map

Item No.	Discharge Type	CVSan Event ID	CIWQS Event ID	CIWQS Status	CIWQS Category	Estimated SSO Date	Estimated SSO Volume	SSO Cause	Pipe No.	Manhole No.	Location	Comments
1	SSO	2007-01	651510	Certified	Category 3	2007/06/07	275	Root Intrusion	42-13_42-12	42-13	Greenridge Rd	
2	SSO	2007-02	657080	Certified	Category 1	2007/09/10	1725	Capacity Failure	18-103_18-116		Seven Hills Rd	Hydraulic reduction 8" to 6".
3	SSO	2008-01	710846	Certified	Category 1	2008/01/04	2250	Capacity Failure	18-19_27-69		Joseph Drive and Vernon Ct	Surcharge at MH18-19; TVI reports flat pipeline - records indicate adequate slope.
4	SSO	2008-02	710850	Certified	Category 1	2008/01/04	2250	Capacity Failure			Redwood Rd	Overflow at MH28-85
5	SSO	2008-03	710857	Certified	Category 1	2008/01/04	2250	Capacity Failure	28-86_28-83	28-86	Redwood Rd	Overflow at MH28-86;
6	SSO	2008-04	710859	Certified	Category 3	2008/01/04	2250	Capacity Failure	28-83_28-60	28-83	Redwood Rd	Spill appearance point at MH28-83
7	SSO	2008-05	710862	Certified	Category 3	2008/01/04	2250	Capacity Failure	28-83_28-60	28-60	Redwood Rd	Spill appearance point at MH28-60
8	SSO	2008-06	711350	Certified	Category 1	2008/01/13	150	Root Intrusion	27-39_27-113		Mancini	
9	SSO	2008-07	714924	Certified	Category 1	2008/03/16	750	FOG	20-45_21-89		San Miguel Ave	
10	SSO	2008-08	717857	Certified	Category 1	2008/05/21	750	FOG	28-77_28-76		James Ave	
11	SSO	2008-09	720116	Certified	Category 3	2008/06/23	925	Root Intrusion			Garrison Ave	
12	SSO	2008-10	723324	Certified	Category 1	2008/07/23	750	Root Intrusion	34-5_27-120		Madison Ave	
13	SSO	2008-11	725194	Certified	Category 3	2008/08/25	1700	Root Intrusion	20-66_20-84		Anita Ave	
14	SSO	2008-12	728482	Certified	Category 2	2008/10/24	75	Root Intrusion	19-62_19-61		San Miguel Ave	
15	SSO	2009-01	733814	Certified	Category 3	2009/02/16	375	Debris	MH42-13	MH42-13	Greenridge Rd	
16	SSO	2009-02	734185	Certified	Category 3	2009/02/24	92	Root Intrusion	CO at 4107 Ravenwood	CO at 4107 Ravenwood	Ravenwood Pl	
17	SSO	2009-03	738650	Certified	Category 1	2009/06/07	300	Root Intrusion	MH34-46	MH34-46	Rahlves Dr	
18	SSO	2009-04	745658	Certified	Category 1	2009/10/13	8550	Capacity Failure	MH19-46	MH19-46	Garrison Rd	
19	SSO	2009-05	746677	Certified	Category 2	2009/11/10	2025	Debris	MH27-12	MH27-12	Seaview Rd	
20	SSO	2009-06	746765	Certified	Category 3	2009/11/12	330	Root Intrusion	CO at 18777 Almond	CO at 18777 Almond	Almond Rd	
21	SSO	2009-07	746764	Certified	Category 2	2009/11/13	5629	Root Intrusion	CO at 3991 Seven Hills	CO at 3991 Seven Hills	Seven Hills Rd	
22	SSO	2009-08	746767	Certified	Category 2	2009/11/15	1242	Root Intrusion	CO at 21480 Orange	CO at 21480 Orange	Orange Ave	
23	SSO	2009-09	747499	Certified	Category 3	2009/12/09	29	Root Intrusion	CO at 4233 Nando	CO at 4233 Nando	Nando Ct	
24	SSO	2010-01	748248	Certified	Category 2	2010/01/06	2075	FOG	14-19_14-20	14-19_14-20	Strobridge Ave	
25	SSO	2010-02	748711	Certified	Category 2	2010/01/20	24000	Capacity Failure	19-38_19-42	19-38_19-42	Santa Maria Ave	
26	SSO	2010-03	748719	Certified	Category 2	2010/01/20	3000	Capacity Failure	19-27_19-28	19-27_19-28	Patton Ave	
27	SSO	2010-04	748720	Certified	Category 2	2010/01/20	3000	Capacity Failure	19-27_19-28	19-27_19-28	Patton Ave	
28	SSO	2010-05	757166	Certified	Category 3	2010/09/25	500	Pump Station Failure (electrical)	8-17_8-16	8-17_8-16	Grovenor Dr	
29	SSO	2010-06	758895	Certified	Category 3	2010/11/23	350	Root Intrusion	27-39_27-113	27-39_27-113	Haley Dr	
30	SSO	2010-07	759866	Certified	Category 2	2010/12/26	1125	Debris	27-7_27-12	27-7_27-12	Rockhurst Rd	
31	SSO	2011-01	766169	Certified	Category 3	2011/03/22	375	FOG	8-15_8-11	8-15_8-11	Grovenor Dr	
32	SSOLAT	2012-01	776795	Certified	Category 2	2012/01/02	1250	Root Intrusion	22-85_22-86	22-85_22-86	Orange Ave	
33	SSO	2012-02	780568	Certified	Category 2	2012/03/16	16050	Root Intrusion	28-42_28-41	28-42_28-41	James Ave	
34	SSO	2012-03	785704	Certified	Category 1	2012/04/13	16000	Pump Station Failure (electrical)	8-17_8-16	8-17_8-16	Grovenor Dr	
35	SSO	2012-04	785272	Certified	Category 2	2012/08/10	1035	Root Intrusion	42-67_42-3	42-67_42-3	Crow Canyon Rd	
36	SSO	2012-05	788847	Certified	Category 1	2012/11/30	6750	Root Intrusion	27-21_27-119	27-21_27-119	Elrod Dr	
37	SSO	2012-06	790691	Certified	Category 1	2012/11/30	300	Root Intrusion	34-3_34-5	34-3_34-5	Madison Ave	
38	SSOLAT	2012-07	788855	Certified	Category 1	2012/12/02	465	FOG	27-85_27-82	27-85_27-82	Emily Ct	
39	SSO	2013-01	790673	Certified	Category 1	2013/01/19	2775	Root Intrusion	45-4_45-5	45-4_45-5	Coldwater Dr	
40	SSO	2013-02	790687	Certified	Category 1	2013/01/20	900	Unidentified	19-43_19-44	19-43_19-44	Santa Maria Ave	
41	SSO	2013-03	793064	Certified	Category 3	2013/01/31	840	FOG	36-69_36-68	36-69_36-68	Crow Canyon Rd	
42	SSO	2013-04	792664	Certified	Category 3	2013/02/27	44	Debris	18-24R_18-25	18-24R_18-25	Gordon Rd	
43	SSO	2013-05	793712	Certified	Category 1	2013/04/27	15900	Construction Debris	27-127_27-99	27-127_27-99	Redwood Rd & Gordon Rd	
44	SSO	2013-06	794626	Certified	Category 3	2013/04/27	800	FOG	20-84_20-68	20-84_20-68	Anita Ave	
45	SSO	2013-07	794769	Certified	Category 3	2013/05/23	640	Root Intrusion	27-104_27-58	27-104_27-58	Pepper St	
46	SSO	2013-08	799275	Certified	Category 3	2013/08/19	65	Lateral Debris	34-24_34-13	34-24_34-13	Madison Ave	
47	SSO	2013-09	800380	Certified	Category 3	2013/09/02	96	Root Intrusion	29-46_29-45	29-46_29-45	Fern Wy	
48	SSO	2013-10	800391	Certified	Category 3	2013/10/01	718	Pump Station Failure (mechanical)	26-3_26-4	26-3_26-4	Camino Alta Mira	
49	SSO	2013-11	800405	Certified	Category 1	2013/10/25	915	FOG	29-39_30-99	29-39_30-99	Omega Ave	
50	SSO	2014-01	803519	Certified	Category 3	2014/01/13	240	FOG	32-18_32-20	32-18_32-20	Queen St	
51	SSO	2014-02	803520	Certified	Category 2	2014/01/31	5250	Vandalism	35-58_36-3	35-58_36-3	Heyer Ave	
52	SSO	2014-03	803762	Certified	Category 1	2014/02/07	170	Root Intrusion	27-9_27-8	27-9_27-8	Trenton Dr	
53	SSO	2014-04	804362	Certified	Category 1	2014/02/28	295	FOG	20-6R_19-46	20-6R_19-46	Garrison Ave	
54	SSOLAT	2014-05	NA	NA	Category 3	2014/02/28		Root Intrusion	28-62_28-63	28-62_28-63	Alma Ave	
55	SSO	2014-06	807162	Certified	Category 2	2014/05/30	6518	Construction Debris	46-6_16-5	46-6_16-5	East Castro Valley Blvd	
56	SSO	2014-07	808494	Certified	Category 1	2014/08/15	2900	Vermin	12-4_12-5	12-4_12-5	Stanton Rd	
57	SSO	2014-08	811417	Certified	Category 1	2014/12/11	1840	Capacity Failure	27-66_28-85 28-85_28-86 28-86_28-83 28-83_28-60		Redwood Rd	
58	SSO	2015-01	813957	Certified	Category 3	2015/03/15	750	Root Intrusion	29-42_29-40	29-42	Alana Rd	
59	SSO	2015-02	817563	Certified	Category 3	2015/07/25	225	Root Intrusion	CO at 19972 Stanton Ave	CO at 19972 Stanton Ave	Stanton Ave	
60	SSO	2015-03	817568	Certified	Category 3	2015/07/27	5	Root Intrusion	28-69_28-71	28-69	Sandy Rd	
61	SSO	2015-04	817566	Certified	Category 3	2015/07/28	390	Operator Error	Pump Station	64-1	Buren Place	
62	SSO	2015-05	817986	Certified	Category 3	2015/09/07	185	Debris from Lateral	11-55_11-56	11-55	Keith Ave	
63	SSO	2015-06	818293	Certified	Category 3	2015/09/11	5	Grease Deposition (FOG)	31-45_31-91	31-45_31-91	Vegas Ave	
64	SSO	2015-07	818907	Certified	Category 3	2015/09/11	150	Construction Diversion Failure	-	-	Hunters Knoll	
65	SSO	2015-08	819526	Certified	Category 3	2015/10/28	200	Root Intrusion	CO at MF residential unit	CO at MF residential unit	Lake Chabot Road	
66	SSO	2016-01	822770	Certified	Category 3	2016/02/12	50	Grease Deposition (FOG)	9-80_9-81	9-80	Lamson Rd	
67	SSO	2016-02	827059	Certified	Category 3	2016/03/28	100	Non-Dispersables	24-12R_24-11	24-11	A St	
68	SSO	2017-01	832976	Certified	Category 1	2017/02/20	20250	Capacity Failure	35-60_35-59	35-59	Center St	
69	SSO	2018-01	843479	Certified	Category 1	2018/01/02	5250	Non-Dispersables	27-126_27-127	27-127	Redwood Rd	
70	SSO	2019-01	857740	Certified	Category 3	2019/04/18	80	Grease Deposition (FOG)	24-5_24-4	24-5	Crescent Ave	
71	SSO	2019-02	862447	Certified	Category 3	2019/10/27	150	Grease Deposition (FOG)	21-5_22-9	21-5	Redwood Rd.	
72	SSO	2020-01	866530	Certified	Category 3	2020/05/01	200	Grease Deposition (FOG)	6-2_13-85	6-2	Stanton Hill Rd.	
73	SSO	2020-02	869438	Certified	Category 1	2020/10/05	400	Non-Dispersables		31-91	Watson Ave	

Item No.	Discharge Type	CVSan Event ID	CIWQS Event ID	CIWQS Status	CIWQS Category	Estimated SSO Date	Estimated SSO Volume	SSO Cause	Pipe No.	Manhole No.	Location	Comments
74	SSO	2020-03	870992	Certified	Category 3	2020/12/10	140	Root Intrusion			Barlow Dr.	
75	SSO	2021-01	874117	Certified	Category 1	2021/05/15	6000	Grease Deposition (FOG)			CVHS	
76	SSO	2021-02	874118	Certified	Category 1	2021/05/15	6000	Grease Deposition (FOG)			CVHS	
77	SSO	2021-03	874119	Certified	Category 1	2021/05/15	6000	Grease Deposition (FOG)			CVHS	
78	SSO	2021-04	878330	Certified	Category 1	2021/12/27	2000	Grease Deposition (FOG)		23-42	Baywood Ave	
79	SSO	2022-01	878840	Certified	Category 3	2022/01/15	14	Grease Deposition (FOG)			Vegas Ave	
80	SSO	2022-02	879513	Certified	Category 1	2022/02/22	1500	Root Intrusion			Greenridge Rd	

Last Saved: 12/21/2022 3:07:43 PM X:\Projects\Custom Maps\SSO Incident Maps\2022\SSO SSMP_2022.mxd : matthewl

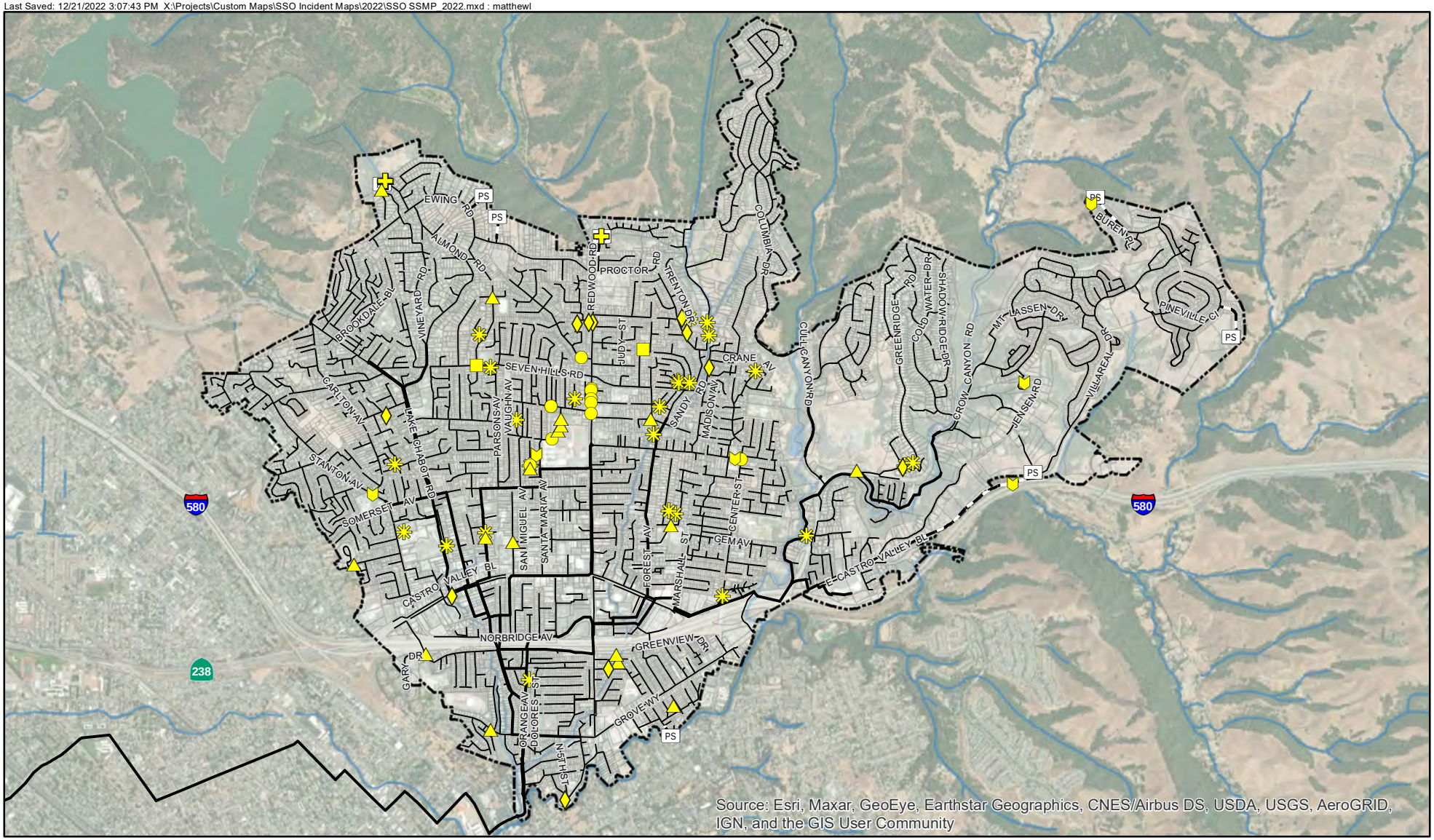

Symbology

- District Boundary
- Pump Station
- Force Main
- Gravity Sewer Trunk (≥ 12-inches)
- Gravity Sewer Collector (≤ 10-inches)

Spill Cause

- Root Intrusion
- Grease Deposition
- Capacity
- Debris
- Pump Station Failure
- Structural Failure
- Other

Notes:
1. Spills in the "Other" category include the following causes (1 spill each): Construction Diversion Failure, Damage by Others, Operator Error, Vandalism, Vermin, and Unknown.
2. Source: CIWQS, 12/16/2022

N

0 1,800 3,600

Scale in Feet

CVSan

WEST YOST ASSOCIATES

Appendix F

Sanitary Sewer Overflow Locations, 2007 - 2022

Castro Valley Sanitary District
Sewer System Management Plan

(THIS PAGE INTENTIONALLY LEFT BLANK)

APPENDIX G

Gravity Sewer Asset Management Plan

Updated Gravity Sewer Asset Management Plan Risk Scores

Gravity Sewer
Asset Management Plan

Prepared for

CVSan

August 2015

REGISTERED PROFESSIONAL ENGINEER
LANI GOOD
C 73677
EXP. 3/31/17
CIVIL
STATE OF CALIFORNIA

WEST YOST ASSOCIATES
Consulting Engineers

455-06-13-03

This report printed on 50% post-consumer paper

(THIS PAGE LEFT BLANK INTENTIONALLY)

Table of Contents

1.0 Introduction 1
2.0 Levels of Service 1
3.0 Asset Inventory 2
4.0 Condition Assessment 2
4.1 Inspection Records 2
4.2 Condition Assessment Methodology 4
4.2.1 Defect Scoring 4
4.2.2 Pipe Segment Scoring 4
5.0 Risk Assessment 5
5.1 Likelihood of Failure Analysis 5
5.2 Consequence of Failure Analysis 11
5.3 Risk Assessment Results 18
6.0 Rehab/Replacement Program 19
6.1 Rehab/Replacement Methodology 19
6.2 Fy 2014/15 Gravity Sewer Rehab/Replacement Project 22
7.0 Preventative Maintenance Program 23
8.0 Next Steps: Program Improvements for FY 2015/16 23

List of Tables

Table 1. Proposed Levels of Service 1
Table 2. Likelihood of Failure Rating Factors 11
Table 3. Consequence of Failure Rating Factors 18
Table 4. Risk Matrix 19
Table 7. Planning-Level Unit Costs 22
Table 8. Program Improvements for FY 2015/16 23

List of Figures

Figure 1. System Map 3
Figure 2. Likelihood of Failure – Defect Score 6
Figure 3. Likelihood of Failure – Installation Year 8
Figure 4. Likelihood of Failure – Work Order History 9
Figure 5. Likelihood of Failure - Hydraulic Capacity Deficiency 10
Figure 6. Consequence of Failure – Potential Spill Volume 13
Figure 7. Consequence of Failure – Environmental Impacts 14

Figure 8. Consequence of Failure – Public Health Impacts 15
Figure 9. Consequence of Failure – Traffic Impacts 16
Figure 10. Consequence of Failure – Emergency Response Impacts 17
Figure 11. Risk Assessment Results 20
Figure 12. Preliminary Rehab/Replacement Decision Tree 21

List of Appendices

Appendix A: CCTV Defect Code List
Appendix B: FY 2014/15 Gravity Sewer Rehab/Replacement Project

1.0 INTRODUCTION

This report documents the status of the Gravity Sewer Asset Management Plan (AMP) established for the Castro Valley Sanitary District (CVSan). The goal of the AMP is to establish a consistent, repeatable process for CVSan staff to follow to manage (maintain and improve) its assets and create a Rehab/Replacement Program that can meet the District's desired levels of service. This report documents the process of the CVSan Gravity Sewer AMP through assessing asset condition, analyzing failure risks, and developing an optimized rehabilitation (rehab) and replacement plan.

The major elements of this report include the following:

1. Introduction
2. Levels of Service
3. Asset Inventory
4. Condition Assessment
5. Risk Assessment
6. Rehab/Replacement Program
7. Preventative Maintenance Program
8. Next Steps: Program Improvements for Fiscal Year (FY) 2015/16

2.0 LEVELS OF SERVICE

CVSan's Strategic Plan and Vision Statement were reviewed to develop the levels of service in Table 1. These levels of service allow CVSan to focus its efforts and resources, communicate service expectations and choices, and negotiate risk levels and rates with regulators and the Board of Directors.

Table 1. Proposed Levels of Service

Serve Customers/ Reduce Complaint Calls	Increase System Reliability	Comply with Regulations[1]
• Avoid blockages, backups and overflows • Effectively control costs • Maintain cost effective and efficient work practices • Respond quickly and correctly to calls	• Proactively maintain the system • Reduce hot spots and high-frequency preventative maintenance areas • Proactively replace infrastructure • Reduce emergency repairs (caused by structural failure)	• Improve system to reduce the risk of SSO • Reduce I/I • Provide safe facilities

[1] Specific regulations include State environmental regulations such as the Sanitary Sewer Management Plan (SSMP), Waste Discharge Requirements (WDR) and Monitoring and Reporting Program (MRP), as well as federal regulations including Occupations Safety and Health Administration (OSHA).

3.0 ASSET INVENTORY

CVSan currently has a robust asset registry in the Lucity™ Computerized Maintenance Management System (CMMS), which stores physical asset properties (including pipe diameter, material and installation date), and maintenance work order history such as preventative maintenance schedules and blockage responses. CVSan's graphic information system (GIS) is also populated with the geospatial coordinates of the collection system assets. CVSan's collection system consists of approximately 148 miles of gravity sewer pipe (94 percent of which is vitrified clay pipe (VCP)), 1.9 miles of force main, and nine pump stations, all of which are shown on Figure 1. Data validation checks indicate that data gaps in the asset registry appear to be minor, and CVSan is continually improving the registry as new information is gathered in the field.

4.0 CONDITION ASSESSMENT

This section describes the condition inspection and assessment methodology.

4.1 Inspection Records

CVSan currently conducts condition assessment of all gravity sewers by Closed Circuit Television (CCTV) inspection. CVSan follows the standardized method of coding defects developed by the National Association of Sewer Service Companies (NASSCO)'s Pipeline Assessment Certification Program (PACP).

Condition assessment data for the gravity portions of the collection system has been collected by CVSan since 1997. The recent (2006 to present) data collected by CVSan is currently in three separate data formats due to various upgrades of CCTV software over time. Additionally, a contractor provided CCTV inspection services for a portion of the system, which is documented in a fourth data format. These datasets include:

1. Wincan1: 2,948 inspections recorded from June 2006 to February 2010;
2. Wincan2: 1,437 inspections recorded from March 2010 to September 2012;
3. H&R: Contractor conducted 31 inspections in Spring 2012; and
4. Granite XP: 361 inspections recorded from June 2013 to March 2014. Current database used by CVSan CCTV inspectors.

For older data from the Wincan1 and Wincan2 databases, some adjustments had to be made to allow data import for inclusion in the analysis.

- 341 observations from Wincan1 and 22 observations from Wincan2 did not have an observation code or observation text. These observations were assigned the general observation code, which receives a "CVSan Severity" score of zero.
- 20,748 observations from Wincan1 did not have an observation code. Observation codes were added manually by inspection of observation text and comparison to related text in Wincan2.

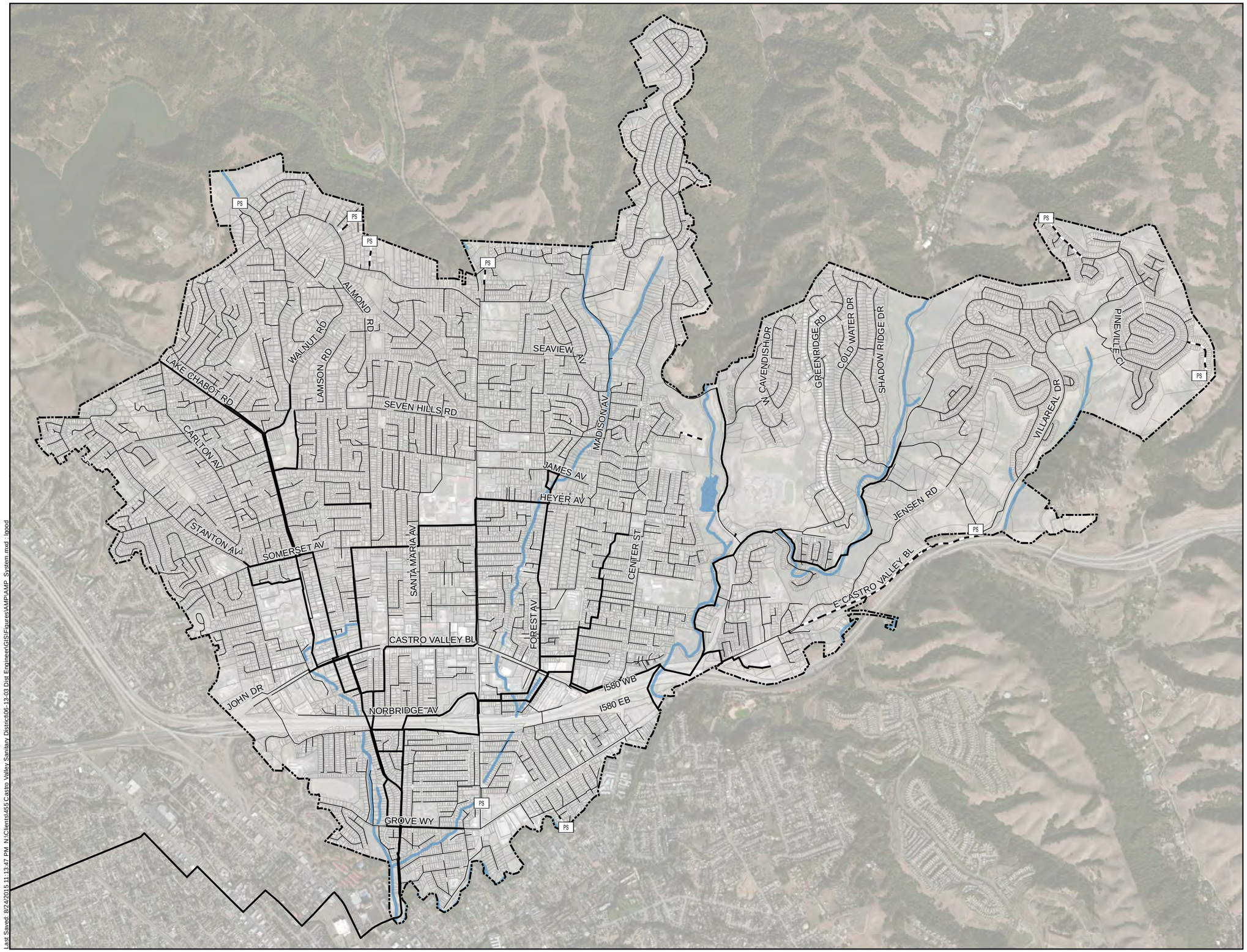

N

0 1,500 3,000

Scale in Feet

Symbology

District Boundary

PumpStations

SewerType

Force Main

Gravity Main

Gravity Trunk Line

Figure 1

System Map

Castro Valley Sanitary District
Asset Management Plan

Last Saved: 8/24/2015 11:13:47 PM N:\Clients\455 Castro Valley Sanitary District\06-13-03 Dist Engineer\GIS\Figures\AMP\AMP_System.mxd jgood

(THIS PAGE LEFT BLANK INTENTIONALLY)

- 41 inspections from Wincan1 were missing inspection dates and 10 inspections had faulty inspection dates. These inspections with missing inspection dates were conservatively assumed to have occurred at the start of Wincan1 use, 1/1/2006. Those with faulty dates of 6/16/1009 were assumed to have occurred on 6/16/2009.

4.2 Condition Assessment Methodology

The methodology employed to assess the condition of the sewers that have valid CCTV inspection data available consists of the following two-step process:

1. Defect Scoring. Score the severity of individual defects.
2. Pipe Segment Scoring. Assign a severity score to each pipe segment (from manhole to manhole) based on the severity of the individual defects on that pipe segment.

4.2.1 Defect Scoring

CVSan wastewater and maintenance staff developed a customized scoring system for defects. This system uses PACP guidelines for coding defects in the field, but assigns a customized scoring to these defects to provide higher consideration of defects that might cause a structural failure or allow a larger volume of inflow and infiltration to enter the system. This "CVSan Severity" scale defines a system for ranking maintenance and structural defects on a 1 to 4 scale, as detailed in Table 2, with 4 being the most severe.

Table 2. CVSan Defect Scoring

CVSan Severity Score	Action
0	No action – General Observation
1	No action – Routine Maintenance
2	Watch – Preventative Maintenance Program Review
3	Investigate – Rehabilitation/Replacement Program Review
4	Rehab/replace – Rehabilitation/Replacement Program

Defects and the corresponding CVSan Severity Score are included in Attachment A.

4.2.2 Pipe Segment Scoring

For each CCTV inspection, the defects recorded for each pipe segment (from manhole to manhole) were compiled into a four-digit code denoted the "CVSan Score" through a count of the number of defects rated 1, 2, 3, and 4, similar to the PACP scoring system. Any count greater than 9 defaulted to a count of 9 to adhere to the 4-digit system. Any score of 0 through this system refers to an inspection with zero observations, and refers to a pipe with no defects.

Many pipes had multiple CCTV inspections, and due to the difference in the defects recorded each time, each inspection yielded a different 4-digit CVSan Score. Initial review revealed that many of the inspections are not complete inspections of the entire pipe, but rather limited inspections to evaluate a portion of pipe following a spot repair or blockage. These partial inspections posed an issue in obtaining the most representative condition score for the pipe. It would be preferential to assume that the most recent inspection has the most up-to-date condition information reflective of any recent repair work, but in many cases the most current inspection showed no issues. To address this issue, the highest inspection score recorded over the 8-year period of record was used.

5.0 RISK ASSESSMENT

The risk assessment evaluated the likelihood and consequence of a sewer failure. For this analysis, a sewer failure is considered to be a failure that could result in a sanitary sewer overflow (SSO). SSOs are violations of state and federal laws and can adversely impact the environment and public health. SSOs can also require costly emergency repairs which are disruptive to the community.

The likelihood of failure assesses the probability that a failure will occur. The consequence of failure considers the impact an SSO may have on public health, the environment, and the community. A risk model was developed in MS Access to perform the risk assessment calculations. A rating for both likelihood and consequence of failure was assigned by the model to each pipe segment. The risk assessment model then combined the likelihood of failure ratings with the consequence of failure ratings to develop a comprehensive risk rating. This section summarizes the analysis that used available information to assign a risk level for each pipeline segment.

5.1 Likelihood of Failure Analysis

The likelihood of failure analysis considers the probability that a failure will occur in a given pipeline segment.

5.1.1 Likelihood Criteria

CVSan's collection system consists primarily of vitrified clay pipe (VCP). VCP sewer pipelines have the following principal failure modes:

1. Structural Failure
2. Maintenance Failure
3. Capacity-Related SSOs

For each failure mode, one or more factors are considered in determining the likelihood of a failure, as discussed below.

Structural Failure. VCP is brittle, and cracks or breaks can progress to pipeline collapse. The severity of cracks and defects is documented through CCTV inspection. The likelihood of structural failure is determined by using the CVSan Defect Score (shown on Figure 2), which provides a standardized metric for comparing CCTV defects across the system. Of the 3,605 gravity pipes in the system, 1,039 pipes (29-percent) did not have any history of CCTV inspection.

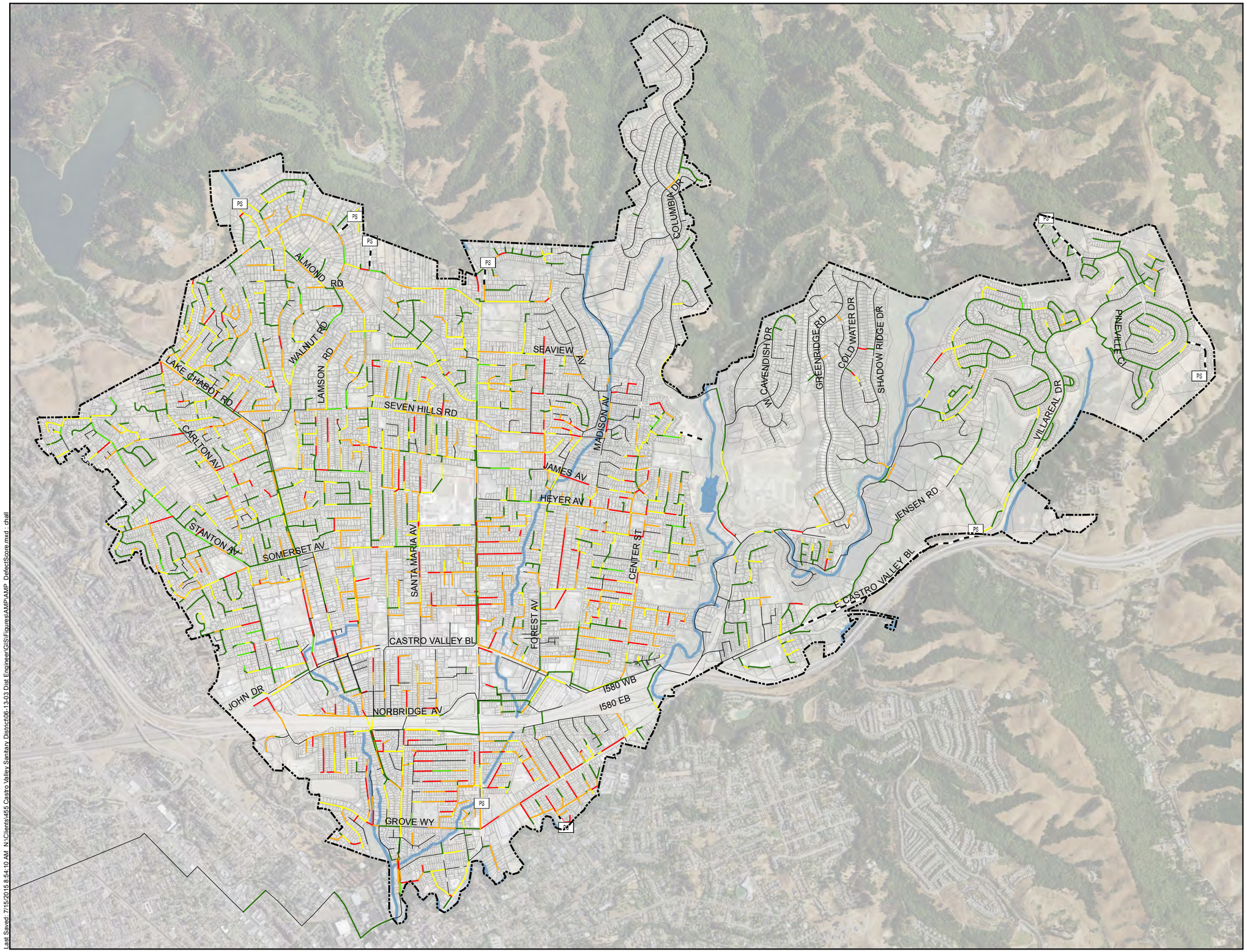

N

0 1,500 3,000

Scale in Feet

Symbology

- District Boundary
- PumpStations
- Force Main

Gravity Main - CVSan Defect Score

- < 1300
- 1300 - 2100
- 2100 -3200
- 3200 - 4100
- ≥ 4100
- No Inspection on Record

CVSan

WEST YOST ASSOCIATES

Figure 2

Likelihood of Failure
CVSan Pipe Defect Score

Castro Valley Sanitary District
Asset Management Plan

Last Saved: 7/15/2015 8:54:10 AM N:\Clients\455 Castro Valley Sanitary District\06-13-03 Dist Engineer\GIS\Figures\AMP\AMP_DefectScore.mxd : chall

(THIS PAGE LEFT BLANK INTENTIONALLY)

Instead, the structural failure likelihood was assessed using the installation year (shown on Figure 3). VCP sewers installed before 1958 have short lengths (therefore, numerous joints) with cement mortar joints, which shrink and crack and allow much higher rates of infiltration and root intrusion than post-1958 sewers that use rubber-gasket joints. Also, the CVSan General Manager noted that CVSan has anecdotally experienced more frequent failures in pipelines installed prior to 1970, presumably due to improper installation techniques (poor soil conditions, inadequate pipe bedding, etc.). For sewers with unknown installation years and no inspection information, a rating of 5 was conservatively assigned.

Maintenance Blockages. Maintenance problems related to root intrusions, grease accumulations, and debris can cause blockages and result in SSOs. CVSan currently has a robust asset registry in the Lucity™ CMMS, which stores physical asset properties (including pipe diameter, material, and installation date) and maintenance work order history such as preventative maintenance schedules and blockage and sanitary sewer overflow (SSO) responses. The number of maintenance work orders (depicted in Figure 4) for each asset from January 1, 2006 through August 14, 2014, is expected to relatively correlate to the severity of maintenance issues such as with root intrusion, grease accumulation, and sediment accumulation.

Inadequate Hydraulic Capacity. Hydraulic restrictions or bottlenecks cause surcharging, which can lead to SSOs at or upstream of the location of the restriction. A pipeline segment with a hydraulic restriction (a bottleneck) is defined as a segment for which the projected peak flow (q) exceeds the full-pipe, gravity flow capacity (Q) of the given segment. CVSan has previously identified areas suspected of having inadequate hydraulic capacity (see Figure 5), and has scheduled improvement projects for Aspen Avenue/Pine Street, Belle Street, Forest Avenue, Lower Lake Chabot Road, Marshall Street, Redwood Road, and Sandy Road.

5.1.2 Likelihood Criteria Rating Methodology

Each pipe segment is rated by the model for each likelihood of failure category factor on a scale of one to five with five indicating the highest likelihood of failure. The methodology for rating each pipeline segment is summarized in Table 3.

(THIS PAGE LEFT BLANK INTENTIONALLY)

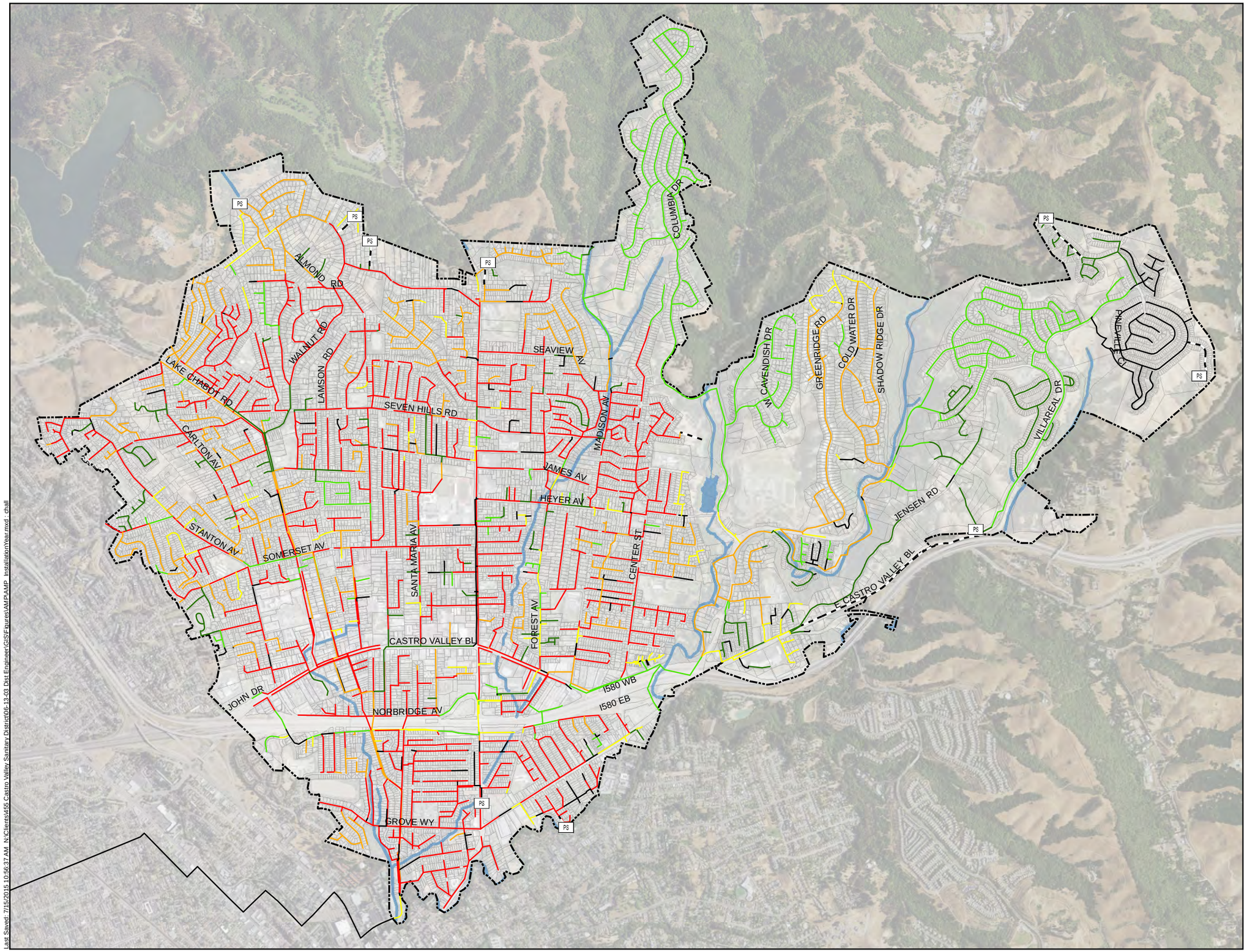

N

0 1,500 3,000

Scale in Feet

Symbology

- District Boundary
- PumpStations
- Force Main

Gravity Main - Installation Year

- Post-1985
- 1975-1985
- 1965-1975
- 1955-1965
- Pre-1955
- Unknown Installation Year

CVSan

WEST YOST ASSOCIATES

Figure 3

Likelihood of Failure Installation Year

Castro Valley Sanitary District
Asset Management Plan

Last Saved: 7/15/2015 10:56:37 AM N:\Clients\455 Castro Valley Sanitary District\06-13-03 Dist Engineer\GIS\Figures\AM\PAMP_InstallationYear.mxd chall

(THIS PAGE LEFT BLANK INTENTIONALLY)

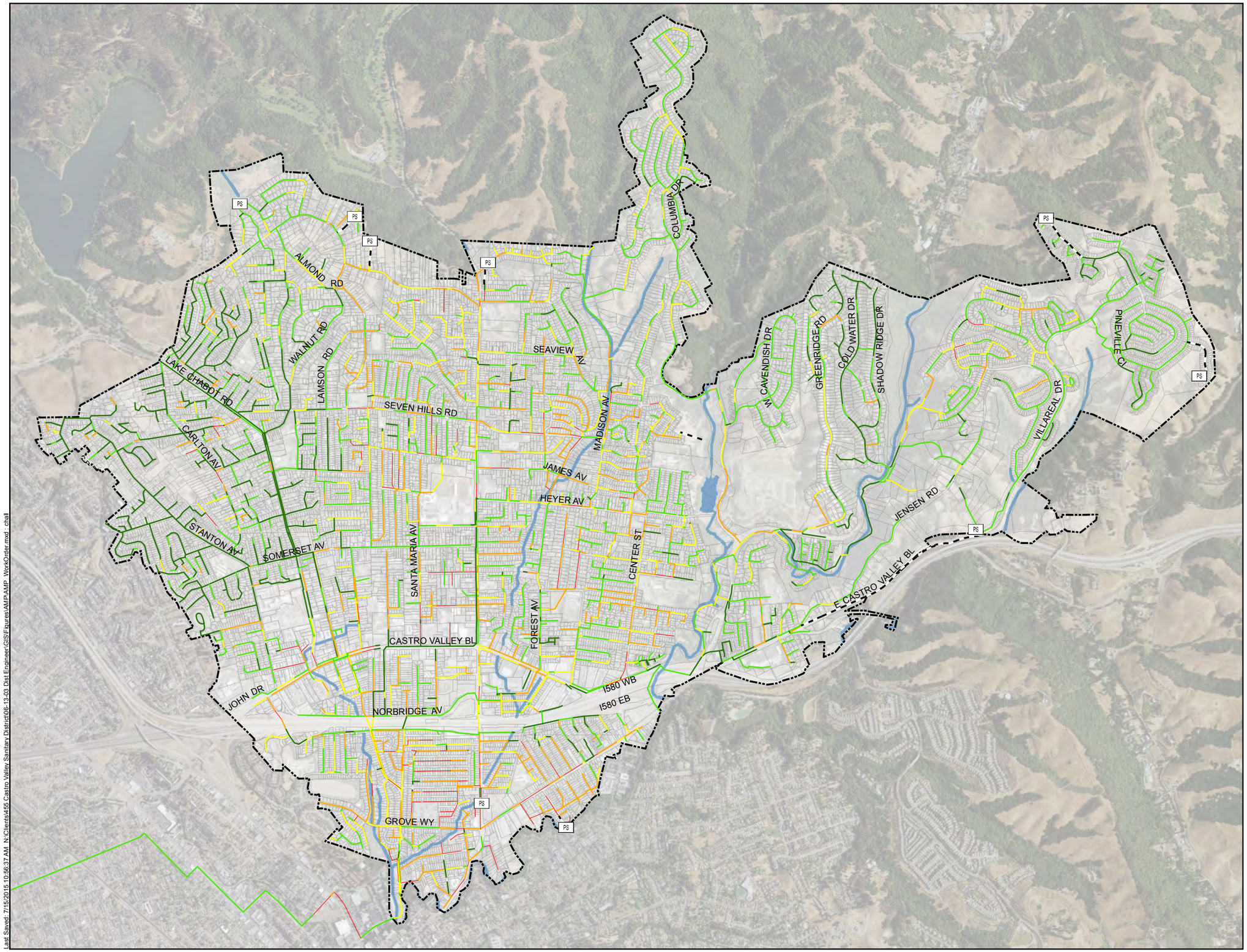

N

0 1,500 3,000

Scale in Feet

Symbology

- District Boundary
- PumpStations
- Force Main

Gravity Main - Number of Work Orders

- ≤ 1
- Between 2 - 3
- Between 4 - 6
- Between 7 - 14
- ≥ 15

CVSan

WEST YOST ASSOCIATES

Figure 4

Likelihood of Failure Work Order History

Castro Valley Sanitary District
Asset Management Plan

Last Saved: 7/15/2015 10:56:37 AM N:\Clients\455 Castro Valley Sanitary District\06-13-03 Dist Engineer\GIS\Figures\AM\PAMP WorkOrder.mxd : chall

(THIS PAGE LEFT BLANK INTENTIONALLY)

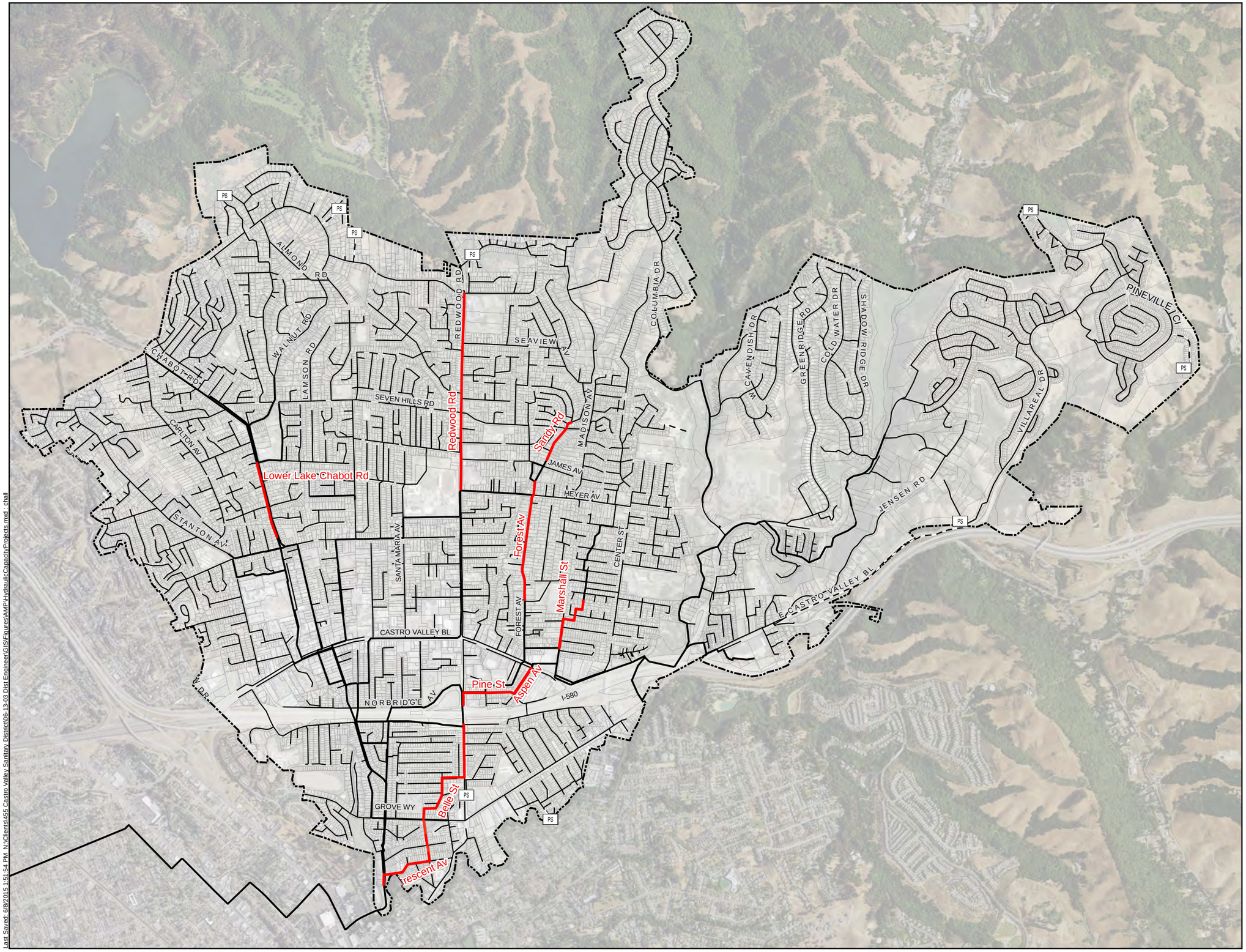

N

0 1,500 3,000

Scale in Feet

Symbology

- District Boundary
- PumpStations
- Force Main
- Sanitary Sewer Trunk Line
- Sanitary Sewer Main
- Hydraulic Capacity Improvement Project

CVSan

WEST YOST ASSOCIATES

Figure 5

Likelihood of Failure
Hydraulic Capacity Deficiency

Castro Valley Sanitary District
Asset Management Plan

Last Saved: 6/8/2015 1:51:54 PM N:\Clients\455 Castro Valley Sanitary District\06-13-03 Dist Engineer\GIS\Figures\AMP\HydraulicCapacityProjects.mxd - chall

(THIS PAGE LEFT BLANK INTENTIONALLY)

Table 3. Likelihood of Failure Rating Factors

Category	Factor	Rating (1 being the lowest, 5 being the highest)					Rating (R) Logic
		1	2	3	4	5	
Structural Failure							
Cracking/ Breaking	CVSan Pipe Defect Rating	<1300	Between 1300-2100	Between 2100-3200	Between 3200-4100	≥4100	Defect Rating, if available. Otherwise, Installation Year
	Installation Year	Post-1985	Between 1975-1985	Between 1965-1975	Between 1955-1965	Pre-1955	
Maintenance Blockages							
Roots/ Grease/ Debris	# of Work Orders	≤1	Between 2-3	Between 4-6	Between 7-14	≥15	Single Rating
Capacity-Related Failure							
Inadequate Hydraulic Capacity	Hydraulic Deficiency	No	-	-	-	Yes	Single Rating

Once rated for each factor, the model is applied to each pipe segment to produce a single rating (R) for each category on a scale of one to five, with five being the highest possible score. This rating is determined according to the Rating Logic shown in Table 3. Finally, the model calculates the total of the three scores for each category as the single Likelihood of Failure rating with three and 15 being the lowest and highest possible ratings, respectively.

5.2 Consequence of Failure Analysis

The consequence of failure is based on the potential impacts from an SSO in each segment of the collection system.

5.2.1 Consequence Criteria

The consequence of failure analysis is divided into three categories:

1. Environmental/ Public Health
2. Community Disruption
3. Emergency Response Cost

For each category, one or more factors are considered in determining the potential consequence of a failure, as discussed below.

Environmental/Public Health. SSOs are prohibited by state and federal environmental laws because of their potential adverse impacts on the environment and public health. The

environmental and public health consequence of failure analysis is based on three factors: 1) potential SSO volume, 2) proximity to waterways, and 3) proximity to public facilities:

1. Large-volume SSOs have greater potential to adversely impact the environment and public health. The potential SSO volume was estimated from the diameter of the pipe using asset registry data stored in Lucity™. The results are shown on Figure 6.
2. Wastewater that contaminates waterways poses a direct impact to the environment. Using GIS, an intersection of gravity mains with creeks, channels, and culverts identified pipes located in close proximity to waterways, as shown on Figure 7.
3. Human exposure to a wastewater spill poses a public health risk, and the potential for human exposure increases in public facilities such parks and schools. The proximity of gravity mains to public facilities was estimated using GIS data, as shown on Figure 8. The consequence of failure increases as the proximity to public facilities decreases.

Community Disruption. SSOs impact the community while emergency repairs are being made. Beyond any direct impact associated with sewer service interruption, the principal impact is traffic disruption. Using GIS, the following facilities were used to identify heightened traffic consequences associated with repairs to pipelines and associated manholes: gravity mains along arterial streets, crossing highways or freeways or located in access ramps, and along or immediately adjacent to hospital or school driveways. The results are shown on Figure 9.

Emergency Response Impacts. Emergency response and repair costs can increase substantially when the gravity main is inaccessible to bypass pumping and repair equipment. CVSan maintains a record of site access constraints in the Lucity™ CMMS. Some of these factors, such as site constraints related to traffic, are accounted for in the risk analysis through the previously-described evaluation categories, so they were not used in the analysis of emergency response impacts. Easements and other areas with poor access (see Figure 10) were included. (Note: this factor only includes easements which are recorded in Lucity™ as being difficult to access.)

5.2.2 Consequence Criteria Rating Methodology

Each pipe segment is rated by the model for each consequence of failure factor on a scale of one to five with five indicating the highest adverse consequence of failure. The methodology for rating each pipeline segment is summarized in in Table 4.

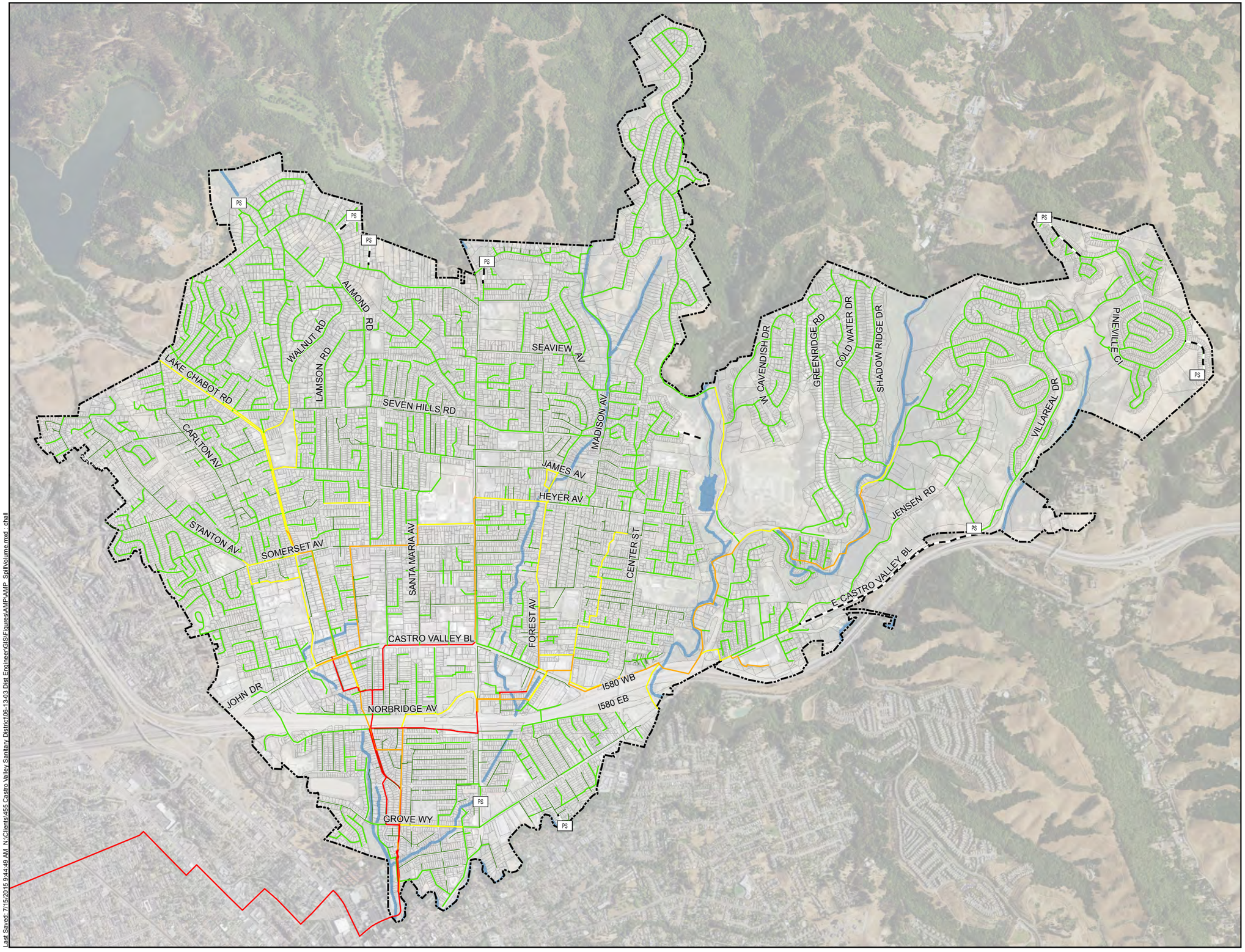

N

0 1,500 3,000

Scale in Feet

Symbology

- District Boundary
- PumpStations
- Force Main

Gravity Main - Diameter

- ≤ 6-inches
- 8-inches
- 10 to 12-inches
- 14 - 21-iches
- ≥ 24-inches

CVSan

WEST YOST ASSOCIATES

Figure 6

Consequence of Failure Potential Spill Volume

Castro Valley Sanitary District
Asset Management Plan

Last Saved: 7/15/2015 9:44:49 AM N:\Clients\455 Castro Valley Sanitary District\06-13-03 Dist Engineer\GIS\Figures\AMP\AMP_SpillVolume.mxd , chall

(THIS PAGE LEFT BLANK INTENTIONALLY)

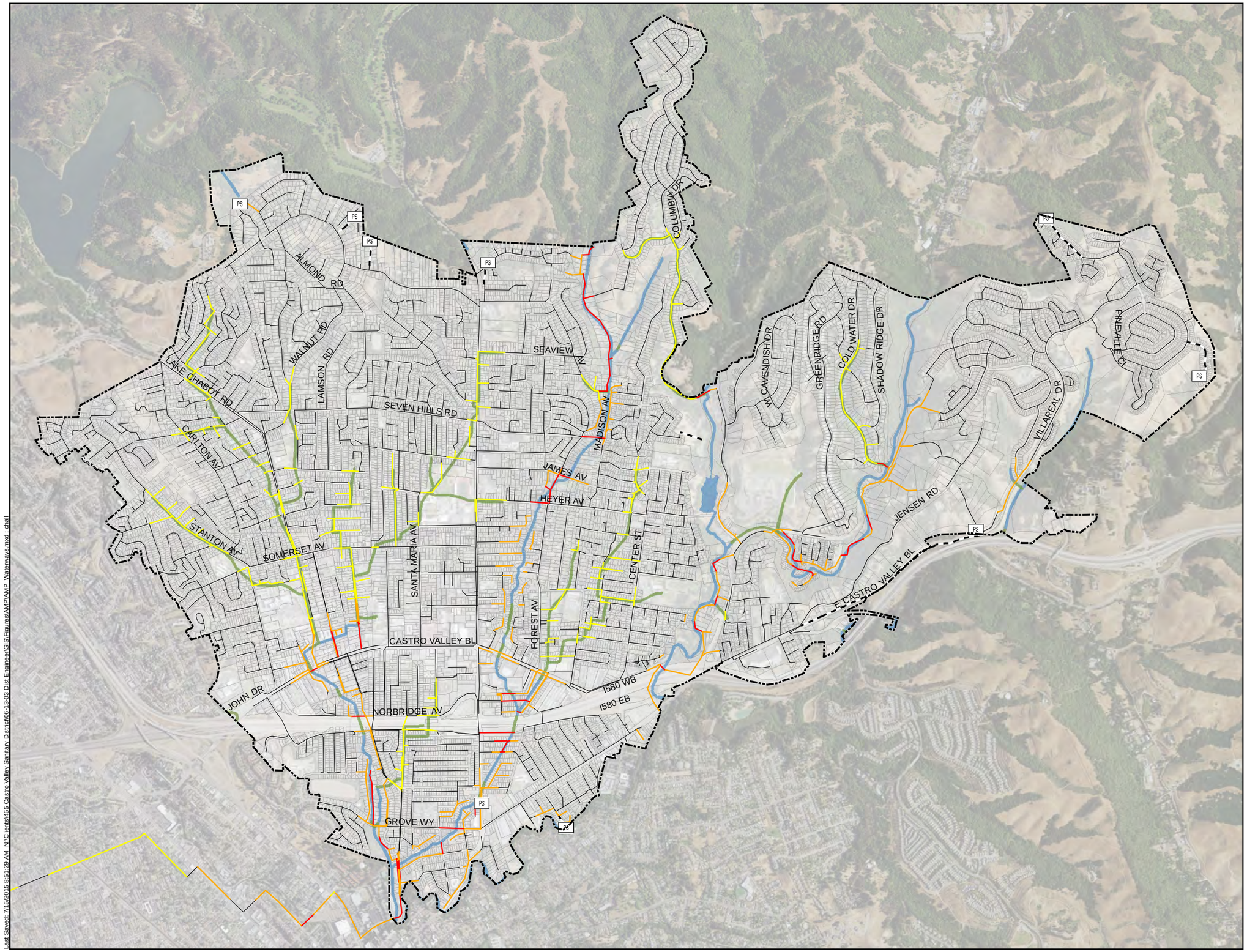

N

0 1,500 3,000

Scale in Feet

Symbology

- District Boundary
- PumpStations
- Force Main

Gravity Main - Proximity to Waterways

- Creek or Channel Crossing
- Within 150' of Creek or Channel
- Culvert Crossing
- Other

Waterways

- Creek or Channel
- Culvert

CVSan

WEST YOST ASSOCIATES

Figure 7

Consequence of Failure Environmental Impacts

Castro Valley Sanitary District
Asset Management Plan

Last Saved: 7/15/2015 8:51:29 AM N:\Clients\455 Castro Valley Sanitary District\06-13-03 Dist Engineer\GIS\Figures\AMP\AMP_Waterways.mxd - chall

(THIS PAGE LEFT BLANK INTENTIONALLY)

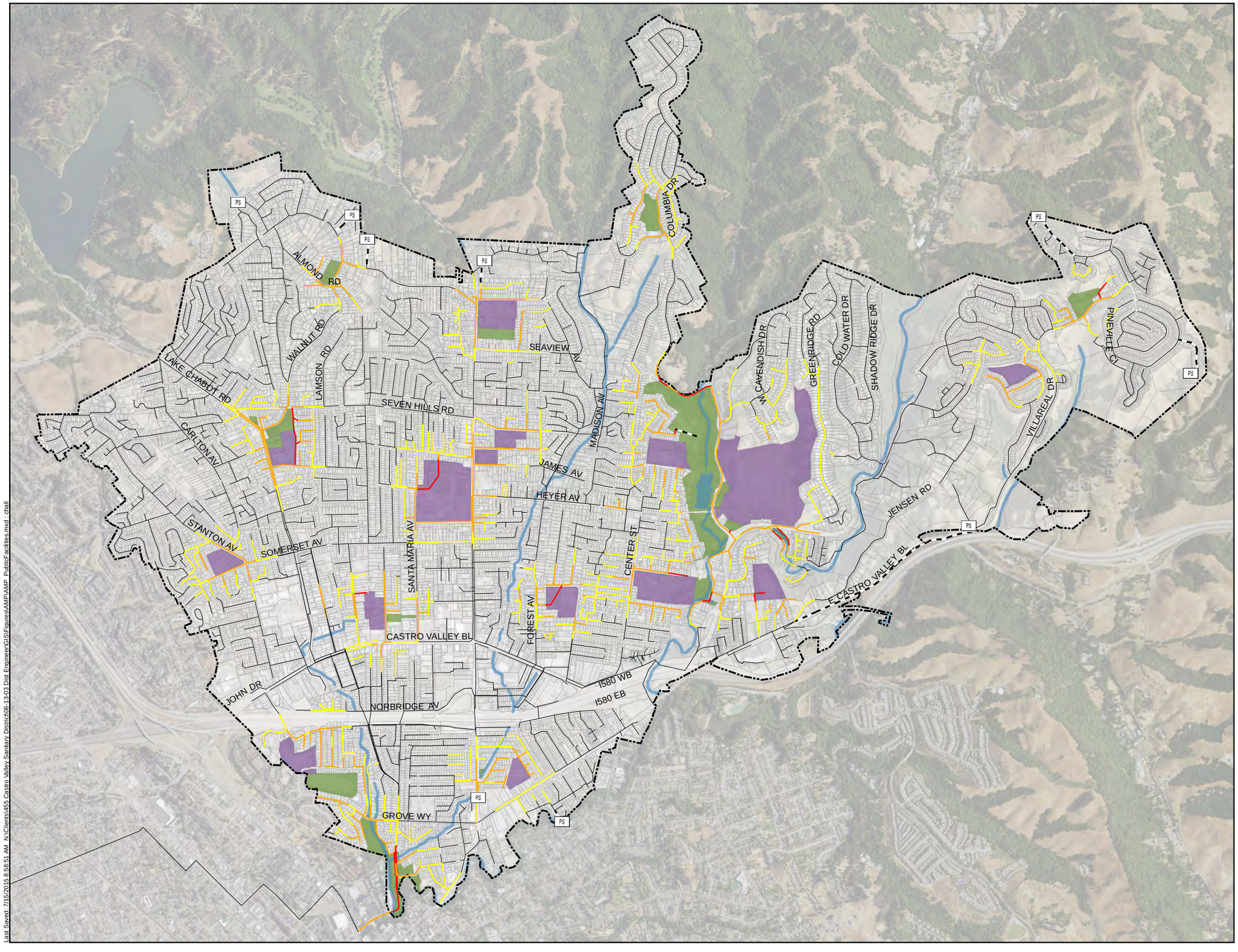

N

0 1,500 3,000

Scale in Feet

Symbology

- District Boundary
- PumpStations
- Force Main

Gravity Main - Proximity to Public Facilities

- Within/Intersecting Facility
- Within 150' of Facility
- Within 500' of Facility
- Other

Public Facilities

- School
- Park

CVSan

WEST YOST ASSOCIATES

Figure 8

Consequence of Failure
Public Health Impacts

Castro Valley Sanitary District
Asset Management Plan

Last Saved: 7/15/2015 8:58:51 AM N:\Clients\455 Castro Valley Sanitary District\06-13-03 Dist Engineer\GIS\Figures\AMP\AMP_PublicFacilities.mxd , dhall

(THIS PAGE LEFT BLANK INTENTIONALLY)

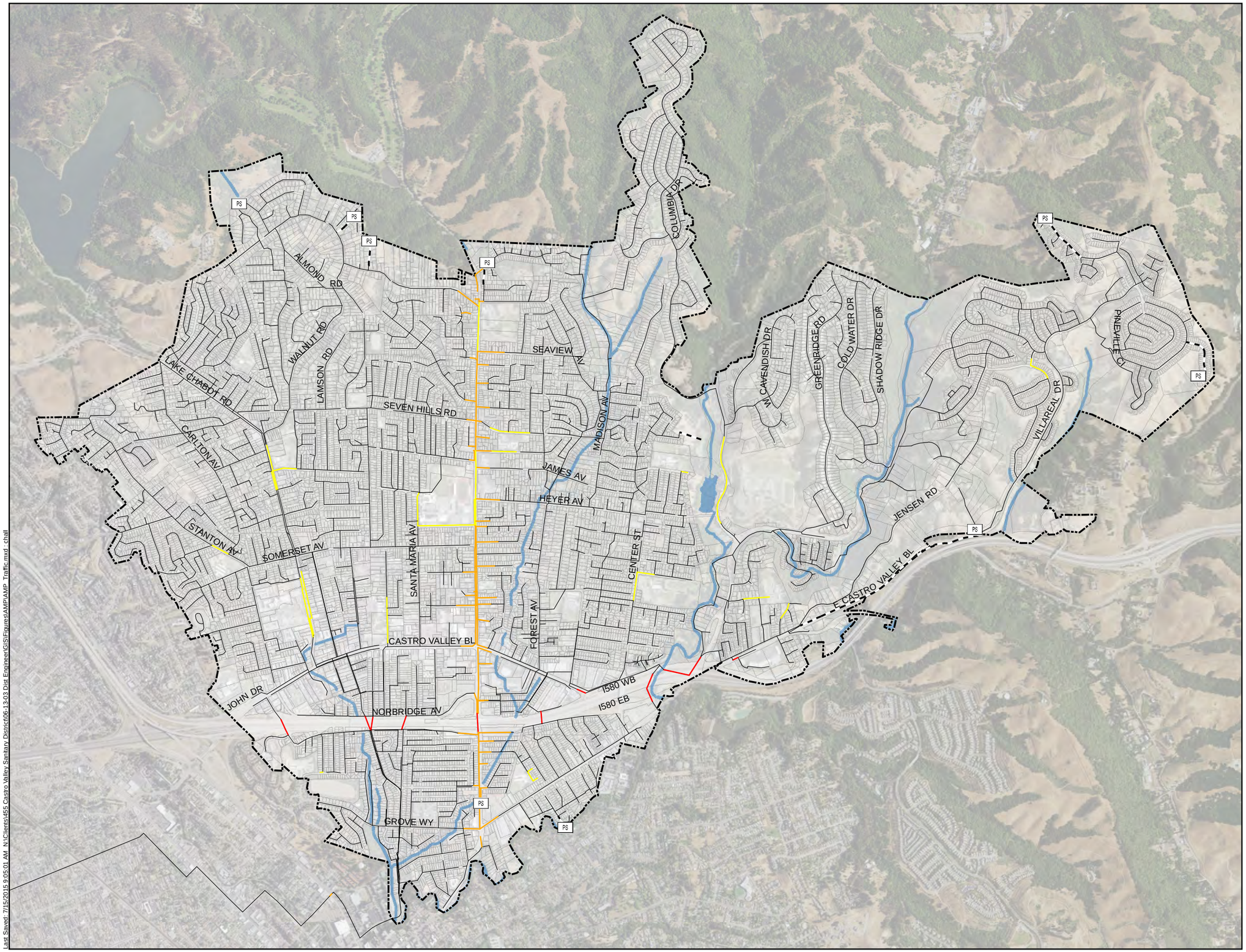

N

0 1,500 3,000

Scale in Feet

Symbology

- District Boundary
- PumpStations
- Force Main

Gravity Main - Traffic Impacts

- Freeway/Highway Ramp
- Arterial Street
- Hospital/School Driveway
- Other

Figure 9

Consequence of Failure Traffic Impacts

Castro Valley Sanitary District
Asset Management Plan

Last Saved: 7/15/2015 9:05:01 AM N:\Clients\455 Castro Valley Sanitary District\06-13-03 Dist Engineer\GIS\Figures\AMP\AMP_Traffic.mxd - chall

(THIS PAGE LEFT BLANK INTENTIONALLY)

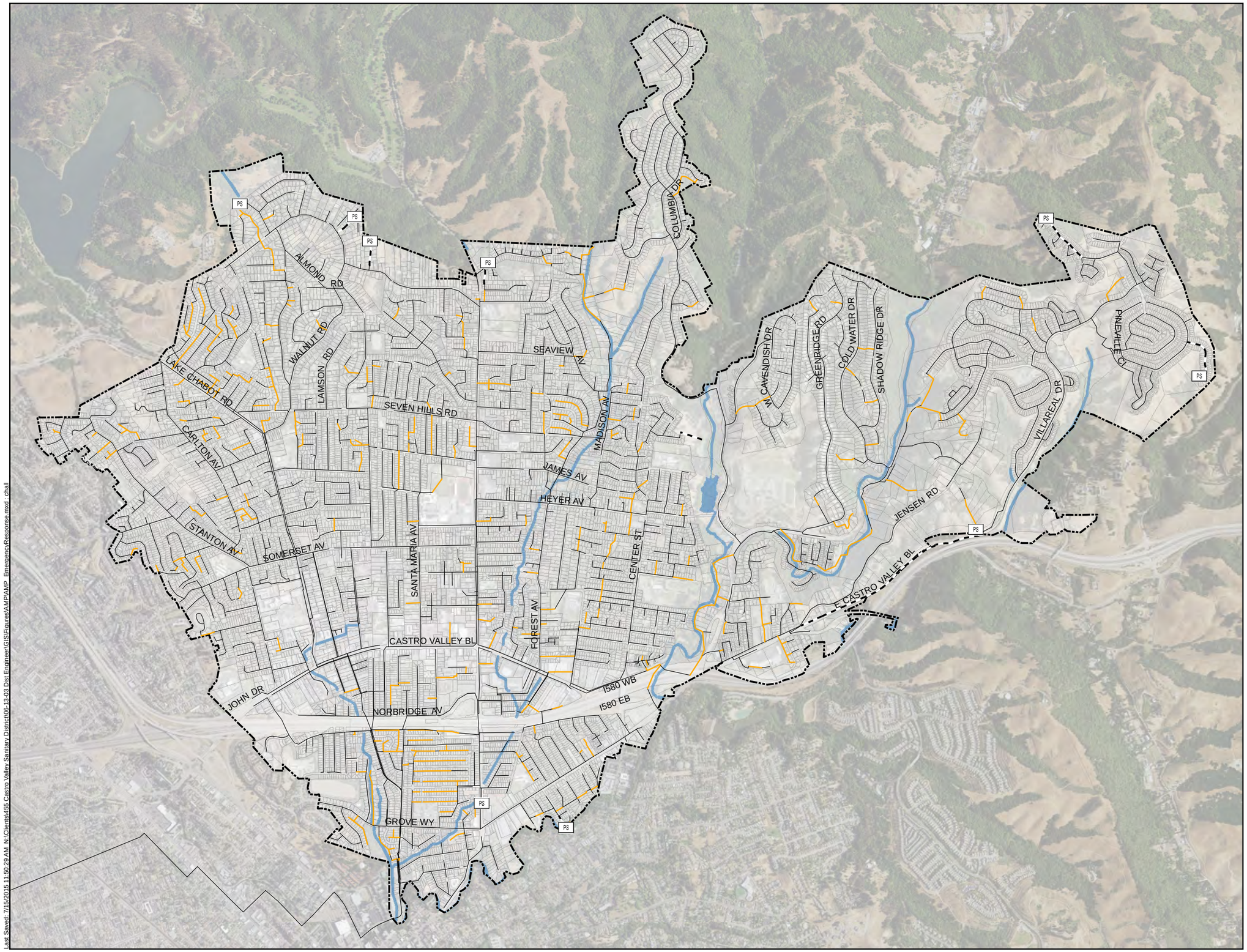

N

0 1,500 3,000

Scale in Feet

Symbology

- District Boundary
- PumpStations
- Force Main

Gravity Main - Access Constraints

- Poor Access
- Other

Figure 10

Consequence of Failure
Emergency Response Impacts

Castro Valley Sanitary District
Asset Management Plan

Last Saved: 7/15/2015 11:50:29 AM N:\Clients\455 Castro Valley Sanitary District\06-13-03 Dist Engineer\GIS\Figures\AMP\AMP_EmergencyResponse.mxd chall

(THIS PAGE LEFT BLANK INTENTIONALLY)

Table 4. Consequence of Failure Rating Factors

Category	Factor	Rating (1 being the lowest, 5 being the highest)					Rating (R) Logic
		1	2	3	4	5	
Environmental/Public Health							
Potential Volume of Spill	Diameter	≤ 6-inches	8-inches	10 to 12-inches	14 to 21-inches	≥ 24-inches	Assigned the highest rating of all factors
Environmentally Sensitive Areas	Proximity to Waterways	Other	-	Culvert Crossing	Within 150' of Creek or Channel	Creek or Channel Crossing	
Public Exposure	Proximity to Public Facilities	Other	-	Within 500'	Adjacent/ Within 150'	Within/ Intersecting	
Community Disruption							
Traffic Impacts	Pipeline Crossings	Other	-	Hospital/ School Driveway	Arterial Street	Freeway/ Highway Ramp	Single Rating
Emergency Response Impact							
Response Time	Access Constraints	Other	-	-	Poor Access	-	Single Rating

The model is applied to each pipe segment to produce a single rating (R) for each category on a scale of one to five, with five being the highest possible score. This rating is determined according to the Rating Logic shown in Table 4. Finally, the model calculates the aggregate of the three scores for each category as the single Consequence of Failure rating with three and 14 being the lowest and highest possible ratings, respectively.

5.3 Risk Assessment Results

The model applies a series of algorithms to generate the total likelihood and consequence of failure scores for each asset, as described above. In Table 5, the scores are divided into five ranges (A through E) for both the likelihood and consequence of failure with E being the highest risk level. By plotting the consequence of failure and the likelihood of failure scores against each other, an overall risk level was assigned to each segment. Risk was prioritized into three levels: High Risk, Medium Risk, and Low Risk, as shown in Table 5 (which shows the total number of pipes out of a total of 3,605 that fall into each range).

Table 5. Risk Assessment Results

Number of Pipes		Likelihood of Failure					
		A	B	C	D	E	Total
Consequence of Failure	A	47	35	84	79	76	321
	B	526	189	281	164	47	1,207
	C	213	88	182	133	60	676
	D	242	126	257	238	174	1,037
	E	80	38	100	81	65	364
	Total	1,108	476	904	695	422	3,605

Risk Level: Low Risk Medium Risk High Risk

The collection system contains approximately 40-percent low risk pipes, 37-percent medium risk, and 23-percent high risk. The risk level for each individual pipe segment is shown on Figure 11.

6.0 REHAB/REPLACEMENT PROGRAM

This section describes the rehab/replacement program development methodology, cost estimates, and FY 2014/15 sewer rehab/replacement project scope.

6.1 Rehab/Replacement Methodology

Once the gravity sewers with CCTV inspections were assigned a risk level, the model assigned a preliminary rehab/replacement action based on the decision tree shown on Figure 12 – highlighted in the "Automated Algorithm" box.

In 2014, in order to develop the scope for the 2014/15 Gravity Sewer Rehab/Replacement Project, this algorithm was only applied to the 841 high risk pipes in the CVSan system because it was known by CVSan staff that there were more repair needs than there was budget available. Applying the decision tree in Figure 12 to the 841 high risk pipes resulted in preliminary recommendations to potentially replace 427 pipes and rehabilitate (e.g. spot repair) 38 pipes.

To determine which of 427 high risk pipes identified for replacement were most critical, West Yost performed an engineering review of the inspection videos:

1. The CCTV review process began with CVSan staff identifying which video included the best information about each of the high risk pipes.

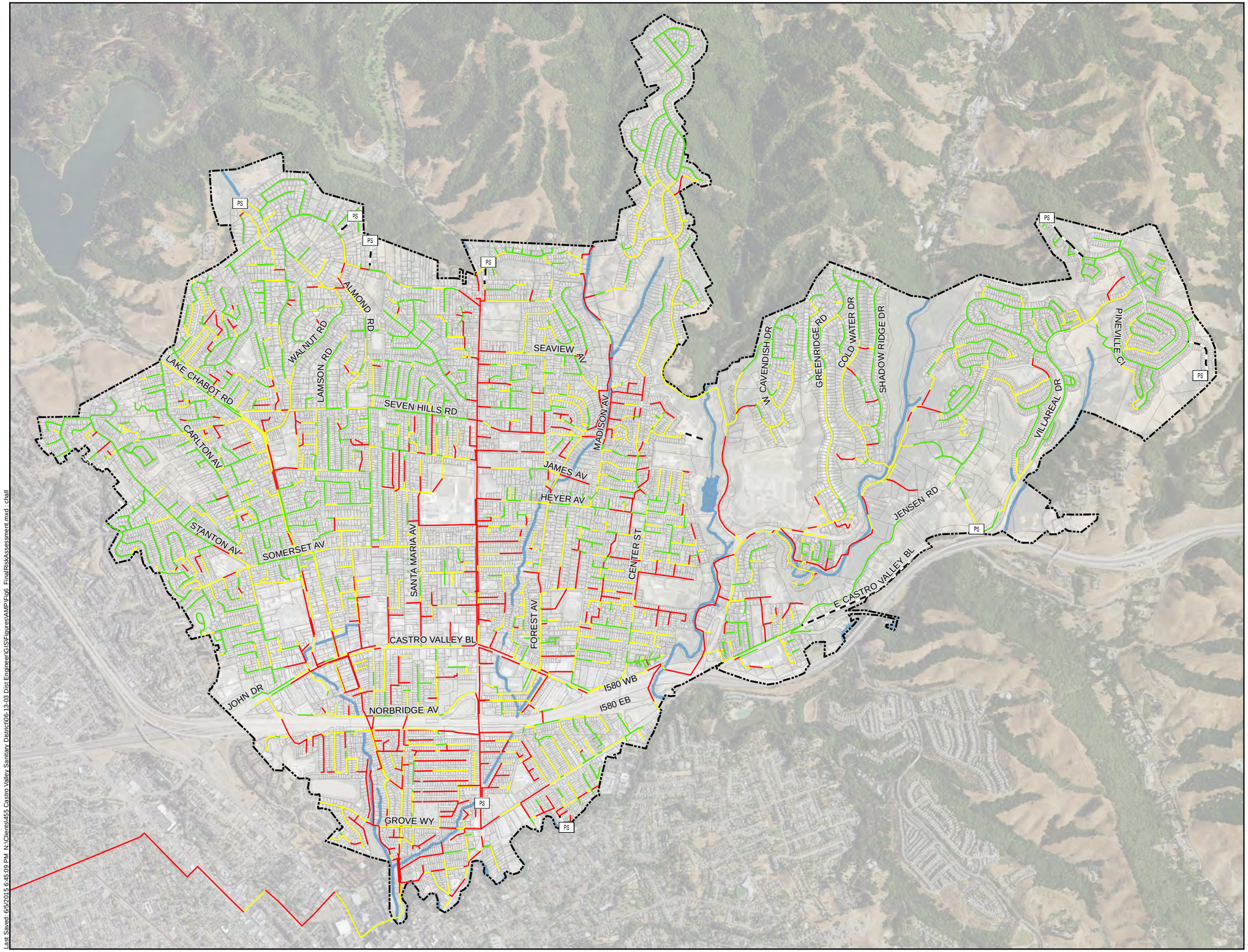

N

0 1,500 3,000

Scale in Feet

Symbology

- District Boundary
- PumpStations
- Force Main

Gravity Main - Risk Factor

- High
- Med
- Low

Figure 11

Risk Assessment Results

Castro Valley Sanitary District
Asset Management Plan

Last Saved: 6/5/2016 6:45:09 PM N:\Clients\455 Castro Valley Sanitary District\06-13-03 Dist Engineer\GIS\Figures\AMP\Fig6_FinalRiskAssessment.mxd chall

(THIS PAGE LEFT BLANK INTENTIONALLY)

Figure 12. Preliminary Rehab/Replacement Decision Tree

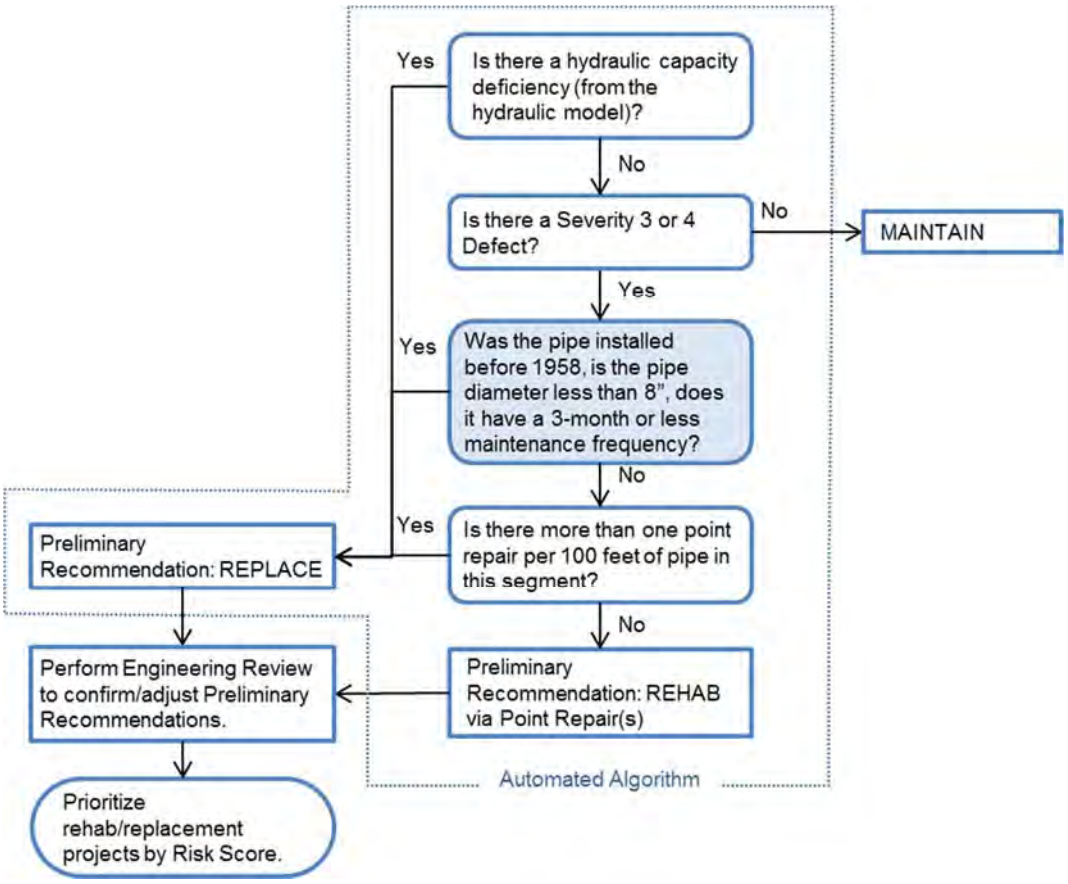

2. Then, West Yost reviewed each of the videos to validate the defect coding of the high-scoring defects. During the review, pipes were flagged if they had particularly severe defects such as deformation or large breaks at the crown of the pipe, or if the defects were coded incorrectly or are otherwise less severe than indicated and should not be prioritized for repair. The review process also included a review of the types of defects and the proximity of defects to one another to determine the best possible rehab or replacement method. For example, if multiple level-4 defects are located in close proximity to each other, a spot repair may be the best method. However, if the defects are spread over the length of the pipe, a full pipe replacement may be a more cost-effective approach. As a result of the engineering review, the original 465 pipes preliminarily identified for rehab or replacement were pared down to 202 pipes.
3. These 202 pipes were then sorted by urgency and risk level, and preliminary construction costs were calculated to create a short-list of the repairs and improvements that could be made within the budget constraints of the next fiscal year.
4. Then a final review was conducted of the short list of the highest priority pipes in order to refine the final scope of the FY 2014/15 Gravity Sewer Rehab/Replacement Project. This final review considered easement status, constructability, and additional factors such as the number of properties served.

6.2 FY 2014/15 Gravity Sewer Rehab/Replacement Project

In February 2015, West Yost developed the planning-level unit costs shown in Table 6 for the common rehab/replacement methods employed by CVSan. These planning-level costs were used to scope the 2014/15 Gravity Sewer Rehab/Replacement Project.

Table 6. Planning-Level Unit Costs

Construction Method	Unit Cost
Spot Repair (Open Cut)	$2,400/inch diameter
Open Cut Replacement	$60/inch diameter-foot
Pipebursting Replacement	$36/inch diameter-foot

A construction budget of $1.1 million dollars was allocated for the 2014/15 Gravity Sewer Rehab/Replacement Project (to be constructed in FY 2015/16). This budget was used to determine how many of the pipes would be feasible to include in the scope of this next construction project. The budget allowed for 24 gravity sewers to receive improvement, which included 20 spot repairs, 2,452 linear feet of pipebursting replacement, and 126 linear feet of open cut replacement. See Appendix B for details on the scope of the FY 2014/15 Gravity Sewer Rehab/Replacement Project.

7.0 PREVENTATIVE MAINTENANCE PROGRAM

CVSan maintains a 5-year cleaning cycle with 3-, 6-, 12-, and 24-month high frequency cleaning schedules with hydrojet, root cutter, and machine rodding processes. The maintenance department has plans to reinstate a program of conducting CCTV-inspections of assets post-cleaning for quality control of cleaning procedures. Preventative maintenance schedules are currently being set as defects are found or blockages occur. There remains an opportunity to optimize maintenance schedules using the newly-available results of the risk assessment. This optimization is currently scheduled to be performed in the fall of 2015 to meet SSMP update action plan deadlines.

8.0 NEXT STEPS: PROGRAM IMPROVEMENTS FOR FY 2015/16

CVSan should build upon the risk-based approach developed in FY 2014/15 to prioritize improvements to the collection system. Specifically, the actions in Table 7 have been identified for improvement to the AMP for FY 2015/16.

Table 7. Program Improvements for FY 2015/16

Recommended Improvement	Benefits to CVSan
Condition Assessment	
Implement a regular QA/QC process for reviewing CCTV inspection data as it gets uploaded to the network.	Regular QA/QC checks of PACP defect codes helps correct miscoded defects, provides ongoing training for engineering and maintenance staff, and improves the quality of the CCTV data collected in the future.
Conduct CCTV inspections for sewer lines with no CCTV data currently available.	Filling the CCTV data gap will give CVSan a more complete 10-year forecast of necessary improvements and a more robust 10-year CIP.
Improve CCTV review and analysis by using software tools such as Innovyze's InfoMaster Sewer (InfoMaster) asset management software.	Software tools such as InfoMaster will allow West Yost to: 1) review CCTV video records from West Yost offices, 2) correct miscoded CCTV codes - which improves the risk score accuracy, 3) analyze multiple CCTV inspections for a single pipe faster, 4) log Engineer Review notes/results in one place, and 5) export GIS layers of defects and lateral connection locations.
Risk Assessment	
Rather than using the pipe diameter, populate a field with flowrates from the CVSan hydraulic model for trunk sewers and the upstream parcel count for local sewers.	Improves the risk assessment input information by improving the spill volume potential estimate.
Conduct a workshop with maintenance crews to validate Emergency Response Impacts and Maintenance Blockage risk factor input data.	Improves the accuracy of the risk assessment input, thereby improving the output.

Table 7. Program Improvements for FY 2015/16

Recommended Improvement	Benefits to CVSan
Rehab/Replacement Program	
Rectify the conflicting easement status information (whether CVSan has ownership records, the easement is recorded on a plat map, the easement is noted in a data field in Lucity™, etc.) and close the data gaps related to unknown easement status.	Rectifying and filling these data gaps allows CVSan to use the easement status as a consideration when scheduling repairs. It will also allow CVSan to establish and prioritize an easement acquisition program.
Improve Rehab/Replacement Model by improving the decision flow chart to refine and recalibrate rehab/replacement decisions and to include rehab method selection as a programmatic decision.	Improves the documentation of engineering review decisions, and quickly traces rehab/replacement decisions through the decision tree for each individual pipe.
Expand the scope of the Rehab/Replacement Model to develop a long-term proactive replacement program (assuming a replacement cycle of approximately 75 years, for instance, would yield a replacement program with an average of two miles of gravity sewers replaced per year).	A proactive replacement program allows CVSan to programmatically renew the system as assets reach the end of their useful lives.
Develop 10-Year Capital Improvement Plan.	Improves CVSan's management of expected project costs and develops a long-term CIP.
Preventative Maintenance Program	
Optimize the preventative maintenance program using the risk assessment results: • Review condition assessment data for low risk, high maintenance frequency assets. • Confirm the adequacy of routine maintenance for high risk assets.	Optimizes maintenance department efforts.
Gravity Sewer Asset Management Program	
Populate rehabilitation/replacement projects in the Lucity™ CMMS database as a project consisting of a batch of asset ID's, or at a minimum as project name and date fields in the pipe asset module.	Improves CVSan records of asset improvements.
Continually review and improve this Gravity Sewer AMP.	Improved efficiency over time.

Following the implementation of this Gravity Sewer AMP, CVSan should begin the development of Asset Management Plans for manhole, force main, and pump station assets.

APPENDIX A

CCTV Defect Code List

(THIS PAGE LEFT BLANK INTENTIONALLY)

Appendix A. CVSan Defect Scoring

Defect Category	PACP Code	Defect Sub-Category	CVSan Ranking
Structural Categories			
CRACK (C)	CL	Longitudinal	1
	CC	Circumferential	2
	CM	Multiple	4
	CS	Spiral	4
	CH2	Longitudinal Hinge 2	2
	CH3	Longitudinal Hinge 3	3
	CH4	Longitudinal Hinge 4	3
FRACTURE (F)	FL	Longitudinal	3
	FC	Circumferential	3
	FM	Multiple	4
	FS	Spiral	4
	FH2	Fracture Hinge 2	3
	FH3	Fracture Hinge 3	3
	FH4	Fracture Hinge 4	3
BROKEN (B)	BSV	Soil Visible Beyond Defect	4
	BV V	Void Visible Beyond Defect	4
HOLE (H)	HSV	Soil Visible Beyond Defect	4
	HV V	Void Visible Beyond Defect	4
COLLAPSE (X)	XP	Pipe Collapse	4
	XB	Brick Collapse	0
JOINT (J)	JO	Joint Offset - Med	3
	JO	Joint Offset - Large	4
	JS	Joint Separated - Med	3
	JS	Joint Separated - Large	4
	JA	Joint Angular-Med	3
	JA	Joint Angular-Large	4
POINT REPAIR (RP)	RPR	Pipe Replaced	0
	RPR-D	Pipe Defective	0
	RPP	Patch Repair	0
	RPP-D	Patch Defective	0
	RPL	Localized Pipeliner	1
	RPL-D	Pipeliner Defective	0
	RPZ	Other	0
	RPZ-D	Other Defective	0

Appendix A. CVSan Defect Scoring

Defect Category	PACP Code	Defect Sub-Category	CVSan Ranking
Operational and Maintenance Categories			
DEPOSITS (D)	DA	Deposits Attached	2
	DAE	Ecrustation	2
	DAGS	Grease	3
	DAR	Ragging	3
	DAZ	Other	3
	DS	Deposits Settled	2
	DSF	Fine	3
	DSGV	Gravel	4
	DSC	Hard/Compacted	4
	DSZ	Other	3
	DN	Deposits Ingressed	3
	DNF	Fine (silt & sand)	3
	DNGV	Gravel	4
	DNZ	Other	3
ROOTS (R)	RF	Roots (Fine)	2
	RFB	Barrel	2
	RFL	Lateral	2
	RFC	Connection	2
	RT	Roots Tap	4
	RTB	Barrel	4
	RTL	Lateral	4
	RTC	Connection	4
	RM	Roots Medium	3
	RMB	Barrel	3
	RML	Lateral	3
	RMC	Connection	3
	RB	Roots Ball	3
	RBB	Barrel	3
	RBL	Lateral	3
	RBC	Connection	3
INFILTRATION (I)	IS	Stain	3
	IW	Weeper	3
	ID	Dripper	4
	IR	Runner	4
	IG	Gusher	4

Appendix A. CVSan Defect Scoring

Defect Category	PACP Code	Defect Sub-Category	CVSan Ranking
OBSTACLES / OBSTRUCTIONS (OB)	OBB	Brick or Masonry	4
	OBM	Pipe Material in Invert	4
	OBI	Object protruding through wall	4
	OBJ	Object wedged in joint	4
	OBC	Object through connection/junction	4
	OBP	External Pipe Cable	4
	OBS	Built into structure	4
	OBN	Construction Debris	4
	OBR	Rocks	4
	OBZ	Other	4
Construction Features			
TAP (T)	TF	Factory Made	1
	TFI	Intruding	3
	TFA	Active	1
	TFC	Capped	1
	TFB	Abandoned	1
	TFD	Defective	3
	TB	Break In / Hammer	1
	TBI	Intruding	3
	TBA	Active	2
	TBC	Capped	2
	TBB	Abandoned	2
	TBD	Defective	3
	TS	Saddled	1
	TSI	Intruding	3
	TSA	Active	1
	TSC	Capped	1
	TSB	Abandoned	1
	TSD	Defective	3
	TR	Rehabilitated	1
	TRI	Intruding	3
	TRA	Active	1
	TRC	Capped	1
	TRB	Abandoned	1
	TRD	Defective	3

Appendix A. CVSan Defect Scoring

Defect Category	PACP Code	Defect Sub-Category	CVSan Ranking
Miscellaneous Features			
Miscellaneous Features (M)	MCU	Camera Underwater	3
	MGO	General Observation	0
	MGP	General Photograph	0
	MSC	Shape/Size Change	3
	MJL	Joint Length Change	0
	MLC	Lining Change	0
	MMC	Material Change	0
	MSA	Survey/Abandoned	4
	MWL	Water Level	2
	MWLS	Water level Sag	3
	MWM	Watermark	2
	MY	Dye Test	0
	MYV	Dye Test (visible)	0
	MYN	Dye Test (not visible)	0
	TF	Tap - Factory Made	0
	TFB	Tap - Factory Made Abandoned	1
	TFA	Tap - Factory Made Active	0
	TFC	Tap - Factory Made Capped	0
	TFD	Tap - Factory Made Defective	3
	TFI	Tap - Factory Made Intruding	3
	TR	Tap - Rehabilitated	0
	TRB	Tap - Rehabilitated Abandoned	0
	TRA	Tap - Rehabilitated Active	0
	TRC	Tap - Rehabilitated Capped	0
	TRD	Tap - Rehabilitated Defective	3
	TRI	Tap - Rehabilitated Intruding	3
	TS	Tap - Saddled	0
	TSB	Tap - Saddled Abandoned	0
	TSA	Tap - Saddled Active	0
	TSC	Tap - Saddled Capped	0
	TSD	Tap - Saddled Defective	3
	TSI	Tap - Saddled Intruding	3
	ATC	Tee Connection	0
	MWL	Water Level	0
	MWLS	Water level Sag	3
	MWM	Watermark	1
	AWW	Wet Well	0

APPENDIX B

FY 2014/15 Gravity Sewer Rehab/Replacement Project

(THIS PAGE LEFT BLANK INTENTIONALLY)

CVSan 2014/15 Gravity Sewer Rehab/Replacement Project Scope

Cost Estimate Assumptions		
Repair Type	**Unit Cost**	**Unit**
Spot Repair	$2,400	$/inch diam
Open Cut	$60	$/inch diam-ft
Pipe Burst	$36	$/inch diam-ft

West Yost Database Fields					2014/15 Project Scope			Cost Estimate				
FacilityID	**Diameter**	**Length**	**CVSan Maint Dept Defect List Issue**	**Easement Issues**	**2014/15 R/R Project**	**Final Recommendation Notes**	**Follow-up Action Required**	**Final Method**	**Final No. of Spot Repairs**	**Spot Repair Location**	**Cost**	**Cumulative Cost**
11-52_12-109	6	284	Hole in pipe at 230' and 276' D/S from MH11-52.	Easement shown on tract map.	YES	Upsize to 8".		PB	0	-	$81,737	$81,737
11-77_11-75	8	127	Hole in pipe at 38' from U/S manhole observed during TVI.	Easement shown on tract map.	YES			Spot	1	38'	$19,200	$100,937
12-63_13-5	12	676		None	YES			Spot	1	105'	$28,800	$129,737
19-55_19-56	6	454	Broken pipe observed during TVI.	Easement shown on tract map.	YES	Candidate for full line replacement because of roots, but S-curve in line segment at 419 ft (presumably around a backyard pool) makes point repairs more feasible.		Spot	2	7', 291' from DSMH	$28,800	$158,537
20-36_20-38	6	126	Pipe material appears to be bituminous fiber (BTF).	None	YES	Open cut because unknown pipe material/storm sewer crossing.		Open	0	-	$60,704	$219,242
20-92_20-13	6	121		None	YES	Sags remain since they are not severe.		Spot	1	1'	$14,400	$233,642
22-1_22-23	21	152	Severe roots and broken pipe observed during inspection. Recommend CRT maintenance and spot repair.	Needs verification	YES	Possible CIPP project because of roots.		Spot	1	147	$50,400	$284,042
22-102_23-1	8	494		None	YES	Sags, cracks, and other monor defects will not be repaired because of expensive length of pipe.		Spot	2	1', 307'	$38,400	$322,442
22-112_22-111	6	424		Easement shown on tract map.	YES	Upsize to 8". 14 lateral connections.		PB	0	-	$122,103	$444,545
22-34_22-56	15	363	Broken pipe and offset observed. Inspection equipment obstructed.	None	YES	CCTV inspection obstructed. Confirm during design.	CCTV before design	Spot	1	1-10'	$36,000	$480,545
22-75_22-74	6	166	Severe fractures observed during TVI. Recommend repplace pipeline.	No easement.	YES	Upsize to 8". Need easements. Might need to be CIPP to avoid digging lateral connections.	Need easements.	PB	0	-	$47,855	$528,400
22-81_22-82	6	422		Easement shown on tract map.	YES	Upsize to 8". 14 lateral connections.	CCTV before design	PB	0	-	$121,653	$650,052
23-20_23-42	6	332		Needs verification	YES	Upsize to 8". Easement issue is minor - only 2 or 3 properties.		PB	0	-	$95,586	$745,638
23-39_23-38	8	144		Needs verification	YES			Spot	1	16'	$19,200	$764,838
23-41_23-42	8	184	Broken pipe at 124 ft. from MH23-41.	None	YES			Spot	1	125'	$19,200	$784,038

(THIS PAGE LEFT BLANK INTENTIONALLY)

West Yost Database Fields					2014/15 Project Scope			Cost Estimate				
FacilityID	Diameter	Length	CVSan Maint Dept Defect List Issue	Easement Issues	2014/15 R/R Project	Final Recommendation Notes	Follow-up Action Required	Final Method	Final No. of Spot Repairs	Spot Repair Location	Cost	Cumulative Cost
29-22_20-41	8	321		None	YES	May be candidate for replacement. CCTV to confirm.	CCTV before design	Spot	2	0, 305	$38,400	$822,438
29-39_30-99	6	520		Have easement	YES	Only partial CCTV videos available. Assumed pipe bursting, but may reduce to spot repairs dring design after CCTV.	CCTV before design	PB	0	-	$149,732	$972,170
30-99_30-98	6	138		Needs verification	YES	Perform spot repair in the street - avoids potential easement issues.	CCTV before design	Spot	1	106'	$14,400	$986,570
34-13_28-15	6	304		None	YES	Upsize to 8".		PB	0	-	$87,661	$1,074,230
35-34R_35-35	8	222		None	YES	Root issues would warrant replacement, but spot repair chosen since it's the end of a line carying low flows.	CCTV before design	Spot	2	90', 187'	$38,400	$1,112,630
35-50_35-49	8	152		None	YES			Spot	1	128'	$19,200	$1,131,830
40-60_40-21	8	152		Easement shown on tract map.	YES	CCTV inspection incomplete. Point repair assumed, but needs confirmation during design.	CCTV before design	Spot	1	108'	$19,200	$1,151,030
5-61R_5-60	8	103	Broken pipe observed during TVI. Recommend repair.	Needs verification	YES	Can't CCTV because of defect. Needs a point repair, then CCTV.	CCTV entire pipe after point repair is done.	Spot	1	2'	$19,200	$1,170,230
8-12_8-11	8	106	Severe offset and roots at 102' from U/S manhole observed during TVI. Recommend repair.	None	YES			Spot	1	102'	$19,200	$1,189,430

(THIS PAGE LEFT BLANK INTENTIONALLY)

Last Saved: 2/4/2015 3:41:23 PM chall; W:\Clients\455 Castro Valley Sanitary District\06-13-03 Dist Engineer\GIS\Figures\AMP\Fig1_RepairandReplace2015.mxd

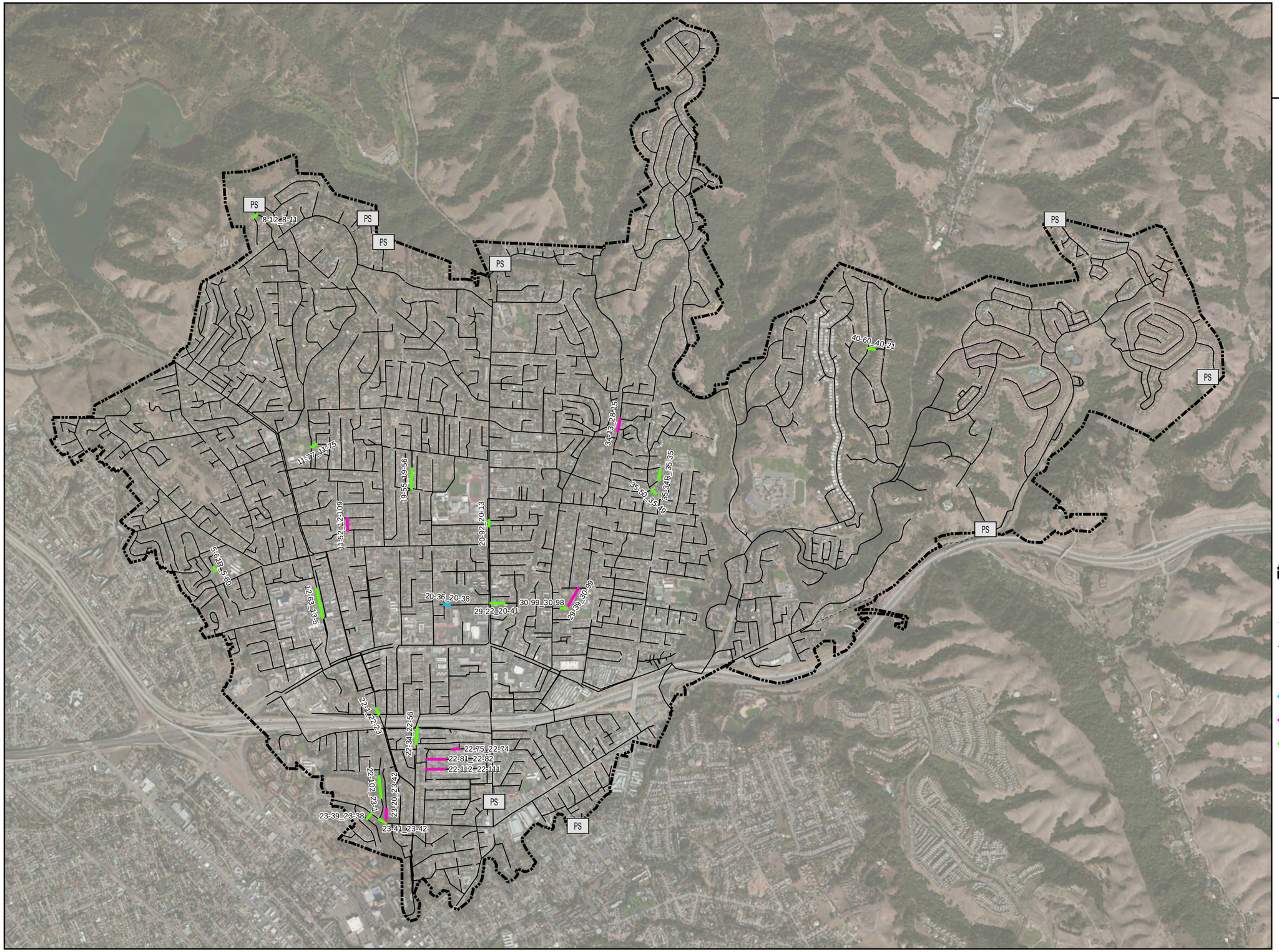

Castro Valley Sanitary District

2014/15 Rehab/Replacement Project

N

0 0.25 0.5
Miles

LEGEND

- District Boundary
- PumpStations
- Force Main
- Gravity Main

Rehab/Replacement Method

- Open Cut
- Pipe Bursting Replacement
- Spot/Point Repair

CVSan

WEST YOST ASSOCIATES

(THIS PAGE LEFT BLANK INTENTIONALLY)

Table 4

Updated Gravity Sewer Asset Management Plan Risk Scores and Supporting Information

** Lines in RED font have an updated Risk score that is greater that the 2015 GSAMP. Lines highlighted in GREY have "Highest" or "High" priority based or Structural quick rating, and were not included on a prior CIP list.

Pipe ID	VWHA Priority (For Reference Only)	2015 GSAMP Risk Score	2020 Risk Score	On 2016 CIP List	On 2016-17RR List	On CIPPriority 17-18 List	Diameter (in)	Install Date	Length (ft)	CVSan Comments
23-93_23-97		9944	9944	Yes		Yes	24	1/1/1953	206.2	DP 94 Aerial Pipeline CIPP
23-91_23-96		8588	8588	Yes		Yes	15	1/1/1944	254.6	DP 94 Aerial Pipeline CIPP
13-60_13-59		7896	7896			Yes	10	1/1/1940	200.8	EBMUD Spot Repair
T5_T6		7840	7840				36		579.2	Outside of District
23-90_23-93		7524	7524	Yes		Yes	24		51.5	Upstream of Aerial pipelines
T2_T3		7360	7360	Yes			36		1210.9	Outside of District
22-34_22-56		7350	7350	Yes			15	1/1/1950	362.6	DP 86 Spot Repair
26-14_26-13		7350	7350	Yes	Yes		6	1/1/1944	120.6	DP 92 Replaced
36-68_37-69		7140	7140				15	1/1/1960	223.5	ACP Pipe
23-86_23-92		7128	7128				33	1/1/1965	124.5	Upstream of Aerial pipelines
23-90_23-91		7128	7128				24	1/1/1953	21.0	Abandoned?
30-50_30-51		6942	6942	Yes			12	1/1/1954	358.1	
24-2_24-14		6912	6912	Yes		Yes	24	1/1/1953	241.9	Upstream of Flume
19-43_19-44		6794	6794	Yes	Yes	Yes	8	1/1/1953	360.1	DP 92 Point Repair
23-16_23-46		6794	6794	Yes			15	1/1/1944	580.8	
24-PF_24-13		6780	6780				36	1/1/1971	646.8	
36-72_36-71		6720	6720				15	1/1/1960	208.2	
23-122_23-7		6660	6660	Yes			8		126.7	
23-77_23-124		6622	6622				8	1/1/1947	129.3	
23-88_23-89		6622	6622				8	1/1/1947	117.6	
20-62_20-64		6586	6586				15	1/1/1959	321.5	
22-28_22-29		6560	6560				24	1/1/1965	27.2	
13-48_21-69		6512	6512			Yes	12	1/1/1947	370.2	
23-87_23-90		6464	6464	Yes		Yes	24	1/1/1953	125.2	
13-63_13-62		6440	6440	Yes			8	1/1/1950	500.9	
37-66_37-65		6420	6420				15	1/1/1960	129.1	
37-67_37-66		6420	6420				15	1/1/1960	202.4	
27-66_28-85		6396	6396				8	1/1/1955	318.5	
23-92_23-94		6384	6384				33	1/1/1965	49.0	
T3_T4		6384	6384				36		57.4	
T4_T5		6384	6384				36		70.0	
37-63_37-62		6300	6300				15	1/1/1960	181.7	
30-51_31-7		6240	6240	Yes			12	1/1/1944	342.0	
23-69_23-76		6232	6232	Yes		Yes	8	1/1/1947	146.3	
5-81_12-3		6230	6230	Yes		Yes	8	1/1/1955	361.9	
23-47_23-48		6162	6162				12		13.4	
23-89_24-1		6142	6142	Yes			8	1/1/1947	547.2	
31-6_31-5		6120	6120				15	1/1/1954	94.3	
23-91_23-93		6048	6048				24		34.6	
24-14_24-PF		6048	6048			Yes	24		53.7	
24-15_24-PF		6048	6048				15		35.1	
35-88_36-56		6016	6016				8	1/1/1970	289.8	
13-61_13-60		6004	6004				10	1/1/1940	61.5	
19-102_19-110		5950	5950				6	1/1/1944	324.8	
36-85_37-67		5928	5928	Yes			15	1/1/1960	120.7	
22-124_22-123		5920	5920				24	1/1/1982	467.2	
23-94_24-3		5876	5876	Yes			33	1/1/1965	484.3	
30-48_30-50		5874	5874				12	1/1/1954	72.7	
23-97_24-2		5858	5858	Yes		Yes	24	1/1/1953	296.5	
11-73_11-72		5846	5846	Yes		Yes	10	1/1/1952	287.1	
23-47_23-65		5846	5846	Yes		Yes	24	1/1/1953	252.5	
36-57_36-61		5824	5824				8	1/1/1970	216.9	
14-27_14-37		5776	5776				8		288.9	
28-41_28-38		5700	5700				12	1/1/1953	302.9	
37-69_36-85		5700	5700				15	1/1/1960	47.7	
19-44_19-45		5696	5696			Yes	8	1/1/1953	189.6	
30-54_30-55		5696	5696				21	1/1/1966	87.3	
30-55_30-104		5696	5696				21	1/1/1966	529.5	
23-85_23-86		5676	5676				33	1/1/1965	46.2	
42-23_42-24		5670	5670	Yes			18	1/1/1965	138.2	
23-96_24-4		5656	5656			Yes	15	1/1/1944	297.0	
24-13_T2		5656	5656	Yes			36		877.6	
34-72_34-64		5632	5632				8	1/1/1979	140.7	
21-5_21-75		5616	5616				18	1/1/1953	556.8	
24-3_24-PF		5616	5616				33	1/1/1966	311.2	
36-73_36-72		5600	5600				15	1/1/1960	168.8	
22-104_23-2		5590	5590	Yes			6	1/1/1949	306.9	
22-56_22-57		5550	5550				15	1/1/1950	132.7	
T26_T27		5550	5550				36		786.9	
19-42_19-43		5530	5530				8	1/1/1953	104.9	
23-36_23-48		5530	5530				33	1/1/1965	346.7	
36-49_36-50		5530	5530	Yes		Yes	6	1/1/1944	316.4	

Table 4

Updated Gravity Sewer Asset Management Plan Risk Scores and Supporting Information

** Lines in RED font have an updated Risk score that is greater that the 2015 GSAMP. Lines highlighted in GREY have "Highest" or "High" priority based or Structural quick rating, and were not included on a prior CIP list.

Pipe ID	VWHA Priority (For Reference Only)	2015 GSAMP Risk Score	2020 Risk Score	On 2016 CIP List	On 2016-17RR List	On CIPPriority 17-18 List	Diameter (in)	Install Date	Length (ft)	CVSan Comments
23-57_23-56		5520	5520	Yes		Yes	8	1/1/1955	271.1	
27-99_27-81		5476	5476	Yes			8	1/1/1955	410.6	
23-20_23-42		5472	5472	Yes			6	1/1/1946	331.4	
35-89_35-88		5452	5452				12	1/1/1978	366.1	
23-76_23-77		5412	5412				8	1/1/1947	227.3	
23-43_23-69		5396	5396			Yes	8	1/1/1947	238.3	
28-9_28-70		5390	5390	Yes	Yes	Yes	8	1/1/1954	429.3	
13-62_13-61		5372	5372				8	1/1/1950	171.1	
36-63_36-73		5350	5350				15	1/1/1960	339.5	
36-69_36-68		5350	5350				15	1/1/1960	221.9	
36-70_36-69		5350	5350				15	1/1/1960	171.8	
36-71_36-70		5350	5350				15	1/1/1960	181.5	
37-65_37-64		5350	5350				15	1/1/1960	179.7	
22-8_22-12		5328	5328				21	1/1/1966	294.7	
30-46_30-47		5328	5328				15	1/1/1964	28.5	
32-4_23-125		5320	5320			Yes	6	1/1/1953	144.9	
22-107_22-108		5280	5280				24	1/1/1953	158.6	
30-58_31-3		5280	5280				21	1/1/1966	121.7	
31-7_31-6		5280	5280				12	1/1/1954	9.1	
29-76_29-77		5270	5270	Yes			10	1/1/1958	124.7	
T6_T7		5270	5270				36		361.5	
20-65_21-2		5252	5252	Yes			15	1/1/1953	514.2	
26-11_27-1		5250	5250	Yes		Yes	6	1/1/1944	427.0	
28-94_28-41		5250	5250	Yes			12	1/1/1975	566.6	
30-102_30-18		5250	5250				10	1/1/1958	203.5	
37-64_37-63		5250	5250				15	1/1/1960	156.2	
22-102_23-1		5246	5246	Yes			8	1/1/1946	493.6	
13-58_13-54		5244	5244				15	1/1/1955	285.2	
36-82_29-76		5244	5244				6		425.3	
36-67_36-68		5220	5220				8	1/1/1962	263.0	
23-46_23-47		5214	5214				15		14.1	
23-46_23-66		5214	5214			Yes	15	1/1/1944	248.2	
23-52_23-51		5200	5200				12	1/1/1953	373.5	
23-53_23-52		5200	5200	Yes			12	1/1/1953	192.6	
13-34_13-35		5180	5180	Yes			8	1/1/1953	146.0	
22-135_22-131		5180	5180	Yes		Yes	6	1/1/1944	231.5	
23-84_23-87		5160	5160			Yes	24	1/1/1953	51.2	
36-61_36-62		5160	5160				15	1/1/1960	151.4	
37-61_37-114Y		5160	5160				15	1/1/1960	178.5	
42-1_42-75		5160	5160				12	1/1/1960	222.2	
13-57_13-55		5120	5120	Yes			10	1/1/1940	202.0	
13-38_13-58		5106	5106	Yes			12	1/1/1950	350.6	
23-114_23-53		5106	5106				8	1/1/1944	379.7	
43-2_42-44		5106	5106	Yes			8	1/1/1962	214.8	
21-75_13-45		5104	5104				18	1/1/1953	334.4	
28-83_28-60		5100	5100				8	1/1/1971	96.1	
28-86_28-83		5100	5100				8	1/1/1976	222.4	
T20_T21		5100	5100				36		1073.3	
T21_T22		5100	5100				36		1001.0	
T27_T28		5100	5100				36		682.6	
T32_T33		5100	5100				42		726.9	
23-78R_23-77		5092	5092				6	1/1/1947	135.7	
32-32_32-35		5074	5074	Yes			8		355.1	
23-3_23-16		5070	5070	Yes	Yes		15	1/1/1944	264.5	
35-91_35-90		5056	5056				12	1/1/1978	334.2	
23-117_23-114		5040	5040				6	1/1/1944	583.0	
30-98_30-97		5040	5040	Yes		Yes	6	1/1/1944	191.4	
27-81_27-69		5032	5032				8	1/1/1955	433.1	
19-36_19-37		4980	4980	Yes		Yes	6	1/1/1959	368.0	
23-41_23-42		4970	4970	Yes			8	1/1/1945	183.6	
23-XX_23-91		4968	4968				33		166.3	
T7_T8		4960	4960				33		1152.6	
T8_T9		4960	4960				33		321.7	
22-87_22-110		4950	4950				18	1/1/1950	113.8	
19-104_19-103		4940	4940				18		33.3	
22-95_22-103		4940	4940				6	1/1/1949	111.3	
35-90_35-89		4888	4888				12	1/1/1978	328.2	
21-90_13-48		4884	4884				12	1/1/1953	14.0	
10-48_11-9		4864	4864				10	1/1/1954	393.6	
10-64_10-47		4864	4864			Yes	10	1/1/1954	289.9	
12-104_12-13		4864	4864				12	1/1/1977	46.1	
44-19_44-18		4864	4864	Yes			8	1/1/1979	202.8	

Table 4

Updated Gravity Sewer Asset Management Plan Risk Scores and Supporting Information

** Lines in RED font have an updated Risk score that is greater that the 2015 GSAMP. Lines highlighted in GREY have "Highest" or "High" priority based or Structural quick rating, and were not included on a prior CIP list.

Pipe ID	VWHA Priority (For Reference Only)	2015 GSAMP Risk Score	2020 Risk Score	On 2016 CIP List	On 2016-17RR List	On CIPPriority 17-18 List	Diameter (in)	Install Date	Length (ft)	CVSan Comments
28-70_28-71		4840	4840		Yes	Yes	8	1/1/1954	197.1	
36-50_36-82		4830	4830				6	1/1/1944	336.4	
35-96_35-57		4816	4816	Yes		Yes	6	1/1/1947	174.5	
19-38_19-42		4814	4814				8	1/1/1953	282.1	
T18_T19		4810	4810				36		746.1	
T23_T24		4810	4810				36		471.5	
30-53_30-47		4806	4806	Yes			12		194.8	
22-110_23-3		4800	4800				15	1/1/1947	316.0	
22-34_22-33		4800	4800				24	1/1/1966	37.3	
23-27_23-29		4800	4800	Yes			8	1/1/1955	62.5	
T25_T26		4774	4774				36		342.0	
13-10_13-16		4760	4760				21	1/1/1965	396.8	
21-2_21-4		4752	4752				15	1/1/1953	49.0	
42-75_36-61		4740	4740				12	1/1/1960	164.5	
30-54_30-53		4736	4736	Yes			15		6.5	
36-56_36-57		4732	4732	Yes			8	1/1/1970	418.3	
19-55_19-56		4730	4730	Yes			6	1/1/1944	452.9	
30-12_30-25		4712	4712				10	1/1/1973	194.0	
37-85_37-86		4700	4700	Yes			18	1/1/1982	134.5	
24-1_24-4		4686	4686				8	1/1/1947	39.0	
21-69_21-68		4680	4680			Yes	12	1/1/1947	390.7	
28-85_28-86		4680	4680				8	1/1/1944	44.1	
29-39_30-99		4672	4672	Yes			6	1/1/1944	519.2	
20-67R_20-66		4662	4662	Yes			6		286.7	
T13_T14		4650	4650				36		663.6	
T14_T15		4650	4650				36		729.0	
T16_T17		4650	4650				36		1407.2	
T19_T20		4650	4650				36		830.7	
21-1R_21-2		4644	4644				8	1/1/1968	195.7	
32-35_23-114		4644	4644	Yes			8	1/1/1955	497.9	
27-2_27-1		4640	4640	Yes	Yes		6	1/1/1944	605.2	
31-100_32-4		4636	4636	Yes		Yes	6	1/1/1948	314.2	
12-3_12-4		4628	4628			Yes	6	1/1/1955	68.0	
19-37_19-105		4628	4628	Yes		Yes	8	1/1/1953	321.2	
34-26_34-25		4600	4600				6	1/1/1947	231.0	
13-11_13-43		4588	4588				8	1/1/1940	612.8	
37-109_30-109		4588	4588				18	1/1/1982	494.7	
10-47_10-48		4560	4560			Yes	10	1/1/1954	306.4	
36-47_36-48		4554	4554				6	1/1/1944	265.5	
21-62_21-98		4550	4550				27	1/1/1965	257.1	
24-4_24-15		4536	4536			Yes	15	1/1/1944	246.3	
23-17_23-45		4512	4512				24	1/1/1953	579.3	
22-106_23-15		4500	4500				30	1/1/1965	440.5	
22-131_23-122		4480	4480	Yes			6	1/1/1939	165.2	
30-93_30-54		4480	4480			Yes	8	1/1/1944	478.2	
32-37_32-48		4480	4480	Yes		Yes	6		199.5	
T11_T12		4480	4480				36		1048.4	
42-2_42-1		4472	4472				12	1/1/1960	220.1	
43-4R_42-74		4472	4472				6	1/1/1969	282.5	
42-6_42-67		4444	4444				12	1/1/1970	166.0	
23-79_23-XX		4424	4424			Yes	15		165.9	
T22_T23		4420	4420				36		803.3	
T24_T25		4420	4420				36		983.9	
29-77_30-102		4416	4416				10	1/1/1958	169.5	
12-63_13-5		4408	4408	Yes	Yes		12	1/1/1950	675.2	
14-37_14-38		4408	4408				8	1/1/1985	242.6	
23-124_23-88		4402	4402				8	1/1/1953	135.2	
42-34_42-35		4360	4360				14	1/1/1965	393.1	
36-58_36-57		4352	4352				12	1/1/1970	54.2	
23-121_23-122		4340	4340				8		53.7	
23-125_23-121		4340	4340				8		33.1	
23-128_23-125		4340	4340	Yes			8		320.3	
27-115_27-119		4320	4320			Yes	8	1/1/1954	217.2	
22-43_22-124		4312	4312				24	1/1/1982	60.7	
12-50_12-48		4300	4300				21	1/1/1965	406.3	
37-62_37-61		4300	4300			Yes	15	1/1/1960	408.0	
12-96_12-62		4292	4292				12	1/1/1952	261.6	
22-103_22-104		4290	4290				6	1/1/1949	187.1	
23-19_23-37		4270	4270				8	1/1/1945	149.5	
23-37_23-41		4270	4270	Yes		Yes	6		86.9	
31-103_31-100		4270	4270	Yes		Yes	6	1/1/1948	320.2	
23-48_23-64		4266	4266				33	1/1/1965	259.0	

Table 4

Updated Gravity Sewer Asset Management Plan Risk Scores and Supporting Information

** Lines in RED font have an updated Risk score that is greater that the 2015 GSAMP. Lines highlighted in GREY have "Highest" or "High" priority based or Structural quick rating, and were not included on a prior CIP list.

Pipe ID	VWHA Priority (For Reference Only)	2015 GSAMP Risk Score	2020 Risk Score	On 2016 CIP List	On 2016-17RR List	On CIPPriority 17-18 List	Diameter (in)	Install Date	Length (ft)	CVSan Comments
35-92_35-91		4266	4266				12	1/1/1978	395.1	
30-42_30-45		4260	4260			Yes	15	1/1/1964	405.3	
42-8_42-7		4256	4256	Yes			8	1/1/1960	258.8	
19-101_19-102		4250	4250				8	1/1/1944	359.2	
28-60_19-101		4250	4250				8	1/1/1944	380.8	
12-94_12-6		4224	4224				6	1/1/1944	250.1	
27-1_27-103		4224	4224				6	1/1/1944	179.0	
23-118_23-117		4216	4216	Yes			6	1/1/1947	116.5	
19-60_19-56		4214	4214	Yes	Yes		6	1/1/1948	107.5	
30-66_21-20		4214	4214	Yes		Yes	6	1/1/1944	318.4	
T15_T16		4200	4200				36		121.8	
T17_T18		4200	4200				36		858.8	
20-92_20-13		4180	4180	Yes		Yes	6	1/1/1950	121.0	
30-104_30-105		4160	4160				24	1/1/1999	263.5	
31-87_31-88		4160	4160	Yes			8	1/1/1949	131.5	
42-32_42-34		4160	4160				14	1/1/1965	97.3	
22-22_22-127		4158	4158				30	1/1/1965	309.4	
13-45_21-90		4144	4144				18	1/1/1953	71.3	
13-52_13-50		4144	4144				27	1/1/1965	368.9	
31-2_22-8		4144	4144				21	1/1/1966	253.3	
36-48_36-49		4140	4140	Yes	Yes	Yes	6	1/1/1944	73.7	
37-3_36-50		4130	4130				6	1/1/2002	136.2	
13-49_21-67		4128	4128				27	1/1/1965	336.0	
23-64_23-85		4128	4128				33	1/1/1965	321.3	
29-9_20-14		4128	4128	Yes	Yes	Yes	6	1/1/1948	503.8	
11-10_11-12		4108	4108			Yes	12	1/1/1959	441.5	
30-99_30-98		4108	4108	Yes			6	1/1/1944	138.1	
13-54_13-53		4104	4104				15	1/1/1955	107.6	
20-40_21-11		4104	4104			Yes	8	1/1/1944	322.3	
21-19_30-67		4104	4104			Yes	8	1/1/1944	251.8	
24-11_24-10		4104	4104	Yes			8	1/1/1944	76.0	
30-67_30-68		4104	4104			Yes	8	1/1/1962	16.2	
32-5_32-4		4104	4104	Yes			6	1/1/1948	243.2	
30-63_30-62		4096	4096			Yes	8	1/1/1944	181.5	
42-31_42-32		4080	4080				14	1/1/1965	219.9	
13-64_13-63		4070	4070				6	1/1/1950	289.2	
27-12_27-14		4070	4070				6	1/1/1954	91.3	
44-13_45-15		4060	4060			Yes	8	1/1/1979	221.8	
26-13_26-12		4050	4050	Yes	Yes		6	1/1/1944	289.6	
29-85_29-76		4050	4050				10	1/1/1958	142.5	
31-99R_22-136		4032	4032	Yes			6	1/1/1948	196.0	
12-30_12-29		4030	4030				15	1/1/1965	91.9	
28-51_19-109		4030	4030				10	1/1/1953	520.3	
T10_T11		4030	4030				36		418.1	
T28_T29		4030	4030				42		1087.5	
T29_T30		4030	4030				42		1102.6	
T30_T31		4030	4030				42		470.7	
T31_T32		4030	4030				42		824.1	
22-10_22-11		3996	3996				15	1/1/1966	186.2	
22-96R_22-97		3996	3996				8	1/1/1956	145.4	
27-69_27-70		3996	3996				8	1/1/1955	117.4	
27-20_27-115		3960	3960				8	1/1/1954	442.8	
20-51_20-50		3956	3956	Yes	Yes		6	1/1/1944	462.8	
21-7_21-8		3956	3956	Yes	Yes		6	1/1/1944	79.7	
21-8_21-95		3956	3956	Yes	Yes		6	1/1/1944	67.6	
23-34_23-33		3956	3956	Yes	Yes		6	1/1/1948	311.0	
28-3_28-5		3956	3956	Yes			8	1/1/1944	314.6	
34-49_34-48		3956	3956	Yes		Yes	8	1/1/1955	223.3	
37-9R_37-8		3956	3956				6	1/1/1948	301.1	
11-107_11-10		3952	3952			Yes	12	1/1/2009	222.9	
20-7_20-8		3952	3952				15	1/1/1953	83.4	
31-86R_31-87		3952	3952			Yes	8	1/1/1949	88.7	
19-100_19-32		3920	3920	Yes		Yes	6	1/1/1944	345.8	
20-66_20-84		3920	3920				6		90.6	
31-72_32-9		3920	3920	Yes			6	1/1/1946	298.6	
32-36_32-26		3920	3920	Yes			6	1/1/1971	413.5	
12-29_12-58		3900	3900				18	1/1/1965	416.2	
21-63_21-62		3900	3900				21	1/1/1965	5.6	
21-64_21-62		3900	3900				27	1/1/1965	26.3	
22-86_22-87		3900	3900				18	1/1/1950	129.2	
22-90_22-106		3900	3900				30	1/1/1965	214.9	
23-15_23-36		3900	3900				33	1/1/1965	448.8	

Table 4

Updated Gravity Sewer Asset Management Plan Risk Scores and Supporting Information

** Lines in RED font have an updated Risk score that is greater that the 2015 GSAMP. Lines highlighted in GREY have "Highest" or "High" priority based or Structural quick rating, and were not included on a prior CIP list.

Pipe ID	VWHA Priority (For Reference Only)	2015 GSAMP Risk Score	2020 Risk Score	On 2016 CIP List	On 2016-17RR List	On CIPPriority 17-18 List	Diameter (in)	Install Date	Length (ft)	CVSan Comments
26-17_26-14		3900	3900				8	1/1/1960	101.7	
11-77_11-75		3894	3894	Yes			8	1/1/1954	126.5	
31-90_31-91		3894	3894	Yes			6		66.6	
63-70_63-34		3894	3894				8		46.1	
42-35_42-6		3880	3880				14	1/1/1965	72.9	
22-115R_22-116		3870	3870	Yes			6	1/1/1948	224.1	
23-39_23-38		3870	3870	Yes			8	1/1/1951	143.5	
5-61R_5-60		3870	3870	Yes			8	1/1/1954	103.1	
42-92_42-29		3864	3864				14		155.2	
13-32_13-33		3850	3850				8	1/1/1959	42.0	
20-13_20-14		3850	3850			Yes	6	1/1/1948	354.9	
27-120_27-121		3850	3850				8	1/1/1963	146.3	
28-71_28-94		3850	3850		Yes	Yes	8	1/1/1976	222.0	
34-1_34-2		3850	3850				8	1/1/1963	238.1	
34-2_34-3		3850	3850				8	1/1/1963	101.1	
34-3_34-5		3850	3850				8	1/1/1963	365.9	
43-26_43-28		3850	3850				8	1/1/1962	243.7	
13-50_13-49		3840	3840				27	1/1/1965	384.8	
21-77_21-75		3840	3840				8	1/1/1947	331.8	
22-29_22-65		3840	3840				24	1/1/1965	493.5	
22-21_22-23		3800	3800				8	1/1/1953	184.7	
34-13_28-15		3800	3800	Yes			6	1/1/1955	303.9	
42-30_42-31		3800	3800				14	1/1/1965	72.8	
23-45_23-47		3792	3792				24	1/1/1943	314.9	
23-65_23-84		3792	3792			Yes	24	1/1/1953	318.5	
31-101_31-100		3782	3782	Yes			6	1/1/1948	314.7	
22-24_22-127		3780	3780				8	1/1/1984	395.5	
10-31_10-32		3776	3776				10	1/1/1952	83.0	
12-113_12-76		3776	3776	Yes			10		188.8	
36-45_36-47		3776	3776	Yes	Yes	Yes	6	1/1/1954	238.9	
23-119_23-118		3774	3774	Yes		Yes	6	1/1/1947	255.4	
5-64_5-63		3770	3770			Yes	8	1/1/1955	36.2	
T38_T39		3770	3770				54		928.1	
30-26_30-28		3740	3740				10		126.3	
55-15_55-14		3740	3740				8	1/1/1979	203.1	
19-105_19-38		3738	3738				8	1/1/1953	50.2	
29-35_29-106		3726	3726				12	1/1/1966	55.4	
10-101_10-64		3724	3724				8	1/1/1954	405.6	
13-68_13-90		3724	3724				6	1/1/1940	493.5	
29-105_29-85		3724	3724				6		101.5	
29-74_29-105		3724	3724				6	1/1/1950	227.2	
30-55_30-49		3724	3724				6	1/1/1944	248.2	
23-33_23-57		3720	3720				8	1/1/1955	127.8	
13-41_13-53		3700	3700				24	1/1/1965	52.3	
13-42_13-41		3700	3700				21	1/1/1965	112.5	
13-53_13-52		3700	3700				24	1/1/1965	12.7	
63-34_63-33		3696	3696				8		182.5	
23-42_23-43		3692	3692				8	1/1/1945	134.9	
20-89_21-7		3680	3680	Yes		Yes	6	1/1/1967	316.3	
23-59R_23-58		3680	3680				6	1/1/1963	373.6	
37-6_37-4		3680	3680			Yes	6	1/1/1948	289.1	
44-53_44-16		3680	3680	Yes			8	1/1/1985	447.2	
42-61_42-60		3658	3658	Yes			8	1/1/1990	286.7	
22-138_22-137		3648	3648				6		248.0	
44-14_44-13		3648	3648			Yes	8	1/1/1979	209.0	
44-18_44-17		3648	3648			Yes	8	1/1/1979	175.8	
13-35_13-62		3640	3640	Yes			8	1/1/1950	262.0	
21-68_21-66		3640	3640				12	1/1/1953	16.6	
T12_T13		3640	3640				36		334.7	
T9_T10		3640	3640				33		383.4	
11-58_11-62		3634	3634				12	1/1/1965	596.2	
5-79_5-81		3634	3634			Yes	8	1/1/1955	75.3	
27-121_27-17		3630	3630				8	1/1/1954	198.3	
27-17_27-18		3630	3630				8	1/1/1954	206.1	
28-11_28-9		3630	3630				8	1/1/1954	115.0	
31-83R_31-84		3626	3626				6	1/1/1949	127.0	
36-62_36-63		3612	3612				15	1/1/1960	160.4	
19-26_19-27		3600	3600				6	1/1/1944	459.0	
22-122_22-36		3600	3600				24	1/1/1966	287.7	
22-36_22-34		3600	3600				24	1/1/1966	474.1	
23-56_23-51		3600	3600				8	1/1/1955	253.0	
26-12_26-11		3600	3600				6	1/1/1944	299.3	

Table 4

Updated Gravity Sewer Asset Management Plan Risk Scores and Supporting Information

** Lines in RED font have an updated Risk score that is greater that the 2015 GSAMP. Lines highlighted in GREY have "Highest" or "High" priority based or Structural quick rating, and were not included on a prior CIP list.

Pipe ID	VWHA Priority (For Reference Only)	2015 GSAMP Risk Score	2020 Risk Score	On 2016 CIP List	On 2016-17RR List	On CIPPriority 17-18 List	Diameter (in)	Install Date	Length (ft)	CVSan Comments
29-33_29-35		3588	3588				12	1/1/1966	331.9	
30-68_30-63		3588	3588			Yes	8	1/1/1944	574.6	
13-52_13-48		3584	3584				15	1/1/1955	341.0	
20-84_20-68		3584	3584				6	1/1/1944	34.9	
35-33R_35-32		3584	3584				8	1/1/1953	283.7	
42-45_42-44		3584	3584	Yes			8	1/1/1962	248.3	
21-11_21-12		3564	3564			Yes	8	1/1/1944	128.6	
23-21R_23-44R		3564	3564				6		385.6	
23-82_23-80		3564	3564				6	1/1/1947	131.6	
13-16_13-42		3560	3560				21	1/1/1965	403.7	
28-87_28-86		3552	3552				6	1/1/1976	313.6	
30-84_30-43		3552	3552				18	1/1/1982	59.7	
31-1_22-9		3552	3552				15	1/1/1982	129.3	
34-65_34-72		3534	3534				8	1/1/1979	345.6	
23-51_23-50		3520	3520				12	1/1/1953	270.7	
43-25_43-26		3520	3520				8	1/1/1966	398.2	
30-114_30-80		3510	3510				15	1/1/1966	305.9	
28-15_28-16		3500	3500				6	1/1/1953	154.0	
34-24_34-13		3500	3500				6	1/1/1947	144.6	
34-25_34-24		3500	3500				6	1/1/1955	224.2	
45-6_45-7		3500	3500				10	1/1/1965	415.7	
12-86_12-93		3496	3496	Yes			6	1/1/1944	321.1	
14-30_14-29		3496	3496	Yes			6	1/1/1946	258.2	
32-45_32-46		3496	3496				8	1/1/2011	145.1	
34-55_34-13		3496	3496				8	1/1/1953	127.5	
35-34R_35-35		3496	3496	Yes			8	1/1/1953	221.3	
37-84_37-85		3496	3496				18	1/1/1982	590.7	
9-104_17-62		3496	3496				8	1/1/1952	270.2	
30-25_30-26		3476	3476				10	1/1/1973	179.2	
30-97_30-112		3476	3476				15	1/1/1966	183.0	
36-43_36-44		3472	3472				8	1/1/1955	409.2	
22-97_22-101		3456	3456				8	1/1/1956	131.7	
23-1_23-18		3456	3456				8	1/1/1945	226.0	
23-18_23-19		3456	3456				8	1/1/1945	59.4	
31-108_31-92		3456	3456	Yes			6	1/1/1948	173.9	
29-95_30-97		3450	3450				12	1/1/1966	29.9	
T34_T35		3450	3450				54		850.5	
12-48_13-10		3440	3440				21	1/1/1965	402.4	
13-36R_13-35		3440	3440			Yes	8	1/1/1953	237.7	
32-42_32-45		3440	3440				6	1/1/1949	144.6	
32-44_32-45		3440	3440	Yes		Yes	6	1/1/1949	141.6	
23-7_23-5		3422	3422				8	1/1/1955	385.7	
36-77_36-67		3422	3422				8	1/1/1982	35.0	
22-79_22-80		3420	3420				6	1/1/1947	329.6	
34-17R_34-16		3420	3420			Yes	8	1/1/1955	195.9	
13-33_13-34		3410	3410				8	1/1/1953	381.9	
23-50_23-49		3410	3410				12	1/1/1953	365.9	
27-119_28-11		3410	3410				8	1/1/1954	84.7	
28-61_28-60		3410	3410				6	1/1/1944	356.5	
55-16_55-15		3410	3410				8	1/1/1979	212.1	
26-18_26-17		3404	3404				6	1/1/1960	487.8	
29-46_29-45		3404	3404				6	1/1/1946	450.3	
31-85_31-87		3404	3404				8	1/1/1949	132.1	
23-2_23-20		3380	3380				6	1/1/1946	322.4	
31-4_31-1		3380	3380				15	1/1/1966	380.3	
45-5_45-6		3380	3380				8	1/1/1964	58.2	Marked by CSM
T36_T37		3380	3380				54		663.9	
T37_T38		3380	3380				54		592.6	
20-14_20-16		3360	3360			Yes	6	1/1/1948	273.3	
21-118_21-77		3360	3360				8	1/1/1947	93.3	
21-74_21-90		3360	3360				6	1/1/1947	330.0	
22-108_23-17		3360	3360				24	1/1/1953	372.5	
22-65_22-92		3360	3360				24	1/1/1965	398.8	
27-18_27-20		3360	3360				8	1/1/1954	198.6	
30-106_30-58		3360	3360				24	1/1/1999	23.8	
44-15_44-14		3360	3360			Yes	8	1/1/1979	186.9	
44-17_44-15		3360	3360			Yes	8	1/1/1979	115.2	
45-15_45-14		3360	3360				8	1/1/1979	288.1	
14-39_14-38		3354	3354	Yes	Yes		6	1/1/1950	367.5	
26-20R_26-19		3354	3354	Yes		Yes	6	1/1/1954	294.5	
32-22_32-21		3354	3354	Yes			6	1/1/1949	331.3	
35-24_35-97		3354	3354	Yes		Yes	8	1/1/1953	193.3	

Table 4

Updated Gravity Sewer Asset Management Plan Risk Scores and Supporting Information

** Lines in RED font have an updated Risk score that is greater that the 2015 GSAMP. Lines highlighted in GREY have "Highest" or "High" priority based or Structural quick rating, and were not included on a prior CIP list.

Pipe ID	VWHA Priority (For Reference Only)	2015 GSAMP Risk Score	2020 Risk Score	On 2016 CIP List	On 2016-17RR List	On CIPPriority 17-18 List	Diameter (in)	Install Date	Length (ft)	CVSan Comments
36-53_29-72		3354	3354				8		329.3	
24-9_24-11		3348	3348	Yes			8	1/1/1944	503.1	
12-4_12-5		3344	3344				8	1/1/1962	368.8	
10-113_10-65		3330	3330			Yes	6	1/1/1954	239.9	
19-8_19-9		3330	3330				8	1/1/1955	40.2	
23-9_23-27		3330	3330	Yes			8	1/1/1955	225.9	
27-50_27-49		3330	3330				6	1/1/1948	168.8	
36-3_36-2		3330	3330				10	1/1/1958	269.1	
13-55_13-52		3328	3328				10	1/1/1940	109.0	
35-93_35-92		3318	3318				10	1/1/1978	336.8	
62-23_62-24		3312	3312				8	1/1/1979	149.5	
62-39_63-70		3304	3304				8		141.0	
62-40_62-39		3304	3304				8		253.3	
72-17_63-32		3304	3304			Yes	8		199.0	
30-40_30-38		3300	3300				15	1/1/1964	13.1	
4-43_4-42		3300	3300				6	1/1/1976	556.7	
23-116_23-127		3276	3276				8		53.2	
31-82_31-84		3268	3268	Yes			8	1/1/1949	245.0	
37-86_37-89		3268	3268				18	1/1/1982	27.3	
22-11_22-12		3256	3256				15	1/1/1966	26.5	
27-82_27-81		3256	3256				8	1/1/1952	267.2	
29-72_29-85		3250	3250				10	1/1/1958	251.7	
13-43_13-42		3240	3240				10	1/1/1965	21.1	
31-105_31-90		3240	3240				8	1/1/1949	183.9	
42-20_42-21		3240	3240				14	1/1/1965	304.0	
42-21_42-22		3240	3240				14	1/1/1965	77.9	
42-22_42-23		3240	3240				14	1/1/1965	184.4	
13-90_13-60		3234	3234				6	1/1/1940	13.4	
22-12_22-43		3234	3234				24	1/1/1966	426.3	
30-59_30-55		3234	3234				6	1/1/1944	133.5	
30-64R_30-61		3234	3234				6	1/1/1944	439.1	
35-38_35-37		3234	3234				8	1/1/1953	60.6	
36-36_29-103		3234	3234				6	1/1/1944	694.3	
19-46_19-45		3224	3224				8	1/1/1959	256.4	
14-44R_14-34		3220	3220				6	1/1/1963	154.0	
19-40_19-41		3220	3220				6	1/1/1944	351.2	
23-130P_23-117		3220	3220				6	1/1/1955	347.6	
27-19R_27-18		3220	3220				8	1/1/1948	142.4	
37-10_37-8		3220	3220				6	1/1/1950	364.8	
37-4_37-3		3220	3220				6	1/1/1948	270.4	
37-8_37-6		3220	3220				6	1/1/1948	275.9	
41-13_41-24		3220	3220				14		105.4	
42-28_42-92		3220	3220				14		120.7	
34-57_35-93		3192	3192				10	1/1/1978	264.0	
34-69_34-68		3192	3192				8	1/1/1979	302.0	
20-2_20-57		3190	3190				8	1/1/1955	160.9	
63-36_63-35		3186	3186				8	1/1/1979	303.4	
22-101_22-102		3172	3172				8	1/1/1956	145.1	
23-38_23-41		3172	3172				6	1/1/1947	223.4	
37-11_37-10		3172	3172				6	1/1/1950	164.4	
44-20_44-19		3172	3172				8	1/1/1979	283.5	
21-4_21-5		3168	3168				15	1/1/1953	34.4	
34-63_34-62		3168	3168				10	1/1/1979	278.5	
22-85_22-86		3162	3162	Yes			6	1/1/1947	127.3	
35-48_35-52		3162	3162			Yes	8	1/1/1953	135.1	
11-57_11-58		3160	3160				12	1/1/1965	441.7	
34-66_34-65		3154	3154				8	1/1/1979	317.7	
34-68_34-67		3154	3154				8	1/1/1979	299.6	
13-97_13-18		3150	3150	Yes			12	1/1/1950	403.7	
20-58_20-59		3150	3150				15	1/1/1953	417.3	
20-59_20-61		3150	3150				15	1/1/1959	239.1	
35-49_35-48		3150	3150				8	1/1/1953	135.1	
19-32_19-30		3136	3136				6	1/1/1955	178.5	
28-65_28-77		3136	3136				6	1/1/1944	378.1	
30-44_30-50		3136	3136				6	1/1/1944	457.6	
22-123_22-122		3124	3124				24	1/1/1982	484.0	
10-75_10-74		3120	3120				8	1/1/1950	332.5	
19-87_19-28		3120	3120				6		453.2	
20-15_20-26		3120	3120				6	1/1/1944	601.1	
20-36_20-38		3120	3120				6	1/1/1944	126.3	
21-51_21-49		3120	3120				6	1/1/1944	612.0	
22-66_22-90		3120	3120				30	1/1/1965	444.0	

Table 4

Updated Gravity Sewer Asset Management Plan Risk Scores and Supporting Information

** Lines in RED font have an updated Risk score that is greater that the 2015 GSAMP. Lines highlighted in GREY have "Highest" or "High" priority based or Structural quick rating, and were not included on a prior CIP list.

Pipe ID	VWHA Priority (For Reference Only)	2015 GSAMP Risk Score	2020 Risk Score	On 2016 CIP List	On 2016-17RR List	On CIPPriority 17-18 List	Diameter (in)	Install Date	Length (ft)	CVSan Comments
23-70_23-40		3120	3120			Yes	8	1/1/1962	276.7	
23-72_23-70		3120	3120			Yes	8	1/1/1962	227.7	
23-75R_23-72		3120	3120			Yes	8	1/1/1962	138.2	
28-43_28-42		3120	3120				10	1/1/1953	155.4	
28-5_28-65		3120	3120				6	1/1/1944	430.5	
28-76_28-43		3120	3120				10	1/1/1953	220.6	
29-47_29-46		3120	3120			Yes	6	1/1/1946	408.0	
29-80_29-77		3120	3120				6	1/1/1946	228.2	
30-100R_29-80		3120	3120			Yes	6	1/1/1946	177.6	
36-14_36-15		3120	3120				8	1/1/1958	302.0	
36-42_36-36		3120	3120				6	1/1/1944	465.1	
41-8_42-13		3120	3120			Yes	8	1/1/1960	469.8	
30-43_30-42		3108	3108				12	1/1/1964	257.6	
43-28_43-2		3100	3100				8	1/1/1962	159.0	
22-16_22-33		3082	3082				12	1/1/1953	328.3	
13-104_13-76		3080	3080				8		308.8	
13-20_13-19		3080	3080				8	1/1/1959	290.4	
20-18_20-33		3080	3080			Yes	6	1/1/1944	379.4	
23-49_23-48		3080	3080				12	1/1/1953	230.5	
27-14_27-16		3080	3080				8	1/1/1954	370.8	
27-16_27-17		3080	3080				8	1/1/1954	99.8	
28-14_28-9		3080	3080				8	1/1/1944	349.2	
44-24_44-23		3080	3080				8	1/1/1979	273.8	
31-92_22-137		3072	3072				6	1/1/1948	276.5	
10-39_10-31		3068	3068				8	1/1/1954	135.5	
19-27_19-28		3068	3068				8	1/1/1998	107.5	
19-28_19-29		3068	3068				8	1/1/1998	136.6	
19-56_19-57		3068	3068	Yes		Yes	8		98.6	
32-26_32-32		3068	3068				8	1/1/1971	217.3	
36-44_36-45		3068	3068				8	1/1/1954	149.6	
12-5_12-104		3040	3040				12	1/1/1977	180.9	
22-1_22-23		3040	3040				21	1/1/1953	151.6	
22-28_22-63		3040	3040	Yes			15	1/1/1965	266.0	
23-104_23-105		3040	3040			Yes	8	1/1/1944	336.8	
28-74_28-75		3040	3040				8	1/1/1954	34.5	
29-20_29-23		3040	3040			Yes	8	1/1/1950	253.2	
41-12_42-73		3040	3040				14	1/1/1965	200.0	
41-24_41-12		3040	3040				14	1/1/1965	129.7	
42-18_42-19		3040	3040				14	1/1/1965	86.1	
42-19_42-20		3040	3040				14	1/1/1965	212.7	
42-24_42-25		3040	3040				14	1/1/1965	282.1	
42-25_42-26		3040	3040				14	1/1/1965	259.9	
42-26_42-28		3040	3040				14	1/1/1965	202.0	
20-45_21-89		3038	3038				8	1/1/2010	164.3	
20-85_20-65		3038	3038				8	1/1/1980	181.3	
32-25_32-26		3038	3038				6	1/1/1939	377.1	
32-9_32-25		3038	3038	Yes		Yes	6	1/1/1939	396.4	
11-72_11-57		3036	3036				10	1/1/1965	252.3	
31-104_32-7		3036	3036			Yes	8	1/1/1953	142.2	
32-7_32-6		3036	3036			Yes	8	1/1/1953	67.9	
11-115_10-113		3034	3034				8	1/1/1956	291.9	
22-23_22-28		3024	3024			Yes	21	1/1/1953	328.8	
23-61_23-82		3024	3024				6	1/1/1947	451.7	
23-81R_23-80		3024	3024				6	1/1/1947	73.0	
23-83R_23-82		3024	3024				6	1/1/1947	59.9	
11-13_11-15		3010	3010				8		218.8	DP 95 Replaced
19-62_19-61		3010	3010	Yes	Yes		6	1/1/1948	330.9	
23-66_23-79		3002	3002			Yes	15	1/1/1944	159.8	
12-58_12-57		3000	3000				18	1/1/1965	110.4	
19-108_20-92		2990	2990				6	1/1/1944	500.6	
21-99_22-22		2990	2990			Yes	27	1/1/1965	563.7	
T33_T34		2990	2990				54		6.4	
T35_T36		2990	2990				54		379.1	
T39_T40		2990	2990				54		39.7	
T40_T41		2990	2990				54		640.0	
21-76_21-74		2976	2976	Yes			8	1/1/1947	282.5	
22-137_22-136		2976	2976				6	1/1/1944	263.8	
27-65_27-66		2976	2976	Yes			8	1/1/1953	132.9	
19-98_19-99		2970	2970				8	1/1/1967	223.7	
34-4_34-3		2970	2970				8		83.6	
44-26_44-24		2970	2970				8	1/1/1979	297.7	
19-39_19-40		2964	2964	Yes		Yes	6	1/1/1944	393.8	

Table 4

Updated Gravity Sewer Asset Management Plan Risk Scores and Supporting Information

** Lines in RED font have an updated Risk score that is greater that the 2015 GSAMP. Lines highlighted in GREY have "Highest" or "High" priority based or Structural quick rating, and were not included on a prior CIP list.

Pipe ID	VWHA Priority (For Reference Only)	2015 GSAMP Risk Score	2020 Risk Score	On 2016 CIP List	On 2016-17RR List	On CIPPriority 17-18 List	Diameter (in)	Install Date	Length (ft)	CVSan Comments
20-26_20-27		2964	2964	Yes	Yes		6	1/1/1944	576.1	
22-134R_22-133		2964	2964				6		260.4	
30-101R_30-102		2964	2964	Yes		Yes	6	1/1/1958	29.7	
31-78_31-79		2964	2964	Yes		Yes	8	1/1/1949	212.1	
34-20R_34-19		2964	2964				8	1/1/1955	200.8	
36-51_36-52		2964	2964				6	1/1/1950	343.6	
37-12R_37-11		2964	2964	Yes		Yes	6	1/1/1950	83.3	
13-99_13-49		2960	2960	Yes		Yes	6		275.3	
45-11R_45-9		2960	2960				8	1/1/1975	417.3	
14-28_14-27		2944	2944				6	1/1/1946	80.3	
14-33R_14-34		2944	2944				6	1/1/1946	169.8	
14-36_14-37		2944	2944				6	1/1/1946	173.2	
15-10_23-73		2944	2944				8	1/1/1962	256.7	
21-120_21-114		2944	2944				24		87.8	
26-48_26-18		2944	2944				6		400.6	
28-32_35-96		2944	2944				6	1/1/1974	307.4	
31-79_31-85		2944	2944	Yes			8	1/1/1949	235.5	
35-10_35-6		2944	2944				8	1/1/1954	184.5	
35-23R_35-22		2944	2944				8	1/1/1953	158.4	
36-12_36-13		2944	2944			Yes	8	1/1/1958	364.9	
5-62_5-58		2944	2944			Yes	8	1/1/1954	464.8	
30-23_30-24		2940	2940				6	1/1/1946	299.4	
40-5_40-6		2940	2940				8	1/1/1959	301.2	
40-6_40-7		2940	2940				8	1/1/1959	299.2	
40-7_40-8		2940	2940				8	1/1/1959	298.5	
41-3_41-4		2940	2940			Yes	8	1/1/1960	348.7	
21-25_22-9		2924	2924				6	1/1/1944	332.7	
29-10_20-16		2924	2924	Yes			6	1/1/1944	514.4	
29-40_29-39		2912	2912				6	1/1/1944	208.0	
29-45_29-39		2912	2912				6	1/1/1946	197.3	
36-29_36-43		2912	2912			Yes	8	1/1/1958	289.4	
20-27_20-53		2898	2898				15	1/1/1953	206.1	
34-70_34-69		2898	2898				8	1/1/1979	300.3	
62-12_62-15		2898	2898				8	1/1/1979	251.5	
62-15_62-16		2898	2898			Yes	8	1/1/1979	266.3	
34-67_34-66		2888	2888				8	1/1/1979	300.1	
47-6_47-7		2888	2888				8	1/1/1979	128.6	
63-21_63-20		2888	2888				8	1/1/1979	283.4	
10-67_10-66		2886	2886			Yes	8	1/1/1952	306.3	
12-9R_12-8		2886	2886				8	1/1/1962	261.6	
14-7_14-6		2886	2886				6	1/1/1946	231.4	
14-9R_14-6		2886	2886				6	1/1/1946	218.2	
19-19_19-24		2886	2886				6	1/1/1961	193.9	
22-114R_22-114		2886	2886				6		42.1	
28-79R_28-80		2886	2886			Yes	6	1/1/1944	317.9	
36-84R_36-83		2886	2886				6	1/1/1947	183.1	
5-52_5-51		2886	2886				8	1/1/1954	119.1	
10-107_10-55		2880	2880			Yes	8	1/1/1952	31.1	
10-56_10-107		2880	2880			Yes	8	1/1/1952	100.2	
10-71_10-70		2880	2880				8	1/1/1952	360.7	
18-18_18-19		2880	2880				8	1/1/1952	181.3	
22-130_22-23		2880	2880				8	1/1/1953	334.9	
23-6_23-9		2880	2880				8	1/1/1955	97.3	
27-49_27-112		2880	2880				6	1/1/1948	246.7	
28-73_28-75		2880	2880	Yes			6	1/1/1944	254.4	
29-34R_29-33		2880	2880				6	1/1/1951	212.2	
30-14R_30-15		2880	2880				8	1/1/1957	244.1	
9-44_9-43		2880	2880				8	1/1/1952	121.2	
29-101_29-102		2870	2870				10	1/1/1958	98.6	
36-1_36-41		2870	2870	Yes		Yes	10	1/1/1958	146.9	
45-3_41-20		2870	2870				8	1/1/1964	304.7	
13-4_13-21		2860	2860				8	1/1/1950	203.5	
19-22_28-83		2860	2860				6	1/1/1971	163.7	
20-5_20-54		2860	2860	Yes			8	1/1/1949	400.0	
20-53_20-54		2860	2860				15	1/1/1953	314.5	
20-55_20-56		2860	2860				15	1/1/1953	332.4	
22-136_22-135		2860	2860				6	1/1/1944	98.4	
22-33_22-28		2860	2860				24	1/1/1966	715.3	
26-15_26-14		2860	2860				8	1/1/1960	57.2	
28-81_19-101		2860	2860			Yes	6	1/1/1944	305.7	
28-89_20-92		2860	2860	Yes		Yes	8	1/1/1978	319.4	
29-1_20-13		2860	2860				8	1/1/1950	257.3	

Table 4

Updated Gravity Sewer Asset Management Plan Risk Scores and Supporting Information

** Lines in RED font have an updated Risk score that is greater that the 2015 GSAMP. Lines highlighted in GREY have "Highest" or "High" priority based or Structural quick rating, and were not included on a prior CIP list.

Pipe ID	VWHA Priority (For Reference Only)	2015 GSAMP Risk Score	2020 Risk Score	On 2016 CIP List	On 2016-17RR List	On CIPPriority 17-18 List	Diameter (in)	Install Date	Length (ft)	CVSan Comments
34-5_27-120		2860	2860				8	1/1/1963	228.9	
35-35_35-36		2860	2860	Yes		Yes	8	1/1/1953	276.4	
44-22_44-21		2860	2860				8	1/1/1979	67.2	
42-57_42-56		2856	2856				8	1/1/1990	298.5	
12-49_13-8		2852	2852	Yes			8	1/1/1944	200.1	
17-62_9-95		2852	2852				8	1/1/1952	222.2	
21-95_21-116		2852	2852				6	1/1/1944	451.2	
23-73_23-71		2852	2852				8	1/1/1962	282.8	
25-18_26-59		2852	2852				8	1/1/1985	96.0	
28-80_28-81		2852	2852				6	1/1/1944	439.0	
29-42_29-40		2852	2852				6	1/1/1944	499.7	
36-22R_36-24		2852	2852				8	1/1/1965	172.7	
9-100R_9-97		2852	2852				8	1/1/1952	185.6	
20-64_20-65		2848	2848				15	1/1/1959	168.4	
42-7_42-6		2840	2840				8	1/1/1960	243.4	
20-33_20-43		2816	2816			Yes	6	1/1/1944	72.1	
27-71_27-70		2816	2816				6	1/1/1944	297.0	
27-70_27-66		2812	2812				8	1/1/2000	317.9	
30-109_30-85		2812	2812				18	1/1/1982	500.2	
21-12_21-19		2808	2808			Yes	8	1/1/1944	446.9	
24-12R_24-11		2808	2808				8	1/1/1944	322.1	
29-25_29-26		2808	2808				8	1/1/1960	87.9	
29-27_29-28		2808	2808				8	1/1/1957	116.9	
43-25_43-42		2808	2808				8	1/1/1988	258.0	
43-44_43-43		2808	2808				8	1/1/1987	298.5	
19-72_11-52		2800	2800	Yes			6	1/1/1945	610.1	
23-28R_23-29		2800	2800	Yes			6	1/1/1948	267.3	
29-11_29-10		2800	2800			Yes	6	1/1/1944	491.5	
29-23_29-22		2800	2800			Yes	8	1/1/1950	291.6	
29-6_29-4		2800	2800				8	1/1/1950	368.0	
32-48_32-36		2800	2800				8	1/1/1971	142.9	
41-14_41-13		2800	2800				14	1/1/1965	143.6	
41-15_41-14		2800	2800				12	1/1/1965	46.6	
41-16_41-15		2800	2800				12	1/1/1965	217.0	
42-11_42-8		2800	2800				8	1/1/1960	132.3	
45-7_41-16		2800	2800				10	1/1/1965	195.9	
10-57_10-56		2790	2790				8	1/1/1952	118.1	
23-40_23-39		2790	2790				8	1/1/1962	13.1	
23-60R_23-99		2790	2790				6	1/1/1944	258.9	
9-45_9-44		2790	2790				8	1/1/1952	145.0	
29-51_29-84		2788	2788				6	1/1/1962	260.0	
14-34_14-35		2760	2760				6	1/1/1946	432.5	
32-6_32-5		2760	2760				6	1/1/1953	157.5	
34-48_34-47		2760	2760				8	1/1/1955	237.7	
34-50_34-47		2760	2760				8	1/1/1955	252.6	
13-39_13-40		2744	2744				6	1/1/1947	217.4	
11-16_11-17		2730	2730			Yes	12		431.2	
14-35_14-36		2730	2730				6	1/1/1946	282.2	
20-57_20-58		2730	2730				15	1/1/1953	464.8	
21-61R_21-60		2730	2730				6	1/1/1947	328.3	
21-66_21-63		2730	2730				21	1/1/1953	118.4	
22-105_22-107		2730	2730				24	1/1/1965	138.4	
22-127_22-66		2730	2730				30	1/1/1965	503.8	
22-132_23-7		2730	2730				6		278.3	
22-133_22-132		2730	2730				6		222.8	
22-92_22-105		2730	2730				24	1/1/1965	143.2	
29-28_30-6		2730	2730				8	1/1/1957	271.6	
30-77_30-78		2730	2730				15	1/1/1966	94.5	
37-23_37-3		2730	2730				6	1/1/1944	360.7	
20-19_20-18		2720	2720				6	1/1/1952	320.1	
22-139_22-138		2720	2720				6	1/1/1965	194.1	
29-13_20-17		2720	2720				8	1/1/1955	421.3	
36-77R_36-43		2714	2714				8		431.2	
11-52_12-109		2706	2706	Yes			6	1/1/1945	283.4	
30-41_30-80		2706	2706			Yes	10	1/1/1953	453.8	
10-50_10-49		2704	2704				8	1/1/1959	272.2	
31-84_31-85		2704	2704	Yes			8	1/1/1949	257.3	
36-30_36-44		2704	2704				8	1/1/1961	122.6	
10-17_10-18		2700	2700				8	1/1/1952	339.8	
29-102_29-69		2700	2700				10	1/1/1958	158.2	
30-45_30-46		2698	2698				15	1/1/1964	142.1	
18-19_27-69		2688	2688				8	1/1/1945	267.0	

Table 4

Updated Gravity Sewer Asset Management Plan Risk Scores and Supporting Information

** Lines in RED font have an updated Risk score that is greater that the 2015 GSAMP. Lines highlighted in GREY have "Highest" or "High" priority based or Structural quick rating, and were not included on a prior CIP list.

Pipe ID	VWHA Priority (For Reference Only)	2015 GSAMP Risk Score	2020 Risk Score	On 2016 CIP List	On 2016-17RR List	On CIPPriority 17-18 List	Diameter (in)	Install Date	Length (ft)	CVSan Comments
30-62_30-93		2688	2688			Yes	8	1/1/1944	21.3	
31-9_31-8		2688	2688				8	1/1/1981	153.3	
47-28_47-29		2688	2688				8	1/1/1980	159.0	
47-30_47-31		2688	2688				8	1/1/1980	299.4	
31-102R_31-101		2684	2684				6	1/1/1948	233.8	
12-62_12-63		2668	2668				12	1/1/1952	17.9	
18-30_19-26		2666	2666				6	1/1/1944	441.9	
22-112_22-111		2666	2666	Yes			6	1/1/1947	423.4	
22-118_22-117		2666	2666				6	1/1/1948	416.4	
22-55_22-54		2666	2666		Yes	Yes	6	1/1/1947	319.1	
22-73_22-72		2666	2666				6	1/1/1947	417.3	
22-75_22-74		2666	2666	Yes			6	1/1/1947	165.9	
22-76_22-75		2666	2666	Yes			6	1/1/1947	87.9	
22-77_22-76		2666	2666				6	1/1/1947	375.8	
22-80_22-81		2666	2666			Yes	6	1/1/1947	427.9	
22-81_22-82		2666	2666	Yes		Yes	6	1/1/1947	421.8	
23-10_23-9		2666	2666	Yes			6	1/1/1948	270.1	
23-11_23-10		2666	2666	Yes			6	1/1/1948	515.0	
23-26_23-27		2666	2666	Yes			6	1/1/1948	274.3	
35-55R_35-54		2666	2666				8	1/1/1945	196.3	
8-12_8-11		2666	2666	Yes			8	1/1/1966	105.7	
22-52_22-56		2660	2660				6	1/1/1947	98.3	
22-69R_22-88		2660	2660				6		307.2	
22-6R_22-7		2660	2660				8	1/1/1951	290.1	
22-89_22-88		2660	2660				6	1/1/1942	159.6	
35-50_35-49		2660	2660	Yes			8	1/1/1953	151.7	
42-54_42-30		2660	2660				15	1/1/1980	160.2	
45-14_45-27		2660	2660				10	1/1/1979	92.9	
14-46_14-16		2652	2652				8	1/1/1984	245.8	
35-52_35-53		2652	2652				8	1/1/1953	18.8	
12-75_12-76		2646	2646				8	1/1/1954	79.9	
31-81R_31-82		2646	2646	Yes			6	1/1/1949	118.7	
42-74_43-34		2646	2646				8	1/1/1969	129.5	
20-43_20-82		2640	2640			Yes	8	1/1/1944	81.5	
27-116_28-15		2640	2640				8	1/1/1953	70.0	
28-17_28-16		2640	2640				6	1/1/1944	138.5	
33-12_33-13		2640	2640				8	1/1/1979	290.4	
33-20_33-21		2640	2640				8	1/1/1979	322.2	
33-21_33-22		2640	2640				8	1/1/1979	298.1	
44-25_44-26		2640	2640				8	1/1/1979	142.4	
35-54_35-53		2624	2624				8	1/1/1945	95.8	
3-87_3-38		2624	2624				8	1/1/1956	110.2	
47-7_47-8		2622	2622				8	1/1/1979	253.0	
62-13_62-12		2622	2622				8	1/1/1979	213.8	
12-52_12-50		2600	2600				21	1/1/1965	385.5	
12-56_12-52		2600	2600				21	1/1/1965	454.3	
34-27_34-26		2600	2600	Yes			8	1/1/1954	123.6	
22-109_23-3		2590	2590				6	1/1/1951	347.1	
32-38_32-21		2590	2590				6	1/1/1949	87.9	
13-46_13-48		2584	2584				15	1/1/1955	15.9	
13-69_13-68		2584	2584				6	1/1/1940	505.8	
20-39_20-40		2584	2584				6	1/1/1944	473.3	
29-106_29-97		2584	2584				12	1/1/1966	72.2	
29-21_20-42		2584	2584				8	1/1/1949	438.9	
29-22_20-41		2584	2584	Yes		Yes	8	1/1/1950	320.3	
30-61_30-59		2584	2584				6	1/1/1944	294.0	
29-31R_29-94		2576	2576				6		40.5	
34-32R_34-33		2576	2576			Yes	8	1/1/1954	125.7	
37-114R_37-6		2576	2576				6	1/1/1948	94.7	
37-83_37-84		2576	2576				18	1/1/1982	486.3	
23-63_23-65		2574	2574				6	1/1/1947	65.5	
26-7_26-8		2574	2574				8	1/1/1960	125.5	
34-30R_34-29		2574	2574				6	1/1/1954	184.4	
35-76_36-10		2574	2574				6		240.4	
36-10_36-9		2574	2574				6		26.0	
23-44R_23-43		2562	2562				8		165.3	
42-56_42-67		2562	2562				8	1/1/1990	108.4	
13-51_13-99		2560	2560			Yes	6		307.2	
23-115Y_24-9		2560	2560				8	1/1/1944	295.9	
28-72_28-73		2560	2560				6	1/1/1944	454.7	
29-7_29-107R		2560	2560	Yes		Yes	6	1/1/1948	153.9	
30-3_29-23		2560	2560			Yes	6	1/1/1950	196.7	

Table 4

Updated Gravity Sewer Asset Management Plan Risk Scores and Supporting Information

** Lines in RED font have an updated Risk score that is greater that the 2015 GSAMP. Lines highlighted in GREY have "Highest" or "High" priority based or Structural quick rating, and were not included on a prior CIP list.

Pipe ID	VWHA Priority (For Reference Only)	2015 GSAMP Risk Score	2020 Risk Score	On 2016 CIP List	On 2016-17RR List	On CIPPriority 17-18 List	Diameter (in)	Install Date	Length (ft)	CVSan Comments
32-40_32-41		2560	2560	Yes			6	1/1/1949	212.4	
12-45_20-64		2548	2548				8	1/1/1956	339.9	
14-32R_14-31		2548	2548				6	1/1/1946	67.0	
20-10_20-9		2548	2548				12	1/1/1953	378.6	
20-11_20-21		2548	2548				12	1/1/1953	221.2	
20-50_20-45		2548	2548				6	1/1/1944	253.2	
20-63R_20-77		2548	2548				6	1/1/1944	77.5	
20-77_20-66		2548	2548				6	1/1/1944	385.4	
20-78_20-77		2548	2548				8	1/1/1984	331.5	
20-9_20-7		2548	2548			Yes	12	1/1/1953	390.9	
21-89_21-97		2548	2548				8	1/1/1947	309.4	
21-97_21-96		2548	2548				8	1/1/2010	324.1	
28-2_27-117		2548	2548				8	1/1/1953	444.7	
34-28_34-27		2548	2548	Yes			8	1/1/1954	232.5	
35-31_35-32		2548	2548				8	1/1/1953	69.5	
36-27_36-29		2548	2548				8	1/1/1958	156.9	
30-39_30-41		2542	2542	Yes		Yes	10	1/1/1953	336.6	
35-58_36-3		2542	2542				6	1/1/1944	509.9	
8-2_8-1		2542	2542				8	1/1/1959	222.1	
8-3_8-2		2542	2542				8	1/1/1959	167.1	
11-17_11-18		2530	2530			Yes	12	1/1/1952	55.4	
11-18_11-19		2530	2530			Yes	12	1/1/1954	24.0	
17-72_26-13		2530	2530	Yes			8	1/1/1944	291.4	
21-119_21-76		2530	2530				6	1/1/1947	130.9	
46-7_PS7		2530	2530				8		37.5	
30-8_30-77		2528	2528				15	1/1/1966	228.1	
30-94_30-8		2528	2528				15	1/1/1992	74.0	
5-63_5-79		2528	2528			Yes	8	1/1/1955	337.2	
13-18_13-38		2520	2520				12	1/1/1950	355.3	
19-34_19-33		2520	2520				8	1/1/1955	126.9	
45-2_46-19		2520	2520				8	1/1/1981	226.5	
61-1_45-2		2520	2520				8	1/1/1981	224.3	
62-41_62-40		2520	2520				8		170.0	
62-42_62-41		2520	2520				8		208.4	
62-43_62-42		2520	2520				8		114.5	
62-44_62-43		2520	2520				8		277.2	
71-24_71-23		2520	2520				8		301.2	
71-25_71-24		2520	2520				8		205.3	
13-6_13-17		2508	2508				6	1/1/1947	385.5	
13-6_13-5		2508	2508				12		25.6	
34-62_34-57		2508	2508				10	1/1/1979	309.3	
34-64_34-63		2508	2508				10	1/1/1979	280.1	
47-31_47-32		2508	2508				8	1/1/1980	195.8	
63-29_63-28		2508	2508				8	1/1/1979	294.5	
63-31_63-30		2508	2508			Yes	8	1/1/1979	262.8	
10-26_10-25		2496	2496				6	1/1/1944	413.5	
14-4_14-51		2496	2496				8	1/1/1953	254.7	
14-45_14-44		2496	2496				8	1/1/1977	187.7	
14-8R_14-7		2496	2496				6	1/1/1946	131.7	
17-17_17-16		2496	2496				6	1/1/1944	373.2	
17-67_17-1		2496	2496				8	1/1/1952	197.4	
20-36_21-9		2496	2496				6	1/1/1948	252.0	
21-108_21-107		2496	2496				24	1/1/2010	300.0	
21-109_21-108		2496	2496				24	1/1/2010	307.5	
21-10R_21-9		2496	2496				6	1/1/1948	82.1	
21-52R_21-51		2496	2496				8	1/1/1953	252.3	
22-114_22-113		2496	2496				6		339.6	
23-112R_23-111		2496	2496				6	1/1/1944	163.6	
26-1R_26-2		2496	2496				6	1/1/1973	375.7	
28-6R_28-7		2496	2496				6	1/1/1948	173.8	
31-117R_31-80		2496	2496	Yes			8	1/1/1949	235.4	
31-80_31-79		2496	2496				8	1/1/1949	413.5	DP 95 Replaced
34-74_35-19		2496	2496				8	1/1/1953	378.5	
36-33R_36-34		2496	2496				8	1/1/1960	106.4	
36-52_29-85		2496	2496				6	1/1/1950	333.4	
41-6_41-7		2496	2496				8	1/1/1960	293.8	
44-43_44-45		2496	2496				8	1/1/1985	295.0	
14-26R_14-25		2484	2484				6	1/1/1971	216.7	
22-93R_22-92		2484	2484				6	1/1/1942	101.2	
34-53_35-11		2484	2484				8	1/1/1955	234.0	
35-74R_35-73		2484	2484				8	1/1/1952	429.6	
36-46_36-47		2484	2484				6	1/1/1944	97.6	

Table 4

Updated Gravity Sewer Asset Management Plan Risk Scores and Supporting Information

** Lines in RED font have an updated Risk score that is greater that the 2015 GSAMP. Lines highlighted in GREY have "Highest" or "High" priority based or Structural quick rating, and were not included on a prior CIP list.

Pipe ID	VWHA Priority (For Reference Only)	2015 GSAMP Risk Score	2020 Risk Score	On 2016 CIP List	On 2016-17RR List	On CIPPriority 17-18 List	Diameter (in)	Install Date	Length (ft)	CVSan Comments
63-23_63-22		2484	2484				8	1/1/1983	170.7	
19-4_19-5		2480	2480				6	1/1/1949	170.8	
19-81_19-80		2480	2480				8	1/1/1956	129.7	
23-105_23-115Y		2480	2480				8	1/1/1944	116.0	
23-24R_23-25		2480	2480				6	1/1/1948	243.6	
23-25_23-26		2480	2480	Yes			6	1/1/1948	261.8	
25-17_26-59		2480	2480				8	1/1/1985	255.3	
32-41_32-38		2480	2480	Yes			6	1/1/1949	123.2	
40-59_40-60		2480	2480	Yes			8	1/1/1964	97.2	
10-30_10-31		2478	2478				10	1/1/1952	204.4	
10-32_10-33		2478	2478				10	1/1/1952	24.2	
21-3_21-5		2478	2478				6	1/1/1950	26.2	
31-91_31-108		2478	2478				6		53.6	
42-44_42-43		2478	2478				8	1/1/1962	357.4	
62-15_62-23		2478	2478				8	1/1/1979	201.0	
31-3_31-2		2470	2470				21	1/1/1966	280.6	
37-90_37-109		2470	2470				18	1/1/1982	486.1	
5-77_5-64		2470	2470			Yes	8	1/1/1955	297.2	
8-4_8-3		2460	2460				8	1/1/1959	215.5	
9-63_9-62		2460	2460				8	1/1/1957	126.6	
21-94_22-129		2450	2450			Yes	8	1/1/1961	121.3	
41-4_41-5		2450	2450				8	1/1/1960	350.3	
42-43_36-77		2450	2450				8	1/1/1962	335.4	
12-13_12-14		2432	2432				12	1/1/1977	151.0	
20-8_20-80		2432	2432				15	1/1/1986	121.2	
29-97_29-95		2432	2432				12	1/1/1980	338.0	
18-116_18-125		2430	2430			Yes	8	1/1/1955	253.3	
19-9_19-77		2430	2430				8	1/1/1955	577.4	
55-19_44-25		2420	2420				8	1/1/1979	356.3	
11-100_11-119		2418	2418				8	1/1/2008	154.2	
11-115R_11-85		2418	2418				8	1/1/1954	200.8	
20-48_20-47		2418	2418				8	1/1/1954	382.4	
23-109_23-110		2418	2418				6	1/1/1944	325.1	
23-62R_23-80		2418	2418				6	1/1/1947	287.2	
27-5_27-105		2418	2418	Yes			6	1/1/1944	422.5	
27-93R_27-92		2418	2418				8	1/1/1952	132.0	
31-48R_31-78		2418	2418	Yes			8	1/1/1949	200.0	
36-83_29-104		2418	2418				6	1/1/1947	259.7	
40-34_40-35		2418	2418				8	1/1/1978	314.9	
5-70_5-50		2418	2418				8	1/1/1954	299.5	
37-89_37-90		2408	2408				18	1/1/1982	320.1	
13-5_13-97		2400	2400				12	1/1/1965	30.4	
20-61_20-62		2400	2400				15	1/1/1959	12.9	
26-59_26-57		2400	2400				8	1/1/1985	349.3	
10-110_10-130		2392	2392				6	1/1/1987	265.2	
11-79_11-80		2392	2392				8	1/1/1958	322.2	
12-110_12-49		2392	2392				8	1/1/1996	277.5	
14-25_14-27		2392	2392				8	1/1/1985	205.4	
14-29_14-28		2392	2392				6	1/1/1946	253.9	
15-2_23-123		2392	2392				6	1/1/1947	222.1	
17-1_17-61		2392	2392				8	1/1/1952	383.6	
17-58_17-62		2392	2392				8	1/1/1952	347.5	
17-61_9-105		2392	2392				8	1/1/1952	229.5	
19-49R_19-41		2392	2392				6	1/1/1944	192.6	
20-46_20-45		2392	2392				8	1/1/1954	254.4	
21-9_21-7		2392	2392				8	1/1/1948	251.7	
23-30R_23-32		2392	2392	Yes			8	1/1/1948	143.7	
26-26_26-68		2392	2392				8	1/1/1949	304.9	
26-27_26-71		2392	2392				8	1/1/1964	205.4	
26-68_27-3		2392	2392				8	1/1/1949	247.8	
26-71_26-26		2392	2392				8	1/1/1964	141.0	
28-98_29-6		2392	2392				8	1/1/1974	222.6	
29-26_29-28		2392	2392				8	1/1/1957	274.6	
29-41R_29-40		2392	2392				6	1/1/1944	163.9	
31-106_31-8		2392	2392	Yes			8	1/1/1954	233.7	
34-52R_34-53		2392	2392				8	1/1/1955	97.5	
35-11_35-10		2392	2392				8	1/1/1955	124.7	
35-12_35-11		2392	2392				8	1/1/1955	388.0	
35-75_35-76		2392	2392				6		50.9	
35-79_35-80		2392	2392				8	1/1/1975	43.0	
36-21R_36-20		2392	2392				8	1/1/1966	174.7	
36-64_36-63		2392	2392				8	1/1/1965	175.7	

Table 4

Updated Gravity Sewer Asset Management Plan Risk Scores and Supporting Information

** Lines in RED font have an updated Risk score that is greater that the 2015 GSAMP. Lines highlighted in GREY have "Highest" or "High" priority based or Structural quick rating, and were not included on a prior CIP list.

Pipe ID	VWHA Priority (For Reference Only)	2015 GSAMP Risk Score	2020 Risk Score	On 2016 CIP List	On 2016-17RR List	On CIPPriority 17-18 List	Diameter (in)	Install Date	Length (ft)	CVSan Comments
37-5R_37-4		2392	2392	Yes			6	1/1/1948	175.8	
37-7R_37-6		2392	2392	Yes			6	1/1/1948	367.0	
42-39_42-38		2392	2392				8	1/1/1964	286.1	
62-27_62-26		2392	2392				8	1/1/1987	276.2	
62-27_62-28		2392	2392				8	1/1/1987	392.5	
9-105_9-104		2392	2392				8	1/1/1952	144.7	
20-16_20-17		2380	2380			Yes	6	1/1/1948	275.9	
21-22_21-23		2380	2380	Yes			6	1/1/1944	205.5	
30-69_30-68		2380	2380			Yes	8	1/1/1954	391.0	
31-114_31-9		2378	2378				8	1/1/1981	136.8	
37-74_37-73		2376	2376				12	1/1/1969	265.3	
43-55_37-74		2376	2376				8	1/1/1969	305.8	
43-6_43-11		2376	2376				8	1/1/1969	79.1	
22-9_22-10		2368	2368				15	1/1/1982	99.5	
30-80_30-54		2368	2368				15	1/1/1953	297.9	
10-104_10-115		2356	2356			Yes	8	1/1/1951	119.9	
10-115_3-62		2356	2356			Yes	8	1/1/1951	124.9	
10-87R_10-104		2356	2356			Yes	8	1/1/1954	56.1	
12-59R_12-60		2356	2356			Yes	6	1/1/1952	472.9	
21-48_21-47		2356	2356			Yes	6	1/1/1944	187.1	
22-116_23-5		2356	2356				6		114.2	
22-30R_22-31		2356	2356				6	1/1/1943	264.7	
22-31_22-32		2356	2356				6	1/1/1944	271.8	
22-32_22-59		2356	2356				6	1/1/1943	347.4	
22-54_22-53		2356	2356			Yes	6	1/1/1947	242.2	
22-59_22-58		2356	2356				6	1/1/1943	139.8	
23-12R_23-14		2356	2356				6	1/1/1947	166.4	
27-41_27-40		2356	2356			Yes	6	1/1/1948	70.6	
27-47R_27-46		2356	2356				6	1/1/1948	162.8	
27-48R_27-46		2356	2356				6	1/1/1948	167.0	
28-68_28-69		2356	2356				6	1/1/1945	410.5	
31-57R_31-58		2356	2356	Yes			8	1/1/1954	77.0	
32-12_32-13		2356	2356	Yes			8	1/1/1952	167.9	
32-16_32-17		2356	2356				8		27.7	
3-6R_3-5		2356	2356			Yes	6	1/1/1952	125.4	
9-27R_9-29		2356	2356				8	1/1/1954	220.2	
9-28R_9-29		2356	2356				8	1/1/1954	95.3	
12-93_12-94		2352	2352				6	1/1/1944	46.2	
42-29_42-54		2352	2352				15	1/1/1980	111.6	
14-38_22-24		2346	2346				8	1/1/1984	223.4	
4-16_14-54		2346	2346				8		142.2	
10-16_10-22		2340	2340				8	1/1/1952	430.0	
10-58_10-57		2340	2340	Yes			8	1/1/1952	175.1	
12-72_12-71		2340	2340				10	1/1/1954	83.2	
12-76_12-72		2340	2340				10	1/1/1954	185.3	
14-51_14-5		2340	2340				8	1/1/1953	249.7	
14-6_14-5		2340	2340				6	1/1/1946	36.8	
17-21_17-16		2340	2340				8	1/1/1961	333.7	
18-115_19-8		2340	2340				8	1/1/1955	414.2	
18-17_18-18		2340	2340				8	1/1/1952	212.9	
19-17_19-16		2340	2340				6	1/1/1952	223.7	
19-57_19-58		2340	2340				8		74.2	
19-58_19-59		2340	2340				8	1/1/1949	393.4	
19-59_20-5		2340	2340				8	1/1/1949	391.8	
19-71_20-2		2340	2340				8	1/1/1955	429.6	
19-95_19-71		2340	2340				8	1/1/1984	303.1	
20-32_20-89		2340	2340				6	1/1/1944	153.1	
20-34R_20-89		2340	2340				6	1/1/1967	316.7	
23-5_23-6		2340	2340				8	1/1/1955	24.2	
27-112_28-5		2340	2340				6	1/1/1948	83.1	
28-39_28-104		2340	2340				10	1/1/1953	388.8	
31-44_31-43		2340	2340				8	1/1/1948	269.3	
34-29_34-28		2340	2340	Yes			8	1/1/1954	233.4	
36-32R_36-30		2340	2340				8	1/1/1961	39.1	
36-65R_36-64		2340	2340				8	1/1/1965	268.2	
40-2_40-3		2340	2340				8	1/1/1960	319.6	
41-7_41-8		2340	2340			Yes	8	1/1/1960	209.7	
4-49_4-48		2340	2340			Yes	6	1/1/1944	355.1	
9-121_9-42		2340	2340				8	1/1/1979	231.8	
9-42_10-16		2340	2340				8	1/1/1952	326.4	
10-19_10-20		2310	2310				8	1/1/1952	434.1	
12-65_12-96		2310	2310				12	1/1/1980	264.2	

Table 4

Updated Gravity Sewer Asset Management Plan Risk Scores and Supporting Information

** Lines in RED font have an updated Risk score that is greater that the 2015 GSAMP. Lines highlighted in GREY have "Highest" or "High" priority based or Structural quick rating, and were not included on a prior CIP list.

Pipe ID	VWHA Priority (For Reference Only)	2015 GSAMP Risk Score	2020 Risk Score	On 2016 CIP List	On 2016-17RR List	On CIPPriority 17-18 List	Diameter (in)	Install Date	Length (ft)	CVSan Comments
13-21_13-20		2310	2310				6	1/1/1950	255.5	
19-109_19-104		2310	2310				16		36.0	
19-33_19-32		2310	2310				8	1/1/1955	153.2	
19-97_19-98		2310	2310				6	1/1/1967	19.7	
26-16R_26-15		2310	2310				8	1/1/1952	93.6	
28-16_28-14		2310	2310				8	1/1/2000	174.4	
28-96_29-29		2310	2310				12	1/1/1993	358.5	
29-29_29-30		2310	2310				12	1/1/1944	551.5	
29-30_29-86		2310	2310				12	1/1/1966	315.7	
30-37_30-42		2310	2310				15	1/1/1964	302.4	
55-17_55-16		2310	2310				8	1/1/1979	226.8	
62-49_62-47		2310	2310				8		124.8	
14-31_14-30		2300	2300				6	1/1/1946	283.1	
10-119_10-120		2294	2294				6		152.9	
11-116_11-44		2294	2294			Yes	8	1/1/1962	268.5	
19-1_19-3		2294	2294				6	1/1/1949	61.5	
19-2R_19-7		2294	2294				8	1/1/1956	178.4	
19-3_19-4		2294	2294				6	1/1/1949	89.0	
22-117_22-116		2294	2294				6	1/1/1948	365.6	
22-60_22-94		2294	2294				6	1/1/1943	178.9	DP 95 Replaced
23-120R_23-119		2294	2294	Yes		Yes	6	1/1/1947	43.1	
27-38R_27-37		2294	2294	Yes			6	1/1/1948	264.8	
44-69_44-67		2294	2294	Yes	Yes		8	1/1/1988	234.5	
9-30_9-31		2294	2294				8	1/1/1954	234.9	
9-84_9-83		2294	2294				8	1/1/1955	152.9	
18-120_27-66		2288	2288				6	1/1/1971	220.5	
20-42_20-41		2288	2288			Yes	6	1/1/1944	144.2	
46-19_46-11		2280	2280			Yes	8	1/1/1981	118.0	
61-4_61-2		2280	2280				8	1/1/1981	162.8	
29-24_29-26		2268	2268				8	1/1/1960	252.9	
40-14_40-13		2250	2250				8	1/1/1964	329.5	
21-20_21-22		2244	2244				6	1/1/1944	162.6	
21-24_21-25		2244	2244				6	1/1/1944	453.7	
21-90_21-71		2244	2244				18	1/1/1953	218.9	
63-32_63-31		2242	2242			Yes	8	1/1/1979	308.0	
18-6_18-9		2240	2240				8	1/1/1954	309.1	
22-129_22-7		2240	2240			Yes	8	1/1/1961	221.8	
22-83_22-84		2240	2240				6	1/1/1947	117.6	
29-49R_29-84		2240	2240				6	1/1/1946	145.6	
34-11_27-116		2240	2240				8	1/1/1953	82.6	
42-63_42-62		2240	2240				8		88.1	
42-87_42-92		2240	2240				8		97.0	
35-13_35-12		2226	2226				8	1/1/1963	128.0	
22-38_22-37		2214	2214				6	1/1/1966	166.1	
22-58_22-57		2214	2214				15	1/1/1948	155.3	
9-62_9-61		2214	2214				8	1/1/1957	237.5	
30-78_30-114		2210	2210				15	1/1/1966	112.2	
10-33_10-34		2208	2208				10	1/1/1952	218.4	
12-18_12-23		2208	2208				12	1/1/1977	320.6	
20-80_20-27		2208	2208				15	1/1/1953	260.3	
29-86_29-33		2208	2208				12	1/1/1977	200.4	
44-16_44-15		2208	2208				8	1/1/1985	95.1	
45-10_45-9		2208	2208				8	1/1/1980	748.4	
47-42_47-41		2208	2208			Yes	8	1/1/1980	267.9	
47-42_47-43		2208	2208			Yes	8	1/1/1980	280.9	
62-24_62-25		2208	2208				8	1/1/1979	200.4	
62-25_62-26		2208	2208				8	1/1/1979	318.2	
63-20_62-57		2208	2208				8	1/1/1979	205.9	
11-62_12-32		2200	2200				12	1/1/1965	269.4	
41-19_45-4		2200	2200				8	1/1/1964	249.9	
8-19_8-18		2200	2200				8	1/1/1959	454.5	
10-36_11-77		2184	2184				8	1/1/1954	243.1	
21-73_21-71		2184	2184			Yes	8	1/1/1955	364.7	
23-80_23-63		2184	2184				6	1/1/1947	283.9	
34-21R_34-22		2184	2184				8	1/1/1955	189.8	
34-22_34-23		2184	2184			Yes	8	1/1/1955	127.0	
34-35_34-34		2184	2184				8	1/1/1955	186.4	
34-36_34-35		2184	2184				8	1/1/1955	137.0	
35-97_35-22		2184	2184				8	1/1/1953	49.2	
42-90_42-87		2184	2184				8		48.7	
43-38_43-39		2184	2184				8		163.1	
20-44R_20-43		2176	2176				6		67.8	

Table 4

Updated Gravity Sewer Asset Management Plan Risk Scores and Supporting Information

** Lines in RED font have an updated Risk score that is greater that the 2015 GSAMP. Lines highlighted in GREY have "Highest" or "High" priority based or Structural quick rating, and were not included on a prior CIP list.

Pipe ID	VWHA Priority (For Reference Only)	2015 GSAMP Risk Score	2020 Risk Score	On 2016 CIP List	On 2016-17RR List	On CIPPriority 17-18 List	Diameter (in)	Install Date	Length (ft)	CVSan Comments
30-1_21-11		2176	2176			Yes	8	1/1/1959	278.0	
11-34R_11-33		2170	2170				6	1/1/1965	156.4	
11-35R_11-34R		2170	2170				6	1/1/1965	103.6	
12-30_12-28		2170	2170	Yes			12	1/1/1952	320.0	
12-42_20-58		2170	2170				6	1/1/1956	222.5	
12-43R_12-42		2170	2170				6	1/1/1966	230.7	
12-97_12-47		2170	2170				12	1/1/1952	63.7	
19-16_19-55		2170	2170				6	1/1/1944	425.7	
27-8_27-7		2170	2170				8	1/1/1960	224.5	
28-12_28-51		2170	2170				10	1/1/1953	129.1	
28-92_28-35		2170	2170				8	1/1/2008	298.8	
40-28_44-8		2170	2170				8	1/1/1964	303.3	
5-45R_5-46		2170	2170				8	1/1/1962	200.4	
9-125_2-20		2170	2170	Yes		Yes	8	1/1/1957	398.6	
10-109_10-108		2160	2160				8	1/1/1980	61.8	
26-58_26-57		2160	2160				8	1/1/1985	329.8	
34-77_34-26		2160	2160				8		84.6	
30-15_30-16		2156	2156				8	1/1/1957	125.1	
30-85_30-123		2156	2156				18	1/1/1982	206.7	
47-24_47-28		2156	2156				8	1/1/1983	269.7	
11-51_11-49		2150	2150			Yes	6	1/1/1944	298.8	
18-103_18-116		2150	2150				6	1/1/1944	478.8	
20-21R_20-20		2150	2150				6		282.2	
21-86R_21-63		2150	2150	Yes			8	1/1/1953	132.1	
22-53_22-52		2150	2150			Yes	6	1/1/1947	115.3	
23-113_23-35		2150	2150				6	1/1/1947	263.7	
28-8_28-9		2150	2150	Yes			8	1/1/1948	264.4	
29-5R_29-4		2150	2150	Yes		Yes	6	1/1/1950	108.6	
31-60_31-118		2150	2150				6		100.0	
25-19_25-18		2142	2142				8	1/1/1990	162.8	
25-20_25-19		2142	2142				8	1/1/1990	214.0	
35-53_35-57		2142	2142	Yes			8	1/1/1953	318.0	
10-54_10-128		2116	2116			Yes	8	1/1/1952	132.9	
14-52_14-22		2116	2116				8		210.9	
14-53_14-52		2116	2116				8		99.2	
14-54_14-53		2116	2116				8		220.6	
43-36_43-37		2116	2116				8		168.7	
19-29_19-36		2112	2112				8	1/1/1998	152.5	
63-28_63-33		2112	2112				8		32.1	
63-30_63-29		2112	2112				8	1/1/1979	234.8	
30-110_30-86		2108	2108				12	1/1/1982	376.3	
31-43_22-138		2108	2108	Yes			8	1/1/1948	348.3	
37-46_37-92		2108	2108				12	1/1/1982	56.4	
10-73R_10-72		2106	2106			Yes	8	1/1/1952	239.2	
14-17_14-54		2106	2106				8	1/1/1975	219.5	
14-22_14-25		2106	2106				8	1/1/1985	153.5	
14-44_14-18		2106	2106				8	1/1/1977	338.5	
21-56R_21-55		2106	2106				6	1/1/1947	229.9	
27-3_27-2		2106	2106				6	1/1/1944	391.7	
36-35R_36-34		2106	2106				8	1/1/1960	208.9	
5-23_5-24		2106	2106				6	1/1/1954	241.9	DP 95 Replaced
9-91_9-90		2106	2106				8	1/1/1952	188.0	
28-75_28-76		2100	2100				10	1/1/1954	270.4	
36-2_36-1		2100	2100				10	1/1/1958	38.4	
41-10_42-14		2100	2100				8	1/1/1960	339.0	
42-14_42-13		2100	2100				8	1/1/1960	118.5	
42-73_42-18		2100	2100				8	1/1/1981	357.1	
5-65R_5-64		2100	2100				8	1/1/1968	228.4	
8-18_8-17		2100	2100				8	1/1/1959	71.1	
19-103_19-107		2090	2090				18		286.9	
26-50_34-1		2090	2090				8	1/1/1978	585.5	
33-10_33-11		2090	2090				8	1/1/1979	168.1	
33-13_33-20		2090	2090				8	1/1/1979	289.4	
33-22_34-71		2090	2090				8	1/1/1979	302.1	
34-71_34-70		2090	2090				8	1/1/1979	292.3	
44-23_44-22		2090	2090				8	1/1/1979	305.1	
62-56_62-13		2090	2090				8	1/1/1979	224.9	
62-57_62-56		2090	2090				8	1/1/1979	203.3	
13-8_13-11		2080	2080				8	1/1/1940	410.5	
13-94_13-93		2080	2080				8	1/1/1989	257.5	
14-10R_14-11		2080	2080				8	1/1/1954	223.1	
14-11_22-130		2080	2080				8	1/1/1953	57.2	

Table 4

Updated Gravity Sewer Asset Management Plan Risk Scores and Supporting Information

** Lines in RED font have an updated Risk score that is greater that the 2015 GSAMP. Lines highlighted in GREY have "Highest" or "High" priority based or Structural quick rating, and were not included on a prior CIP list.

Pipe ID	VWHA Priority (For Reference Only)	2015 GSAMP Risk Score	2020 Risk Score	On 2016 CIP List	On 2016-17RR List	On CIPPriority 17-18 List	Diameter (in)	Install Date	Length (ft)	CVSan Comments
20-56_20-57		2080	2080				15	1/1/1953	170.6	
21-62_22-1		2080	2080				21	1/1/1953	385.2	
21-65R_21-63		2080	2080				8	1/1/1953	207.8	
21-67_21-64		2080	2080				27	1/1/1965	109.2	
23-101_23-105		2080	2080				8	1/1/1944	253.3	
23-31R_23-32		2080	2080				6	1/1/1948	64.2	
23-32_23-54		2080	2080				8	1/1/1948	163.5	
23-54_23-53		2080	2080				8	1/1/1948	201.0	
28-99_28-98		2080	2080				8		116.4	
29-107R_29-8		2080	2080			Yes	6	1/1/1948	111.2	
29-12_29-13		2080	2080			Yes	8	1/1/1955	389.2	
29-17_29-16		2080	2080			Yes	8	1/1/1951	210.4	
29-18R_29-17		2080	2080			Yes	6	1/1/1951	161.4	
29-19_29-20		2080	2080			Yes	8	1/1/1950	105.7	
29-8_29-9		2080	2080			Yes	6	1/1/1948	437.0	
29-92_29-93		2080	2080				8	1/1/1986	122.9	
30-71_30-70		2080	2080			Yes	8	1/1/1954	235.2	
30-72_30-83		2080	2080			Yes	8	1/1/1957	264.3	
31-11R_31-106		2080	2080				6	1/1/1954	23.2	
32-23_32-37		2080	2080	Yes			8	1/1/1955	160.7	
30-123_30-84		2072	2072				18	1/1/1982	202.1	
3-35_3-36		2070	2070			Yes	6	1/1/1944	303.7	
40-21_40-22		2070	2070				8		209.2	
5-59_5-58		2070	2070				8	1/1/1954	133.5	
71-23_62-44		2070	2070				8		406.2	
27-117_27-64		2058	2058	Yes			8	1/1/1953	250.9	
28-62_28-61		2058	2058				6	1/1/1944	185.0	
29-104_29-77		2058	2058				6	1/1/1946	251.2	
35-21_35-22		2058	2058				8	1/1/1953	101.4	
20-41_20-40		2052	2052			Yes	6	1/1/1944	25.2	
40-23_40-17		2050	2050				8	1/1/1964	137.4	
40-60_40-21		2050	2050	Yes			8	1/1/1964	152.0	
20-102_20-101		2048	2048				18		203.1	
21-110_21-109		2048	2048				24	1/1/2010	195.4	
21-111_21-110		2048	2048				24	1/1/2010	195.4	
21-112_21-111		2048	2048				24	1/1/2010	272.5	
21-113_21-112		2048	2048				24	1/1/2010	259.2	
21-114_21-113		2048	2048				24	1/1/2010	274.4	
21-34_21-33		2046	2046				8	1/1/1951	30.5	
21-35_21-34		2046	2046				8	1/1/1951	63.5	
21-47_22-3		2046	2046				6	1/1/1944	445.9	
27-42R_27-41		2046	2046				6	1/1/1948	81.2	
34-14_34-55		2046	2046				8	1/1/1953	152.2	
34-18R_34-16		2046	2046			Yes	8	1/1/1955	74.3	
9-19R_9-18		2046	2046				8	1/1/1952	35.4	
37-72_37-114Y		2040	2040				12	1/1/1970	442.0	
11-82_11-81		2028	2028				8	1/1/1954	186.6	
11-85_11-98		2028	2028				8	1/1/1954	190.1	
12-19_12-18		2028	2028				8	1/1/1962	326.8	
12-73_12-75		2028	2028				6	1/1/1954	186.2	
13-102R_12-45		2028	2028				8	1/1/1955	431.2	
14-40_14-39		2028	2028				8	1/1/1956	64.8	
14-5_14-11		2028	2028				8	1/1/1953	300.0	
15-11_15-9		2028	2028				8	1/1/1962	150.7	
17-57R_17-58		2028	2028				8	1/1/1952	360.7	
18-21_18-22		2028	2028				8	1/1/1959	269.1	
18-25_18-128		2028	2028				8		19.4	
19-20_19-19		2028	2028				6	1/1/1965	213.5	
19-30_19-29		2028	2028				8	1/1/2008	107.9	
19-31_19-30		2028	2028				8	1/1/1953	479.3	
19-35_19-34		2028	2028			Yes	8	1/1/1955	107.8	
19-51_19-56		2028	2028				6	1/1/1944	116.8	
19-52_19-51		2028	2028			Yes	8	1/1/1949	178.1	
19-53_19-52		2028	2028			Yes	8	1/1/1949	470.6	
20-35R_20-36		2028	2028				6	1/1/1948	98.2	
20-37_20-36		2028	2028				6	1/1/1948	287.3	
23-123_23-38		2028	2028				6	1/1/1947	188.6	
23-8_23-6		2028	2028				6	1/1/1948	338.8	
24-10_24-6		2028	2028			Yes	8	1/1/1944	320.2	
26-22_26-21		2028	2028				6	1/1/1944	240.9	
27-64_27-65		2028	2028				8	1/1/1953	234.9	
28-49R_28-50		2028	2028				6	1/1/1953	311.1	

Table 4

Updated Gravity Sewer Asset Management Plan Risk Scores and Supporting Information

** Lines in RED font have an updated Risk score that is greater that the 2015 GSAMP. Lines highlighted in GREY have "Highest" or "High" priority based or Structural quick rating, and were not included on a prior CIP list.

Pipe ID	VWHA Priority (For Reference Only)	2015 GSAMP Risk Score	2020 Risk Score	On 2016 CIP List	On 2016-17RR List	On CIPPriority 17-18 List	Diameter (in)	Install Date	Length (ft)	CVSan Comments
28-66_28-65		2028	2028				6	1/1/1945	152.4	
29-2_29-1		2028	2028	Yes			8	1/1/1950	266.5	
29-99_29-1		2028	2028				8	1/1/1978	185.2	
30-10R_30-11		2028	2028				8	1/1/1951	414.4	
30-24_30-25		2028	2028				6	1/1/1973	108.4	
30-6_30-5		2028	2028				8	1/1/1957	198.0	
31-88_31-105		2028	2028				8	1/1/1949	79.2	
34-46_34-45		2028	2028				8	1/1/1954	119.3	
35-15_35-17		2028	2028				8	1/1/1954	74.9	
35-30R_35-31		2028	2028				8	1/1/1953	239.8	
35-66_35-65		2028	2028				8	1/1/1951	272.7	
36-13_36-14		2028	2028			Yes	8	1/1/1958	128.4	
37-27R_36-83		2028	2028				6	1/1/1946	158.3	
43-5_43-6		2028	2028				8	1/1/1969	386.3	
44-43_44-41		2028	2028				8	1/1/1985	150.4	
44-43_44-42		2028	2028				8	1/1/1985	184.8	
62-21_62-20		2028	2028				8	1/1/1985	163.4	
62-21_62-58		2028	2028				8	1/1/1985	125.3	
12-102_12-93		2024	2024			Yes	8	1/1/1975	135.8	
15-4_15-2		2024	2024				8	1/1/1947	91.9	
29-81R_29-80		2024	2024				6	1/1/1946	68.6	
5-25_12-85		2024	2024				6	1/1/1944	266.0	
10-34_11-76		2016	2016				10	1/1/1952	100.4	
11-44_11-43		2000	2000			Yes	6	1/1/1962	213.9	
13-70_14-47		2000	2000				6	1/1/1940	347.7	
18-24R_18-25		2000	2000	Yes			6	1/1/1944	141.0	
20-20_20-86		2000	2000				8	1/1/1990	88.3	
20-38_20-39		2000	2000			Yes	6	1/1/1944	459.7	
20-75_20-69		2000	2000				6	1/1/1944	112.8	
22-67_22-91		2000	2000				6	1/1/1965	375.6	
27-25_27-23		2000	2000	Yes			6	1/1/1948	241.9	
28-29R_28-28		2000	2000				6	1/1/1972	205.3	
30-4R_30-71		2000	2000			Yes	8	1/1/1954	183.0	
31-76_31-72		2000	2000				6	1/1/1946	423.6	
38-8_31-59		2000	2000				6	1/1/1968	438.8	
4-21R_4-55		2000	2000				6	1/1/1965	272.1	
10-85_10-83		1984	1984			Yes	8	1/1/1954	116.6	
10-97_10-96		1984	1984				8	1/1/1955	171.4	
10-98_10-97		1984	1984				8	1/1/1955	113.8	
10-99_10-98		1984	1984				8	1/1/1955	121.3	
11-31_11-33		1984	1984				6	1/1/1944	160.8	
18-100R_18-99		1984	1984			Yes	8	1/1/1956	172.5	
18-53_19-96		1984	1984				8	1/1/1972	154.6	
20-22_20-94		1984	1984			Yes	8	1/1/1952	26.7	
20-94_20-19		1984	1984				8	1/1/1952	196.4	
27-36_28-8		1984	1984				6	1/1/1948	93.1	
27-37_27-36		1984	1984				6	1/1/1948	193.7	
27-46_27-44		1984	1984				6	1/1/1948	123.8	
27-85_27-82		1984	1984				8	1/1/1956	88.6	
29-56_29-51		1984	1984				6	1/1/1946	287.5	
30-73_30-72		1984	1984				8	1/1/1957	115.6	
40-24_40-23		1984	1984				8	1/1/1964	132.1	
9-21_9-107		1984	1984				8	1/1/1954	132.2	
30-9R_30-8		1980	1980				6	1/1/1966	132.4	
35-80_35-77		1980	1980				8	1/1/1975	253.6	
36-23_36-24		1980	1980	Yes			8	1/1/1966	214.6	
46-10_46-9		1980	1980				8	1/1/1987	328.7	
62-35_62-34		1980	1980				8	1/1/1987	308.3	
22-88_22-87		1960	1960				6	1/1/1942	18.3	
27-15_27-16		1960	1960				8		314.4	
3-34_3-35		1960	1960			Yes	6	1/1/1944	273.9	
35-47_35-48		1960	1960				8	1/1/1953	49.3	
41-5_41-9		1960	1960				8	1/1/1960	349.0	
45-12_45-6		1960	1960				10	1/1/1979	49.7	
45-13_45-12		1960	1960				10	1/1/1979	283.2	
62-45_62-42		1960	1960				8		33.3	
62-46_62-45		1960	1960				8		94.8	
62-47_62-46		1960	1960				8		39.1	
72-13_72-17		1960	1960				8		118.8	
72-14_72-13		1960	1960				8		40.6	
13-19_13-32		1952	1952				8	1/1/1959	287.9	
29-69_29-68		1952	1952				10	1/1/1958	131.5	

Table 4

Updated Gravity Sewer Asset Management Plan Risk Scores and Supporting Information

** Lines in RED font have an updated Risk score that is greater that the 2015 GSAMP. Lines highlighted in GREY have "Highest" or "High" priority based or Structural quick rating, and were not included on a prior CIP list.

Pipe ID	VWHA Priority (For Reference Only)	2015 GSAMP Risk Score	2020 Risk Score	On 2016 CIP List	On 2016-17RR List	On CIPPriority 17-18 List	Diameter (in)	Install Date	Length (ft)	CVSan Comments
42-58_42-57		1952	1952				8	1/1/1990	309.4	
26-29R_26-30		1950	1950				8	1/1/1961	171.5	
26-37_26-36		1950	1950				8	1/1/1961	294.0	
34-38_34-74		1950	1950				8	1/1/1953	132.5	
36-74R_36-9		1950	1950				8	1/1/1956	59.8	
40-3_40-5		1950	1950				8	1/1/1960	224.3	
26-53_26-50		1938	1938				8	1/1/1978	309.3	
26-54_26-53		1938	1938				8	1/1/1978	349.4	
26-55_26-54		1938	1938				8	1/1/1978	322.3	
26-56_26-55		1938	1938				8	1/1/1985	238.9	
26-63_26-54		1938	1938				8	1/1/1979	250.2	
27-127_27-99		1936	1936				6	1/1/1944	91.1	
10-37_10-36		1932	1932				8	1/1/1952	305.7	
11-12_11-14		1932	1932			Yes	12	1/1/1952	35.8	
11-78R_11-77		1932	1932				8	1/1/1954	240.8	
12-14_12-18		1932	1932				12	1/1/1977	177.6	
14-43R_14-42		1932	1932				8	1/1/1963	224.7	
16-11_17-61		1932	1932				8	1/1/1952	401.9	
21-88_21-89		1932	1932				8	1/1/1987	334.6	
22-99R_22-100		1932	1932				8	1/1/1956	223.7	
29-75R_29-74		1932	1932				6	1/1/1950	71.0	
29-98_29-97		1932	1932				8	1/1/1980	132.0	
34-33_34-31		1932	1932				8	1/1/1954	228.8	
34-51R_34-50		1932	1932				6	1/1/1955	57.0	
47-40_47-39		1932	1932				8	1/1/1980	133.1	
62-28_62-29		1932	1932				8	1/1/1987	229.4	
63-27_63-22		1932	1932				8	1/1/1983	207.8	
9-129_9-101		1932	1932				8	1/1/1998	237.5	
9-132R_9-95		1932	1932				8		68.4	
10-93R_10-92		1922	1922				8	1/1/1955	163.8	
11-30_11-31		1922	1922				6	1/1/1944	208.1	
17-43_17-42		1922	1922				8	1/1/1962	143.1	
18-96_18-98		1922	1922			Yes	8	1/1/1952	130.1	
19-5_19-6		1922	1922				8	1/1/2000	24.0	
19-6_19-8		1922	1922				8	1/1/2000	158.1	
19-83_19-82		1922	1922			Yes	8	1/1/1956	195.1	
21-13_21-115		1922	1922			Yes	8	1/1/1960	468.2	
22-113_22-112		1922	1922				6	1/1/1947	430.0	
22-61_22-60		1922	1922				6	1/1/1944	138.0	DP 95 Replaced
22-62R_22-63		1922	1922				6	1/1/1966	168.4	
22-71R_22-72		1922	1922				6		111.1	
22-72_22-70		1922	1922				6	1/1/1947	125.8	
22-94_22-58		1922	1922				15	1/1/1948	300.0	
23-23R_23-22		1922	1922				6	1/1/1947	201.3	
27-104_27-58		1922	1922	Yes		Yes	6	1/1/1944	266.3	
27-88_27-82		1922	1922				8	1/1/1952	359.7	
27-89_27-88		1922	1922				8	1/1/1952	132.3	
29-94_29-32		1922	1922				6	1/1/1986	176.8	
3-16_4-15		1922	1922			Yes	8	1/1/1959	164.7	
3-53R_3-52		1922	1922			Yes	8	1/1/1955	127.5	
43-18_43-15		1922	1922				8	1/1/1968	176.7	
45-26_46-8		1922	1922				8	1/1/1990	559.3	
4-6R_4-7		1922	1922				8	1/1/1962	111.8	
5-14R_5-13		1922	1922				8	1/1/1959	93.4	
5-43_5-48		1922	1922			Yes	8	1/1/1965	180.0	
5-46_5-47		1922	1922	Yes			8	1/1/1962	54.8	
61-17_61-20		1920	1920				8	1/1/1987	137.0	
61-18_61-3		1920	1920				8	1/1/1987	212.7	
61-2_61-1		1920	1920				8	1/1/1981	223.0	
61-20_61-18		1920	1920				8	1/1/1987	104.4	
61-3_61-4		1920	1920				8	1/1/1987	25.1	
13-40_13-41		1904	1904				6	1/1/1947	186.3	
13-44_13-46		1904	1904				8	1/1/1940	54.6	
13-53_13-46		1904	1904				15	1/1/1955	340.9	
13-72_13-66		1904	1904				6	1/1/1940	233.2	
23-115R_23-103		1904	1904			Yes	6	1/1/1944	238.3	
10-86R_10-115		1900	1900				8	1/1/1954	89.3	
11-118_11-3		1900	1900			Yes	6	1/1/1956	218.4	
11-88_11-87		1900	1900				6	1/1/1948	251.8	
12-54R_12-55		1900	1900				6	1/1/1944	367.6	
13-7_13-6		1900	1900				6	1/1/1965	52.8	
17-68_17-14		1900	1900				6		74.8	

Table 4

Updated Gravity Sewer Asset Management Plan Risk Scores and Supporting Information

** Lines in RED font have an updated Risk score that is greater that the 2015 GSAMP. Lines highlighted in GREY have "Highest" or "High" priority based or Structural quick rating, and were not included on a prior CIP list.

Pipe ID	VWHA Priority (For Reference Only)	2015 GSAMP Risk Score	2020 Risk Score	On 2016 CIP List	On 2016-17RR List	On CIPPriority 17-18 List	Diameter (in)	Install Date	Length (ft)	CVSan Comments
18-112_18-108		1900	1900			Yes	8	1/1/1952	207.7	
18-39_18-38		1900	1900				8	1/1/1950	149.4	
18-82_18-117		1900	1900				6	1/1/1950	63.1	
19-12_19-13		1900	1900	Yes		Yes	6		343.1	
20-28_20-29		1900	1900				6	1/1/1944	448.8	
21-59_22-2		1900	1900			Yes	6	1/1/1947	301.4	
22-64_22-94		1900	1900				15		148.1	
22-68_22-89		1900	1900				6	1/1/1942	370.7	
27-113_28-11		1900	1900				6	1/1/1948	88.0	
27-27_27-25		1900	1900				6	1/1/1948	242.6	DP 95 Replaced
27-31_27-27		1900	1900				6	1/1/1948	336.2	DP 95 Replaced
27-45R_27-44		1900	1900				6	1/1/1948	123.2	
27-62_27-61		1900	1900				6	1/1/1944	334.0	
28-106_28-21		1900	1900				6	1/1/1947	220.2	
28-7_28-8		1900	1900				6	1/1/1948	327.9	
29-16_29-19		1900	1900			Yes	8	1/1/1951	293.7	
29-60R_29-61		1900	1900				6	1/1/1950	64.3	
31-32_31-33		1900	1900			Yes	8	1/1/1954	148.4	
31-71R_32-18		1900	1900				6		456.3	
31-75_31-53		1900	1900			Yes	8	1/1/1946	417.6	
31-76_31-77		1900	1900			Yes	6	1/1/1946	436.4	
34-15_34-14		1900	1900			Yes	8	1/1/1955	176.2	
34-16_34-56		1900	1900				8	1/1/1955	108.7	
34-56_34-15		1900	1900				8	1/1/1955	51.5	
37-17_37-19		1900	1900				8	1/1/1952	419.9	
37-20R_30-22		1900	1900				6	1/1/1946	312.0	
38-6_38-8		1900	1900				6	1/1/1968	197.5	
4-18R_4-17		1900	1900				6	1/1/1944	57.5	
4-78R_3-2		1900	1900			Yes	8	1/1/1950	138.5	
10-127_10-126		1892	1892			Yes	12	1/1/2009	280.6	
10-129_10-127		1892	1892				12	1/1/2009	99.9	
10-23_10-129		1892	1892				12	1/1/2009	249.7	
17-15_18-22		1890	1890				8	1/1/1959	252.2	
17-22_17-21		1890	1890				8	1/1/1961	54.0	
18-125_18-115		1890	1890				8	1/1/1995	170.2	
19-73_19-94		1890	1890				8	1/1/1955	194.5	
28-36_28-38		1890	1890				6	1/1/1944	272.2	
31-46_31-45		1890	1890				8	1/1/1948	42.9	
33-19_33-20		1890	1890				8	1/1/1979	214.2	
35-17_35-18		1890	1890				8	1/1/1954	149.3	
35-18_35-21		1890	1890				8	1/1/1954	103.7	
35-57_35-58		1890	1890				6		26.2	
36-34_36-30		1890	1890				8	1/1/1960	197.5	
3-70_3-66		1890	1890			Yes	8	1/1/1961	272.7	
4-48_4-68		1890	1890				6	1/1/1944	381.5	
9-130R_2-19		1890	1890				8	1/1/1961	301.0	
9-51_9-50		1890	1890				8	1/1/1952	219.6	
19-24_19-27		1888	1888				8	1/1/1998	131.4	
35-22_35-32		1888	1888			Yes	8	1/1/1953	320.3	
35-32_35-37		1888	1888				8	1/1/1953	267.1	
35-37_35-36		1888	1888				8	1/1/1953	136.9	
62-26_62-37		1888	1888				8	1/1/1987	339.9	
62-37_62-36		1888	1888				8	1/1/1987	219.7	
63-35_63-30		1888	1888				8	1/1/1979	161.4	
3-62_3-58		1886	1886				8	1/1/1951	149.7	
8-1_9-63		1886	1886				8	1/1/1959	128.1	
34-61_34-60		1872	1872			Yes	8	1/1/1978	353.4	
47-28_47-15		1872	1872			Yes	8	1/1/1980	216.2	
47-37_47-36		1872	1872				8	1/1/1980	271.0	
62-12_62-11		1872	1872				8	1/1/1979	364.7	
11-19_12-31		1870	1870				12	1/1/1954	260.7	
19-107_20-12		1870	1870				18		286.9	
19-110_19-104		1870	1870				16		31.4	
20-105_20-104		1870	1870				18		223.6	
20-12_20-105		1870	1870				18		39.3	
21-105_21-104		1870	1870				24	1/1/2010	95.5	
21-106_21-105		1870	1870				24	1/1/2010	47.6	
21-107_21-106		1870	1870				24	1/1/2010	128.7	
30-105_30-106		1870	1870				24	1/1/1999	340.0	
3-60_3-59		1870	1870				10	1/1/1964	256.0	
34-59_34-73		1862	1862				8	1/1/1978	104.0	
34-73_34-58		1862	1862				8	1/1/1978	175.4	

Table 4

Updated Gravity Sewer Asset Management Plan Risk Scores and Supporting Information

** Lines in RED font have an updated Risk score that is greater that the 2015 GSAMP. Lines highlighted in GREY have "Highest" or "High" priority based or Structural quick rating, and were not included on a prior CIP list.

Pipe ID	VWHA Priority (For Reference Only)	2015 GSAMP Risk Score	2020 Risk Score	On 2016 CIP List	On 2016-17RR List	On CIPPriority 17-18 List	Diameter (in)	Install Date	Length (ft)	CVSan Comments
37-87_37-86		1862	1862				10	1/1/1982	251.5	
47-11_47-7		1862	1862			Yes	8	1/1/1980	250.3	
47-27_47-28		1862	1862			Yes	8	1/1/1980	251.5	
47-3_47-4		1862	1862				8	1/1/1979	214.5	
11-117R_11-115		1860	1860				8	1/1/1956	61.9	
18-57R_18-56		1860	1860	Yes			8	1/1/1972	355.5	
21-36_21-35		1860	1860				8	1/1/1964	49.4	
3-50S_3-87		1860	1860				8	1/1/1956	61.1	
5-68_5-67		1860	1860				6	1/1/1976	155.7	
10-102_10-101		1850	1850				8	1/1/1960	193.0	
10-45_11-89		1850	1850				6	1/1/1954	557.9	
11-47R_11-118		1850	1850				6	1/1/1944	319.8	
1-5_3-7		1850	1850				6	1/1/1953	574.8	
16-9R_16-8		1850	1850				8	1/1/1966	373.7	
17-9_17-10		1850	1850				8	1/1/1950	329.7	
18-119R_18-120		1850	1850				6	1/1/1944	411.2	
18-27_19-35		1850	1850				8	1/1/1955	305.3	
18-32R_18-31		1850	1850				6	1/1/1944	77.3	
18-60R_18-59		1850	1850				6	1/1/1944	240.5	
18-62_18-61		1850	1850				6	1/1/1948	169.7	
18-63_18-62		1850	1850				6	1/1/1948	413.2	
18-67R_18-68		1850	1850				6	1/1/1950	287.8	
18-87_18-86		1850	1850			Yes	8	1/1/1950	244.7	
20-52_20-51		1850	1850				6	1/1/1944	572.9	
22-4_22-16		1850	1850				6	1/1/1948	184.4	
26-51R_27-5		1850	1850	Yes			6	1/1/1944	409.1	
27-13R_27-12		1850	1850				8	1/1/1954	412.0	
27-63R_27-62		1850	1850				6	1/1/1944	314.6	
28-34R_29-44		1850	1850			Yes	6	1/1/1944	341.0	
29-44_29-43		1850	1850			Yes	6	1/1/1944	371.2	
30-34R_30-35		1850	1850				8	1/1/1952	79.7	
32-43R_32-44		1850	1850				6	1/1/1949	90.7	
37-45_37-46		1850	1850				6	1/1/1944	201.3	
45-30_45-29		1850	1850	Yes			8	1/1/1995	494.2	
6-2_13-85		1850	1850				6	1/1/1995	129.0	
9-26_9-20		1850	1850			Yes	8	1/1/1954	178.2	
9-58_9-56		1850	1850				8	1/1/1952	167.1	
9-65_9-64		1850	1850				8	1/1/1957	217.1	
12-7_12-4		1840	1840				8	1/1/1962	131.0	
23-53P_23-58		1840	1840				8	1/1/1944	94.2	
28-94P_28-74		1840	1840				8	1/1/1954	114.8	
29-106R_29-34R		1840	1840				6		92.7	
29-94Y_29-94		1840	1840				6		13.0	
36-11R_36-12		1840	1840				8	1/1/1958	27.4	
42-9_42-8		1840	1840				8	1/1/1964	45.4	
14-50R_13-70		1836	1836				6	1/1/1940	363.6	
37-73_37-113		1836	1836				12	1/1/1969	256.8	
43-11_43-25		1836	1836				8	1/1/1967	319.3	
43-43_43-7		1836	1836				12	1/1/1969	41.4	
12-109_12-41		1820	1820				6	1/1/1956	143.9	
12-28_12-27		1820	1820				12	1/1/1952	262.2	
12-31_12-30		1820	1820				12	1/1/1954	121.5	
12-44R_20-59		1820	1820				8	1/1/1951	363.9	
12-53R_12-42		1820	1820				6	1/1/1944	158.7	
12-67_12-65		1820	1820			Yes	10	1/1/1954	152.2	
19-79_11-91		1820	1820				8	1/1/1950	301.6	
19-80_19-79		1820	1820				8	1/1/1956	97.6	
20-1_12-41		1820	1820				8	1/1/1956	435.9	
21-31_21-93		1820	1820				8	1/1/1961	83.0	
21-93_21-94		1820	1820				8	1/1/1961	265.3	
22-7_22-14		1820	1820			Yes	8	1/1/1961	161.6	
28-35_28-36		1820	1820				8	1/1/2009	171.7	
28-77_28-76		1820	1820				6		82.4	
3-38_3-37		1820	1820				8	1/1/1956	31.0	
4-38_5-77		1820	1820			Yes	8	1/1/1955	277.8	
4-42_4-38		1820	1820			Yes	8	1/1/1955	110.6	
9-124_9-125		1820	1820				8	1/1/1957	97.1	
8-9_8-8		1804	1804				8	1/1/1959	175.0	
12-12_12-10		1800	1800				8	1/1/1964	39.6	
40-13_41-22		1800	1800				8	1/1/1964	326.4	
40-15_40-14		1800	1800				8	1/1/1964	326.7	
40-16_40-15		1800	1800				8	1/1/1964	326.3	

Table 4

Updated Gravity Sewer Asset Management Plan Risk Scores and Supporting Information

** Lines in RED font have an updated Risk score that is greater that the 2015 GSAMP. Lines highlighted in GREY have "Highest" or "High" priority based or Structural quick rating, and were not included on a prior CIP list.

Pipe ID	VWHA Priority (For Reference Only)	2015 GSAMP Risk Score	2020 Risk Score	On 2016 CIP List	On 2016-17RR List	On CIPPriority 17-18 List	Diameter (in)	Install Date	Length (ft)	CVSan Comments
40-17_40-16		1800	1800				8	1/1/1964	207.2	
40-18_40-17		1800	1800				8	1/1/1964	115.2	
40-22_40-18		1800	1800				8	1/1/1964	212.7	
41-20_41-19		1800	1800				8	1/1/1964	332.6	
41-21_41-20		1800	1800				8	1/1/1964	216.8	
41-22_41-21		1800	1800				8	1/1/1964	216.5	
12-77_12-79		1794	1794				8		409.9	
24-7R_23-109		1794	1794				6	1/1/1944	181.7	
24-8R_24-10		1794	1794				6	1/1/1944	290.4	
34-39R_34-38		1794	1794				8		11.8	
43-27R_43-39		1794	1794				0		27.7	
43-37_43-38		1794	1794				8		111.1	
5-58_5-57		1794	1794			Yes	8	1/1/1954	131.1	
11-108_11-107		1792	1792			Yes	8	1/1/1988	309.3	
11-109_11-10		1792	1792			Yes	8	1/1/1988	191.1	
12-60_13-105		1792	1792				6	1/1/1956	500.2	
30-96_30-95		1792	1792				8	1/1/1992	248.5	
20-17_20-18		1768	1768				6	1/1/1948	113.1	
20-81_20-82		1768	1768				8	1/1/1986	259.6	
21-23_21-24		1768	1768				6	1/1/1967	56.4	
26-2_26-65		1768	1768				8	1/1/1965	375.4	
30-81_30-63		1768	1768			Yes	8	1/1/1954	312.9	
10-21_10-20		1760	1760				8	1/1/1952	180.8	
13-12_13-11		1760	1760			Yes	8	1/1/1975	86.1	
13-13_13-12		1760	1760			Yes	8	1/1/1975	144.3	
13-14_13-13		1760	1760			Yes	8	1/1/1975	77.6	
13-15_13-12		1760	1760			Yes	8	1/1/1975	105.4	
13-76_13-64		1760	1760				6	1/1/1950	73.2	
17-14_17-72		1760	1760	Yes			8	1/1/1944	308.1	
18-121_19-22		1760	1760				6	1/1/1971	443.3	
19-99_19-100		1760	1760				6	1/1/1967	127.3	
20-54_20-55		1760	1760				15	1/1/1953	60.5	
28-107_28-96		1760	1760				12	1/1/1953	145.4	
28-38_28-107		1760	1760				12	1/1/1998	51.7	
29-67_29-70		1760	1760				10	1/1/1958	240.2	
29-68_29-67		1760	1760				10	1/1/1958	50.5	
29-70_29-72		1760	1760				10	1/1/1958	90.6	
30-83_30-82		1760	1760			Yes	8	1/1/1957	105.3	
42-72_42-26		1760	1760				8		268.8	
4-45_4-42		1760	1760			Yes	6	1/1/1964	182.6	
4-53_4-45		1760	1760			Yes	6	1/1/1975	443.3	
45-8_45-7		1760	1760				8	1/1/1975	129.4	
45-9_45-8		1760	1760				8	1/1/1975	63.7	
4-68_4-47		1760	1760			Yes	6	1/1/1944	217.3	
62-16_62-18		1760	1760				8	1/1/1979	258.5	
62-18_63-71		1760	1760				8	1/1/1979	287.8	
63-71_55-17		1760	1760				8	1/1/1979	333.7	
10-118_10-119		1750	1750				6		95.2	
18-114_18-40		1750	1750				8	1/1/1950	298.7	
18-58_18-122		1750	1750				6	1/1/1944	446.5	
18-89_18-87		1750	1750				8	1/1/1950	387.4	
20-30_20-53		1750	1750				6	1/1/1950	295.0	
20-88_20-32		1750	1750				6	1/1/1978	246.7	
21-39_21-37		1750	1750				8	1/1/1964	158.7	
2-18R_2-15		1750	1750				8	1/1/1961	315.7	
22-2_22-20		1750	1750				6	1/1/1965	298.6	
22-20_22-21		1750	1750				6	1/1/1965	94.1	
22-64_22-65		1750	1750				15	1/1/1965	11.5	
22-74_22-73		1750	1750				6	1/1/1947	107.6	
27-76_27-75		1750	1750	Yes		Yes	6	1/1/1944	366.9	
35-59_35-58		1750	1750			Yes	6	1/1/1947	330.4	
35-60_35-59		1750	1750				8	1/1/1947	89.0	
36-101_36-5		1750	1750				6	1/1/1944	151.3	
36-5_36-4		1750	1750				6	1/1/1944	133.4	
37-19_37-21		1750	1750				6	1/1/1952	276.6	
37-21_37-23		1750	1750				6	1/1/1944	185.3	
38-4_38-6		1750	1750				6	1/1/1968	135.0	
41-9_41-10		1750	1750				8	1/1/1960	360.0	
4-27R_4-26		1750	1750				8	1/1/1956	151.3	
26-57_26-56		1748	1748				8	1/1/1985	73.0	
41-29_41-28		1748	1748				8	1/1/1978	191.3	
47-39_47-37		1748	1748			Yes	8	1/1/1980	278.6	

Table 4

Updated Gravity Sewer Asset Management Plan Risk Scores and Supporting Information

** Lines in RED font have an updated Risk score that is greater that the 2015 GSAMP. Lines highlighted in GREY have "Highest" or "High" priority based or Structural quick rating, and were not included on a prior CIP list.

Pipe ID	VWHA Priority (For Reference Only)	2015 GSAMP Risk Score	2020 Risk Score	On 2016 CIP List	On 2016-17RR List	On CIPPriority 17-18 List	Diameter (in)	Install Date	Length (ft)	CVSan Comments
47-41_47-39		1748	1748			Yes	8	1/1/1980	182.7	
10-20_10-23		1738	1738				12	1/1/2009	269.6	
11-120_11-57		1738	1738			Yes	12	1/1/2009	300.8	
11-121_11-120		1738	1738			Yes	12	1/1/2009	297.4	
30-112_30-94		1738	1738				15	1/1/1966	77.8	
10-59_10-58		1736	1736	Yes			8	1/1/1952	176.2	
19-96_19-106		1736	1736				8	1/1/1952	10.4	
21-50R_21-49		1736	1736			Yes	8	1/1/1953	249.7	
27-111_27-110		1736	1736				8		101.4	
2-78_3-79		1736	1736				8	1/1/1952	129.1	
35-2_34-11		1736	1736				8	1/1/1953	138.9	Marked by CSM, easement
42-15_42-14		1736	1736				8		130.4	
9-47R_9-46		1736	1736				8	1/1/1952	113.5	
37-113_37-72		1734	1734				12	1/1/1970	8.7	
42-52_42-54		1728	1728				8	1/1/1980	171.6	
42-55_42-54		1728	1728				8	1/1/1980	77.9	
42-59_42-58		1728	1728				8	1/1/1990	165.0	
42-60_42-59		1728	1728				8	1/1/1990	90.5	
43-45_43-44		1728	1728				8	1/1/1988	298.8	
43-46_43-45		1728	1728				8	1/1/1988	221.8	
43-7_43-6		1728	1728				8	1/1/1969	201.3	
22-84_22-85		1722	1722				6	1/1/1947	21.8	
36-40_29-101		1722	1722				10	1/1/1958	194.6	
36-41_36-40		1722	1722				10	1/1/1958	125.2	
10-38R_10-37		1716	1716				8	1/1/1954	102.1	
20-104_20-103		1716	1716				18		240.5	
31-89_31-105		1716	1716	Yes			8	1/1/1949	50.2	
34-43R_34-44		1716	1716				8	1/1/1954	100.3	
35-19_35-20		1716	1716				8	1/1/1953	96.7	
35-20_35-21		1716	1716				8	1/1/1953	58.9	
35-6_35-15		1716	1716				8	1/1/1954	270.8	
35-69R_35-68		1716	1716				8	1/1/1951	278.4	
35-77_35-76		1716	1716				6		66.2	
35-81_35-80		1716	1716				8	1/1/1975	111.1	
35-85_35-84		1716	1716				8	1/1/1975	266.4	
36-19_36-20		1716	1716				8	1/1/1966	86.8	
42-49_42-50		1716	1716				8	1/1/1980	123.6	
42-88_42-89		1716	1716				8		151.1	
5-24_5-25		1716	1716				8	1/1/1960	178.7	
63-24_63-18		1716	1716				8	1/1/1983	135.8	
63-25_63-24		1716	1716				8	1/1/1983	221.1	
9-90_9-89		1716	1716				8	1/1/1952	240.7	
40-48_34-59		1710	1710				8	1/1/1978	522.7	
46-11_46-10		1710	1710			Yes	8	1/1/1981	376.0	
11-74_11-73		1696	1696				10	1/1/1952	387.7	
11-75_11-74		1696	1696				10	1/1/1954	103.3	
11-76_11-75		1696	1696				10	1/1/1952	183.6	
13-93_13-92		1680	1680				8	1/1/1989	196.0	
31-13_31-14		1680	1680				6	1/1/1947	293.8	
32-46_32-51		1680	1680				8	1/1/2011	33.4	
37-114Y_37-83		1680	1680				18	1/1/1982	8.2	
37-44R_37-43		1680	1680				6	1/1/1970	123.7	
48-10_48-9		1680	1680			Yes	8	1/1/1984	220.3	
48-3_48-2		1680	1680			Yes	8	1/1/1983	287.0	
48-9_48-3		1680	1680			Yes	8	1/1/1984	274.4	
10-95_10-94		1674	1674			Yes	8	1/1/1955	109.9	
10-96_10-95		1674	1674				8	1/1/1955	45.5	
29-63WYE_29-61		1674	1674				6	1/1/1963	198.4	
3-52_3-51		1674	1674			Yes	8	1/1/1955	126.5	
4-2_4-1		1674	1674				6	1/1/1951	380.2	
9-22R_9-21		1674	1674				8	1/1/1954	83.0	
10-124_11-121		1672	1672			Yes	12	1/1/2009	273.0	
10-125_10-124		1672	1672			Yes	12	1/1/2009	82.0	
10-126_10-139		1672	1672			Yes	12	1/1/2009	118.7	
10-139_10-125		1672	1672			Yes	12	1/1/2009	296.4	
11-14_11-16		1672	1672				12	1/1/1952	54.0	
11-9_11-107		1672	1672			Yes	12	1/1/2009	276.5	
21-104_21-103		1672	1672				24	1/1/2010	300.0	
5-56_5-57		1666	1666			Yes	8	1/1/1966	296.1	
11-55_11-56		1650	1650			Yes	6	1/1/1955	207.5	
20-29_20-70		1650	1650				6	1/1/1944	132.4	
22-3_22-17		1650	1650				6	1/1/1947	252.5	

Table 4

Updated Gravity Sewer Asset Management Plan Risk Scores and Supporting Information

** Lines in RED font have an updated Risk score that is greater that the 2015 GSAMP. Lines highlighted in GREY have "Highest" or "High" priority based or Structural quick rating, and were not included on a prior CIP list.

Pipe ID	VWHA Priority (For Reference Only)	2015 GSAMP Risk Score	2020 Risk Score	On 2016 CIP List	On 2016-17RR List	On CIPPriority 17-18 List	Diameter (in)	Install Date	Length (ft)	CVSan Comments
22-50_22-51		1650	1650			Yes	8	1/1/1955	325.4	
22-51_22-52		1650	1650			Yes	8	1/1/1955	308.4	
22-70_22-82		1650	1650				6	1/1/1947	115.8	
23-107_23-109		1650	1650				6	1/1/1944	324.3	
23-22_23-113		1650	1650				6	1/1/1947	6.6	
27-51_27-50		1650	1650				8	1/1/1948	21.7	
27-56R_27-54		1650	1650				6	1/1/1948	163.8	
27-94R_27-95		1650	1650				8	1/1/1952	109.1	
28-105_28-20		1650	1650				6	1/1/1947	200.8	
28-19_28-18		1650	1650				6	1/1/1946	119.3	
28-20_28-21		1650	1650				6	1/1/1946	274.2	
28-21_28-22		1650	1650				6	1/1/1946	257.0	
29-58R_29-57		1650	1650				6	1/1/1950	186.6	
29-64R_29-102		1650	1650				6	1/1/1944	316.1	
35-27_28-18		1650	1650				6	1/1/1946	230.9	
35-29R_28-105		1650	1650				6	1/1/1947	281.1	
35-43_28-23		1650	1650				6	1/1/1946	299.8	
62-49_62-52		1650	1650				8		22.1	
10-111_10-110		1638	1638			Yes	8	1/1/1987	236.7	
10-112_10-111		1638	1638				8	1/1/1987	152.2	
10-44R_10-43		1638	1638				8	1/1/1954	105.4	
10-68R_10-67		1638	1638			Yes	8	1/1/1952	409.3	
11-84R_11-83		1638	1638				8	1/1/1954	123.3	
12-118R_5-25		1638	1638				8	1/1/1960	364.9	
12-74R_12-73		1638	1638				6	1/1/1946	179.4	
14-18_14-17		1638	1638				8	1/1/1977	94.9	
15-5_15-4		1638	1638	Yes			6	1/1/1962	101.4	
15-6_15-5		1638	1638				8	1/1/1962	180.4	
15-9_15-10		1638	1638				8	1/1/1962	251.0	
17-16_17-15		1638	1638				8	1/1/1959	46.1	
17-23_17-22		1638	1638				8	1/1/1961	99.8	
17-24_17-22		1638	1638				6	1/1/1961	106.2	
17-25_17-24		1638	1638				8	1/1/1961	80.6	
17-26R_17-25		1638	1638				8	1/1/1961	212.0	
17-27_17-25		1638	1638				8	1/1/1961	148.2	
17-59_17-1		1638	1638				8	1/1/1990	102.1	
18-23_18-25		1638	1638				8	1/1/1959	140.2	
19-18R_19-17		1638	1638				6	1/1/1944	127.7	
19-25_19-24		1638	1638				8	1/1/1998	192.1	
19-47_19-46		1638	1638				8	1/1/1959	409.3	
19-48R_19-47		1638	1638				8	1/1/1959	229.9	
19-50R_19-51		1638	1638				8	1/1/1959	131.4	
22-98_14-41		1638	1638				8	1/1/1956	250.2	
23-71_15-6		1638	1638				8	1/1/1962	304.3	
26-21_26-19		1638	1638				6	1/1/1944	113.2	
26-9_26-8		1638	1638				8	1/1/1960	231.6	
27-105_27-3		1638	1638				6	1/1/1944	65.9	
28-102_28-101		1638	1638				8	1/1/1980	239.3	
32-24R_32-23		1638	1638				8	1/1/1955	183.9	
34-41_35-6		1638	1638				8	1/1/1954	78.2	
34-42R_34-41		1638	1638				8	1/1/1954	78.6	
34-45_34-41		1638	1638				8	1/1/1954	254.9	
36-15_36-17		1638	1638				8	1/1/1958	272.3	
36-24_36-28		1638	1638	Yes			8	1/1/1965	303.2	
36-28_36-29		1638	1638				8	1/1/1966	19.5	
36-9_36-8		1638	1638				8	1/1/1956	239.0	
40-32_40-34		1638	1638				8	1/1/1978	270.3	
40-35_40-36		1638	1638				8	1/1/1978	276.9	
42-38_42-40		1638	1638				8	1/1/1964	214.2	
42-40_42-41		1638	1638				8	1/1/1964	263.0	
44-34_44-30		1638	1638				8	1/1/1985	291.6	
44-34_44-35		1638	1638				8	1/1/1985	183.5	
44-45_44-46		1638	1638				8	1/1/1985	171.7	
5-72_5-24		1638	1638			Yes	8	1/1/1991	41.8	
62-20_44-31		1638	1638				8	1/1/1985	174.5	
62-22_62-21		1638	1638				8	1/1/1985	117.1	
62-9_62-7		1638	1638				8	1/1/1987	150.8	
63-23_63-24		1638	1638				8	1/1/1983	165.0	
8-51_16-11		1638	1638				8	1/1/1952	174.1	
9-101_9-102		1638	1638				8	1/1/1961	335.2	
18-11_18-10		1612	1612				8	1/1/1952	133.2	
18-110_18-109		1612	1612			Yes	8	1/1/1961	174.6	Marked by CSM, broken pipe

Table 4

Updated Gravity Sewer Asset Management Plan Risk Scores and Supporting Information

** Lines in RED font have an updated Risk score that is greater that the 2015 GSAMP. Lines highlighted in GREY have "Highest" or "High" priority based or Structural quick rating, and were not included on a prior CIP list.

Pipe ID	VWHA Priority (For Reference Only)	2015 GSAMP Risk Score	2020 Risk Score	On 2016 CIP List	On 2016-17RR List	On CIPPriority 17-18 List	Diameter (in)	Install Date	Length (ft)	CVSan Comments
18-84_18-117		1612	1612			Yes	8	1/1/1950	150.5	
18-97_18-96		1612	1612				8	1/1/1952	335.6	
20-23_20-22		1612	1612			Yes	8	1/1/1952	61.7	
2-13_2-9		1612	1612			Yes	8	1/1/1956	197.4	
21-38_21-37		1612	1612				8	1/1/1967	145.8	
2-22_2-21		1612	1612				8	1/1/1957	211.1	
22-35_22-37		1612	1612	Yes			6	1/1/1966	388.4	
27-22_27-21		1612	1612				8	1/1/2003	148.8	
27-26_27-24		1612	1612				8	1/1/2003	193.8	
27-28_27-26		1612	1612				8	1/1/2003	158.4	
27-29_27-28		1612	1612				8	1/1/2003	154.5	
27-30_27-29		1612	1612				8	1/1/2003	210.0	
27-9_27-8		1612	1612				8	1/1/1960	156.3	
30-2_30-1		1612	1612			Yes	8	1/1/1959	124.0	
30-76R_30-77		1612	1612				6	1/1/2005	405.6	
43-15_43-12		1612	1612				8	1/1/1967	282.8	
44-11_40-59		1612	1612				8	1/1/1964	130.4	
8-30_8-29		1612	1612				8	1/1/1959	266.4	
9-48R_9-49		1612	1612				8	1/1/1952	158.1	
9-52R_9-51		1612	1612				8	1/1/1952	118.0	
9-85R_9-84		1612	1612				8	1/1/1955	188.7	
11-15_11-16		1610	1610				6		182.4	
12-47_12-96		1610	1610				12	1/1/1952	60.1	
4-17_3-35		1610	1610			Yes	6	1/1/1953	238.6	
5-71_5-3		1610	1610				6	1/1/1944	129.5	
62-50_62-49		1610	1610				8		148.8	
8-17_8-16		1610	1610				6		37.5	
9-61_9-60		1610	1610				8	1/1/1957	75.1	
10-94_10-92		1600	1600			Yes	8	1/1/1956	46.3	
11-63_11-62		1600	1600				8	1/1/1950	108.5	
11-95_19-1		1600	1600				6	1/1/1949	255.4	
13-2_13-3		1600	1600			Yes	6	1/1/1947	408.8	
13-3_13-4		1600	1600			Yes	6	1/1/1947	439.9	
17-11_17-10		1600	1600				6	1/1/1955	58.1	
17-50_18-113		1600	1600				8	1/1/1952	458.0	
17-51R_17-52		1600	1600				8	1/1/1952	345.4	
18-101_18-99		1600	1600				8	1/1/1950	116.9	
18-31_18-30		1600	1600				6	1/1/1964	216.4	
18-83R_18-82		1600	1600				6	1/1/1944	275.1	
19-14_19-13		1600	1600				8	1/1/1955	319.4	
19-69_19-70		1600	1600				8	1/1/1952	299.1	
20-91_20-86		1600	1600				8	1/1/1990	280.4	
21-29_21-30		1600	1600				8	1/1/1961	270.8	
21-44R_21-45		1600	1600				6	1/1/1948	72.7	
21-45_22-4		1600	1600				6	1/1/1948	385.9	
21-46R_21-45		1600	1600				6	1/1/1948	85.9	
21-54_21-53		1600	1600				6	1/1/1947	300.4	
22-17_22-18		1600	1600				8	1/1/1953	131.9	
23-14_23-22		1600	1600				6	1/1/1947	228.5	
27-102R_27-101		1600	1600				8	1/1/1953	200.8	
27-44_27-43		1600	1600				6	1/1/1948	90.1	
27-80_27-77		1600	1600				8	1/1/1954	246.8	
28-108_28-68		1600	1600				6		118.9	
28-37R_28-36		1600	1600				6	1/1/1967	256.4	
29-15R_29-16		1600	1600			Yes	8	1/1/1951	324.8	
29-3R_29-2		1600	1600				6	1/1/1950	112.9	
30-70_30-69		1600	1600			Yes	8	1/1/1954	77.9	
31-59_31-60		1600	1600				6	1/1/1968	95.6	
31-75_31-74		1600	1600				6	1/1/1946	483.5	
31-8_31-7		1600	1600				8	1/1/1954	74.8	
35-40R_35-39		1600	1600				8	1/1/1953	72.1	
35-51R_35-50		1600	1600				8	1/1/1953	38.3	
36-100R_36-101		1600	1600				6	1/1/1944	100.8	
38-3R_38-2		1600	1600				8	1/1/1953	52.0	
4-19R_4-17		1600	1600				6	1/1/1953	315.5	
5-39_4-43		1600	1600				8	1/1/1964	294.3	
63-7_63-13		1600	1600				8	1/1/1979	369.9	
9-37_9-36		1600	1600			Yes	8	1/1/1953	122.3	
13-67_13-61		1568	1568				6	1/1/1940	387.5	
13-91_13-90		1568	1568				8	1/1/1989	31.3	
20-21_20-10		1568	1568				12		185.6	
29-71_29-70		1568	1568				8	1/1/1952	188.4	

Table 4

Updated Gravity Sewer Asset Management Plan Risk Scores and Supporting Information

** Lines in RED font have an updated Risk score that is greater that the 2015 GSAMP. Lines highlighted in GREY have "Highest" or "High" priority based or Structural quick rating, and were not included on a prior CIP list.

Pipe ID	VWHA Priority (For Reference Only)	2015 GSAMP Risk Score	2020 Risk Score	On 2016 CIP List	On 2016-17RR List	On CIPPriority 17-18 List	Diameter (in)	Install Date	Length (ft)	CVSan Comments
30-20_30-16		1568	1568				8	1/1/1957	352.0	
34-58_34-57		1568	1568				8	1/1/1978	126.5	
35-87_35-86		1568	1568				8	1/1/1975	149.2	
36-26_36-27		1568	1568				8	1/1/1958	225.9	
36-55_29-83		1568	1568				8	1/1/1960	358.1	
37-102_37-107		1568	1568				8	1/1/1982	78.0	
43-34_43-5		1568	1568				8		249.2	
47-9_47-8		1568	1568				8	1/1/1979	156.2	
30-113_30-44		1564	1564				6		167.0	
30-91R_30-59		1564	1564				4	1/1/1944	478.2	
42-10R_42-9		1564	1564				8	1/1/1966	520.0	
12-88_12-87		1560	1560			Yes	8	1/1/1963	80.9	
26-30_26-31		1560	1560				8	1/1/1960	332.4	
36-66_36-77		1560	1560				8	1/1/1964	382.8	
5-28_5-27		1560	1560			Yes	8	1/1/1962	368.5	
8-10_8-9		1558	1558				8	1/1/1959	147.6	
8-11_8-10		1558	1558				8	1/1/1959	174.0	
8-15_8-11		1558	1558				8	1/1/1959	167.2	
10-100R_10-99		1550	1550				6	1/1/1955	50.3	
11-101_11-102		1550	1550				8	1/1/1984	199.0	
11-111_11-30		1550	1550			Yes	6	1/1/1995	94.7	
11-116R_4-33		1550	1550			Yes	8	1/1/1965	386.5	
11-48R_11-45		1550	1550			Yes	6	1/1/1944	164.0	
11-53_11-51		1550	1550			Yes	6	1/1/1944	173.2	
11-64_11-63		1550	1550				8	1/1/1950	412.8	
14-47_14-46		1550	1550				8	1/1/1984	248.8	
17-12R_17-11		1550	1550				6	1/1/1950	515.7	
17-20R_17-19		1550	1550				8	1/1/1968	167.1	
17-42_17-41		1550	1550				8	1/1/1962	52.3	
17-48R_17-47		1550	1550				8	1/1/1958	159.6	
17-55R_17-70		1550	1550				8	1/1/1953	144.4	
17-5R_17-6		1550	1550				8	1/1/1950	166.2	
17-8_17-9		1550	1550				8	1/1/1950	452.7	
18-107_18-106		1550	1550				8	1/1/1952	148.3	
18-113_18-112		1550	1550				8	1/1/1952	152.9	
18-117_18-116		1550	1550				6	1/1/1950	87.8	
18-14_18-15		1550	1550				8	1/1/1956	263.6	
18-30_18-38		1550	1550				8	1/1/1998	41.1	
18-64_18-63		1550	1550				8	1/1/1950	153.2	
18-85R_18-86		1550	1550				6	1/1/1951	126.7	
19-85_19-84		1550	1550			Yes	8	1/1/1959	186.7	
20-49R_20-48		1550	1550				8	1/1/1955	97.4	
20-69_20-19		1550	1550				6	1/1/1952	146.5	
20-76_20-75		1550	1550			Yes	8	1/1/1980	299.5	
20-86_20-75		1550	1550				6	1/1/1990	172.1	
22-25R_22-26R		1550	1550				6	1/1/1962	31.4	
2-23_2-22		1550	1550				8	1/1/1956	444.8	
22-63_22-64		1550	1550				15	1/1/1965	242.8	
23-100_23-99		1550	1550				6	1/1/1944	427.4	
25-11R_25-12		1550	1550				6	1/1/1963	139.0	
25-7R_25-8		1550	1550				6	1/1/1965	131.7	
26-3_26-4		1550	1550				8	1/1/1965	51.8	
27-21_27-119		1550	1550				6	1/1/1948	105.4	
27-34_27-31		1550	1550	Yes		Yes	6	1/1/1948	191.4	
27-39_27-113		1550	1550	Yes			8	1/1/1948	165.9	
28-18_28-17		1550	1550	Yes			6	1/1/1946	130.3	
29-43_29-42		1550	1550				6	1/1/1944	526.8	
29-63R_29-63WYE		1550	1550				6	1/1/1963	69.3	
31-52_31-51		1550	1550	Yes		Yes	6	1/1/1946	184.2	
31-68_31-74		1550	1550				8	1/1/1954	284.0	
31-74_31-73		1550	1550				8	1/1/1946	232.4	
32-13_32-15		1550	1550				6		29.0	
32-19_32-20		1550	1550				8	1/1/1955	212.1	
32-33_23-103		1550	1550				8	1/1/1944	165.9	
32-34_32-33		1550	1550				6	1/1/1944	584.3	
32-49R_32-36		1550	1550				6	1/1/1971	154.6	
3-32_3-33		1550	1550			Yes	6	1/1/1944	400.9	
34-19_34-16		1550	1550				8	1/1/1955	128.5	
35-44R_35-43		1550	1550				6	1/1/1946	176.1	
35-72R_35-63		1550	1550				8	1/1/1951	132.0	
36-4_36-3		1550	1550	Yes			6	1/1/1944	329.6	
37-13_37-14		1550	1550				8	1/1/1952	440.3	

Table 4

Updated Gravity Sewer Asset Management Plan Risk Scores and Supporting Information

** Lines in RED font have an updated Risk score that is greater that the 2015 GSAMP. Lines highlighted in GREY have "Highest" or "High" priority based or Structural quick rating, and were not included on a prior CIP list.

Pipe ID	VWHA Priority (For Reference Only)	2015 GSAMP Risk Score	2020 Risk Score	On 2016 CIP List	On 2016-17RR List	On CIPPriority 17-18 List	Diameter (in)	Install Date	Length (ft)	CVSan Comments
37-32_37-33		1550	1550				6	1/1/1944	244.3	
37-33_37-45		1550	1550	Yes			6	1/1/1944	166.6	
4-26_3-88		1550	1550				8	1/1/1956	148.6	
43-14R_43-13		1550	1550				8	1/1/1967	180.5	
43-60_43-59		1550	1550				8	1/1/2000	298.9	
44-37_44-26		1550	1550				8	1/1/1985	277.3	
61-6_61-5		1550	1550				8	1/1/1979	319.4	
63-11_62-56		1550	1550				8	1/1/1979	185.1	
8-31R_8-30		1550	1550				8	1/1/1959	99.0	
8-44_8-41		1550	1550				8	1/1/1961	270.3	
8-46R_8-45		1550	1550				8	1/1/1961	34.3	
8-6_8-5		1550	1550				8	1/1/1975	216.5	
9-23R_9-24		1550	1550			Yes	8	1/1/1954	31.7	
9-66R_9-65		1550	1550				8	1/1/1962	228.7	
9-67R_8-36		1550	1550				8	1/1/1961	376.2	
12-26_12-27		1540	1540				6	1/1/1944	279.5	
18-5_18-6		1540	1540				8	1/1/1957	282.8	
3-55_3-57		1540	1540			Yes	8	1/1/1955	155.4	
45-27_45-13		1540	1540				10	1/1/1995	210.3	
47-23_47-24		1540	1540				8	1/1/1983	162.1	
55-14_55-19		1540	1540				8	1/1/1979	283.1	
3-36_3-37		1530	1530			Yes	8	1/1/1944	159.6	
3-37_3-39		1530	1530			Yes	8	1/1/1956	171.5	
3-57_10-82		1530	1530			Yes	10	1/1/1964	47.6	
41-26_41-27		1530	1530				6	1/1/1975	143.1	
43-39_43-26		1530	1530				8	1/1/1969	210.2	
30-90_30-58		1520	1520				8	1/1/1983	87.5	
45-28_45-27		1520	1520				8	1/1/1985	298.7	
61-5_61-4		1520	1520				8	1/1/1979	480.0	
10-74_10-64		1518	1518			Yes	10	1/1/1964	222.8	
21-103_21-102		1518	1518				24	1/1/2010	319.0	
31-34_31-10		1504	1504				8	1/1/1982	280.1	
13-9R_13-8		1500	1500			Yes	8	1/1/1961	187.8	
21-37_21-36		1500	1500				8	1/1/1964	208.1	
25-9R_25-10		1500	1500				6	1/1/1963	118.4	
26-36_26-69		1500	1500				8	1/1/1961	338.8	
29-61_36-2		1500	1500				6	1/1/1944	268.7	
39-3_39-2		1500	1500				8	1/1/1960	235.6	
4-20R_4-55		1500	1500			Yes	6	1/1/1965	50.0	
13-73_13-72		1496	1496			Yes	8	1/1/1953	135.7	
30-92_30-93		1496	1496			Yes	8	1/1/1990	180.6	
43-8_43-43		1496	1496				8	1/1/1969	24.3	
33-5_33-4		1488	1488				8	1/1/1979	151.0	
28-78_28-82		1482	1482				8	1/1/1977	67.1	
34-60_34-59		1482	1482				8	1/1/1978	250.8	
40-33_40-32		1482	1482				8	1/1/1978	344.9	
40-36_40-37		1482	1482				8	1/1/1978	345.7	
40-39_40-38		1482	1482				8	1/1/1978	205.3	
40-42_40-43		1482	1482				8	1/1/1978	167.6	
40-43_40-45		1482	1482				8	1/1/1978	337.0	
40-44_40-43		1482	1482				8	1/1/1978	183.5	
40-45_40-46		1482	1482				8	1/1/1978	285.7	
40-55_34-61		1482	1482				8	1/1/1978	379.8	
47-12_47-13		1482	1482			Yes	8	1/1/1980	129.3	
47-13_47-11		1482	1482			Yes	8	1/1/1980	248.4	
47-14_47-13		1482	1482			Yes	8	1/1/1980	298.3	
47-15_47-14		1482	1482			Yes	8	1/1/1980	309.7	
47-26_47-27		1482	1482			Yes	8	1/1/1980	303.8	
47-36_47-35		1482	1482				8	1/1/1980	180.6	
47-38_47-37		1482	1482			Yes	8	1/1/1980	168.3	
47-43_47-27		1482	1482			Yes	8	1/1/1980	222.9	
48-15_47-44		1482	1482			Yes	8	1/1/1983	290.1	
19-41_19-42		1472	1472				6	1/1/1953	12.4	
23-74_23-73		1472	1472				8	1/1/1962	140.8	
26-19_26-48		1472	1472				6	1/1/1954	136.8	
26-28R_26-27		1472	1472				8	1/1/1964	87.2	
29-93_29-94		1472	1472				6	1/1/1986	31.0	
32-8R_32-7		1472	1472				6	1/1/1971	126.7	
35-16R_35-15		1472	1472				8	1/1/1954	59.0	
35-67_35-66		1472	1472				8	1/1/1951	191.4	
35-83_35-84		1472	1472				8	1/1/1975	115.0	
35-86_35-85		1472	1472				8	1/1/1975	263.6	

Table 4

Updated Gravity Sewer Asset Management Plan Risk Scores and Supporting Information

** Lines in RED font have an updated Risk score that is greater that the 2015 GSAMP. Lines highlighted in GREY have "Highest" or "High" priority based or Structural quick rating, and were not included on a prior CIP list.

Pipe ID	VWHA Priority (For Reference Only)	2015 GSAMP Risk Score	2020 Risk Score	On 2016 CIP List	On 2016-17RR List	On CIPPriority 17-18 List	Diameter (in)	Install Date	Length (ft)	CVSan Comments
35-95_35-96		1472	1472				8	1/1/1989	202.6	
36-18_36-19		1472	1472				8	1/1/1966	155.7	
36-54_36-53		1472	1472				8	1/1/1952	366.3	
42-42_42-41		1472	1472				8	1/1/1964	85.3	
43-35_43-34		1472	1472				8	1/1/1988	313.9	
62-29_62-32		1472	1472				8	1/1/1987	189.2	
62-30_62-29		1472	1472				8	1/1/1987	226.1	
62-31_62-30		1472	1472				8	1/1/1987	240.9	
63-22_63-21		1472	1472				8	1/1/1983	137.2	
63-26_63-27		1472	1472				8	1/1/1983	195.9	
11-110_19-91		1470	1470				8	1/1/1984	323.1	
11-71R_11-52		1470	1470				6	1/1/1945	151.1	
12-38_12-109		1470	1470				8	1/1/1966	360.5	
17-31_17-64		1470	1470				8	1/1/1957	350.7	
17-64_18-5		1470	1470				8	1/1/1957	282.5	
18-10_18-17		1470	1470				8	1/1/1952	324.9	
18-9_18-10		1470	1470				8	1/1/1954	63.7	
19-91_19-90		1470	1470				8	1/1/1984	246.2	
19-91_19-92		1470	1470				8	1/1/1984	245.5	
19-92_19-93		1470	1470				10	1/1/1984	238.4	
22-13_22-14		1470	1470				12	1/1/1953	60.7	
22-14_22-15		1470	1470				12	1/1/1953	438.4	
2-26_9-124		1470	1470			Yes	8	1/1/1957	288.9	
3-67_3-66		1470	1470				8	1/1/1951	108.1	
4-1_4-8		1470	1470			Yes	6	1/1/1951	55.6	
47-22_47-23		1470	1470				8	1/1/1983	170.5	
12-6_12-113		1452	1452				10	1/1/1944	432.2	
31-113_31-109		1450	1450				8	1/1/1978	104.6	
31-73_31-72		1450	1450				6	1/1/1946	88.3	
10-18_10-19		1440	1440				8	1/1/1952	198.3	
10-22_10-21		1440	1440				8	1/1/1952	246.4	
11-21_11-97		1440	1440			Yes	8	1/1/1959	268.4	
12-10_12-7		1440	1440				8	1/1/1964	196.7	
12-71_12-67		1440	1440				10	1/1/1954	271.4	
15-7R_23-40		1440	1440				8	1/1/1962	150.3	
17-69_17-24		1440	1440				6	1/1/2006	150.7	
19-21_19-17		1440	1440				8	1/1/1965	204.9	
19-74_19-73		1440	1440				8	1/1/1955	128.1	
19-77_19-74		1440	1440				8	1/1/1955	398.9	
19-94_19-95		1440	1440				10	1/1/1984	100.7	
28-101_28-89		1440	1440				8	1/1/1980	76.6	
31-12_31-106		1440	1440				8	1/1/1954	99.5	
35-36_35-49		1440	1440				8	1/1/1953	63.7	
37-98_37-99		1440	1440				8	1/1/1988	226.4	
37-99_37-100		1440	1440				8	1/1/1988	55.3	
4-10_4-49		1440	1440				6	1/1/1944	348.6	
42-62_42-61		1440	1440				8	1/1/1990	282.5	
5-3_4-44		1440	1440	Yes			8	1/1/1944	377.2	
5-60_5-59		1440	1440				8	1/1/1954	245.4	
61-14_61-15		1440	1440				8	1/1/1987	260.5	
61-15_61-16		1440	1440				8	1/1/1987	251.8	
61-16_61-17		1440	1440				8	1/1/1987	270.9	
62-34_61-14		1440	1440				8	1/1/1987	248.3	
62-36_62-35		1440	1440				8	1/1/1987	200.1	
63-72_63-36		1440	1440				8	1/1/1979	263.5	
71-20_71-25		1440	1440				8		132.6	
9-43_9-121		1440	1440				8	1/1/1952	132.1	
9-46_9-45		1440	1440				8	1/1/1952	135.5	
9-53_9-51		1440	1440				8	1/1/1952	176.4	
12-23_12-57		1430	1430				12	1/1/1977	490.5	
12-57_12-56		1430	1430				21	1/1/1965	278.0	
21-98_21-99		1430	1430				27	1/1/2010	26.7	
13-66_13-67		1428	1428				6	1/1/1940	466.7	
37-92_30-110		1428	1428				12	1/1/1982	373.7	
43-12_43-11		1428	1428				8	1/1/1967	206.5	
10-83_10-82		1426	1426			Yes	8	1/1/1954	152.4	
22-119R_22-120		1426	1426			Yes	6	1/1/1947	150.7	
22-49R_22-75		1426	1426				6	1/1/1948	118.3	
22-78R_22-77		1426	1426				6		22.4	
3-63_3-62		1426	1426				8	1/1/1951	354.6	
37-40R_37-116Y		1426	1426				6		116.8	
3-86_10-104		1426	1426			Yes	8	1/1/1951	204.0	

Table 4

Updated Gravity Sewer Asset Management Plan Risk Scores and Supporting Information

** Lines in RED font have an updated Risk score that is greater that the 2015 GSAMP. Lines highlighted in GREY have "Highest" or "High" priority based or Structural quick rating, and were not included on a prior CIP list.

Pipe ID	VWHA Priority (For Reference Only)	2015 GSAMP Risk Score	2020 Risk Score	On 2016 CIP List	On 2016-17RR List	On CIPPriority 17-18 List	Diameter (in)	Install Date	Length (ft)	CVSan Comments
41-27_41-17		1426	1426				6		332.8	
42-16_42-48		1426	1426				8		33.7	
42-47_42-46		1426	1426				8		164.6	
42-48_42-47		1426	1426				8		88.6	
5-41_5-42		1426	1426				8		98.1	
9-13_2-78		1426	1426				8	1/1/1952	166.8	
9-16_9-14		1426	1426				8	1/1/1952	164.6	
9-17_9-16		1426	1426				8	1/1/1952	160.2	
9-18_9-17		1426	1426				8	1/1/1952	194.6	
9-29_9-30		1426	1426				8	1/1/1954	22.7	
20-101_20-99		1408	1408				18		178.4	
20-103_20-102		1408	1408				18		59.6	
20-82_20-42		1408	1408			Yes	6	1/1/1986	57.6	
20-96_21-122		1408	1408				18		277.8	
20-97_20-96		1408	1408				18		355.1	
20-98_20-97		1408	1408				18		266.4	
20-99_20-98		1408	1408				18		285.7	
21-121_21-120		1408	1408				18		243.1	
21-122_21-121		1408	1408				18		330.7	
27-100_27-99		1408	1408				8	1/1/1953	255.8	
11-117_11-116		1400	1400			Yes	8		132.3	
11-97_11-18		1400	1400			Yes	8	1/1/1959	67.8	
12-69R_12-68		1400	1400				6	1/1/1947	275.9	
13-100_13-101		1400	1400			Yes	8		118.3	
13-101_13-102		1400	1400			Yes	8		67.6	
13-101R_12-83		1400	1400			Yes	8	1/1/1953	88.3	
13-103_13-23		1400	1400				0		28.0	
18-43R_18-42		1400	1400	Yes		Yes	8	1/1/1950	94.2	
21-70_21-86		1400	1400			Yes	18	1/1/1953	12.6	
21-71_21-70		1400	1400			Yes	18	1/1/1953	132.4	
21-72_21-70		1400	1400			Yes	8	1/1/1955	320.8	
21-86_21-66		1400	1400			Yes	18	1/1/1955	405.0	
22-111_22-83		1400	1400				6	1/1/1947	171.0	
22-120_22-111		1400	1400				6	1/1/1947	229.9	
22-15_22-16		1400	1400				12	1/1/1953	235.9	
22-48_22-50		1400	1400			Yes	8	1/1/1955	241.1	
22-82_22-83		1400	1400				6	1/1/1947	60.2	
23-103_23-104		1400	1400			Yes	8	1/1/1944	114.6	
23-58_23-130		1400	1400				8		55.2	
27-107_27-109		1400	1400				6		188.4	
27-32_27-31		1400	1400				8	1/1/1951	186.6	
27-33R_27-32		1400	1400				8	1/1/1951	82.8	
27-35R_27-34		1400	1400				8	1/1/1948	264.9	
28-33R_28-31		1400	1400				6	1/1/1974	234.4	
28-40_28-45		1400	1400			Yes	8		75.0	
28-82_28-77		1400	1400				6	1/1/1944	274.8	
31-29_31-33		1400	1400			Yes	8	1/1/1954	321.5	
31-51_31-50		1400	1400				6	1/1/1946	82.0	
31-54_31-32		1400	1400			Yes	8	1/1/1954	338.2	
34-10_34-11		1400	1400				8	1/1/1953	208.4	
34-9_34-10		1400	1400				8	1/1/1953	160.5	
35-26_35-27		1400	1400				6	1/1/1946	224.5	
35-5R_35-4		1400	1400				8	1/1/1953	128.5	
35-61_35-60		1400	1400				8	1/1/1952	114.6	
35-7_34-9		1400	1400				8	1/1/1953	165.3	
35-70_35-68		1400	1400				8	1/1/1952	126.0	
35-8R_35-7		1400	1400				8	1/1/1953	115.9	
37-26_37-25		1400	1400				8	1/1/1957	166.9	
40-19_40-18		1400	1400				8	1/1/1964	320.8	
40-20_40-21		1400	1400				8	1/1/1964	181.9	
40-58_41-22		1400	1400				8	1/1/1964	286.9	
43-53_43-52		1400	1400				8		134.8	
43-56_43-57		1400	1400				15		45.2	
4-9_4-10		1400	1400				6	1/1/1962	30.0	
5-40R_5-41		1400	1400				8		108.7	
64-4_64-15		1400	1400				8		91.9	
71-18_71-19		1400	1400				8		155.0	
72-15_72-14		1400	1400				8		151.0	
72-2_72-4		1400	1400				8		93.1	
72-33_63-38		1400	1400				8		265.2	
72-4_72-6		1400	1400				8		154.3	
9-15R_9-14		1400	1400				8	1/1/1952	66.9	

Table 4

Updated Gravity Sewer Asset Management Plan Risk Scores and Supporting Information

** Lines in RED font have an updated Risk score that is greater that the 2015 GSAMP. Lines highlighted in GREY have "Highest" or "High" priority based or Structural quick rating, and were not included on a prior CIP list.

Pipe ID	VWHA Priority (For Reference Only)	2015 GSAMP Risk Score	2020 Risk Score	On 2016 CIP List	On 2016-17RR List	On CIPPriority 17-18 List	Diameter (in)	Install Date	Length (ft)	CVSan Comments
9-93R_9-92		1400	1400				8	1/1/1952	143.0	
10-14_10-13		1364	1364				8	1/1/1954	104.3	
22-26R_22-24		1364	1364				6	1/1/1962	72.3	
22-40_22-122		1364	1364				8	1/1/1966	12.4	
37-115Y_37-38		1364	1364				6	1/1/1970	103.6	
43-13_43-12		1364	1364				8	1/1/1967	114.0	
4-5_4-7		1364	1364				8	1/1/1962	126.3	
34-76_34-77		1360	1360				8	1/1/1986	256.7	
11-112_11-111		1350	1350			Yes	8	1/1/1995	255.2	
11-3_11-50		1350	1350			Yes	8	1/1/1956	149.8	
11-50_11-55		1350	1350			Yes	8	1/1/1965	238.1	
12-116R_12-111		1350	1350			Yes	6	1/1/1944	145.1	
16-5R_16-4		1350	1350				8	1/1/1966	149.5	
16-7_16-6		1350	1350				4	1/1/1966	8.0	
16-8_16-7		1350	1350				8	1/1/1966	36.7	
17-18_17-17		1350	1350				8	1/1/1968	322.4	
18-15_18-16		1350	1350				8	1/1/1956	183.8	
19-10R_19-9		1350	1350				6	1/1/1944	185.0	
19-23_19-20		1350	1350				6	1/1/1961	106.6	
19-66_19-67		1350	1350				6	1/1/1949	280.9	
2-11_2-33		1350	1350			Yes	8	1/1/1956	224.4	
2-14_2-2		1350	1350			Yes	8		114.0	
21-87R_21-38		1350	1350			Yes	6	1/1/1968	415.6	
22-19_22-18		1350	1350				6	1/1/1953	95.6	
22-45_22-40		1350	1350				8	1/1/1955	85.5	
25-1_25-2		1350	1350				8	1/1/1965	186.9	
25-14_25-12		1350	1350			Yes	8	1/1/1963	212.4	
27-40_27-39		1350	1350				6	1/1/1948	104.5	
27-54_27-53		1350	1350				8	1/1/1948	95.7	
27-55R_27-54		1350	1350				6	1/1/1948	330.4	
27-96_27-95		1350	1350				8	1/1/1959	195.3	
28-24_28-25		1350	1350				8	1/1/1954	191.4	
28-28_28-27		1350	1350				6	1/1/1944	76.6	
28-31_28-32		1350	1350				6	1/1/1974	47.7	
28-48R_28-47		1350	1350				6	1/1/1955	291.5	
28-67_28-66		1350	1350				6	1/1/1953	377.5	
29-57_29-56		1350	1350				6	1/1/1948	213.4	
29-84_29-47		1350	1350				6	1/1/1946	51.9	
30-35_30-36		1350	1350				8	1/1/1952	379.3	
31-14_31-16		1350	1350			Yes	6	1/1/1947	152.6	
31-15R_31-14		1350	1350				6	1/1/1947	58.5	
3-22_3-21		1350	1350			Yes	6	1/1/1955	263.1	
3-30_3-31		1350	1350			Yes	8	1/1/1944	296.0	
35-39_35-38		1350	1350				8	1/1/1953	190.4	
3-65_10-115		1350	1350			Yes	8	1/1/1951	253.6	
37-34_37-36		1350	1350				3	1/1/1970	172.1	
40-25_40-24		1350	1350				8	1/1/1964	176.3	
44-54_44-53		1350	1350				8	1/1/1986	116.1	
4-52_5-1		1350	1350				6	1/1/1944	403.9	
5-1_5-2		1350	1350				6	1/1/1944	41.4	
8-32R_8-33		1350	1350				8	1/1/1971	135.4	
8-34_8-33		1350	1350				8	1/1/1972	168.9	
8-40_8-39		1350	1350				8	1/1/1959	284.6	
8-47R_8-45		1350	1350				6	1/1/1964	266.7	
9-107_9-20		1350	1350			Yes	8		33.9	
9-108_9-37		1350	1350			Yes	8	1/1/1975	255.3	
9-24_9-25		1350	1350			Yes	8	1/1/1954	215.3	
9-25_9-26		1350	1350			Yes	8	1/1/1954	152.0	
9-34_9-32		1350	1350				8	1/1/1953	244.4	
9-72_9-73		1350	1350				8	1/1/1952	189.0	
12-107_12-108		1330	1330			Yes	8	1/1/1979	212.4	
47-33_47-2		1330	1330				8	1/1/1979	264.8	
48-2_48-1		1330	1330				8	1/1/1983	275.0	
48-21_48-20		1330	1330				8	1/1/1984	288.3	
49-1_48-22		1330	1330			Yes	8	1/1/1984	335.5	
49-2_49-1		1330	1330			Yes	8	1/1/1984	311.9	
10-46_10-106		1326	1326				8		45.1	
10-55_10-54		1326	1326			Yes	8	1/1/1952	144.2	
12-11_12-12		1326	1326				8	1/1/1964	121.6	
29-96_29-95		1326	1326				8	1/1/1981	201.6	
8-7_8-4		1312	1312				8	1/1/1959	118.2	
8-8_8-7		1312	1312				8	1/1/1959	180.3	

Table 4

Updated Gravity Sewer Asset Management Plan Risk Scores and Supporting Information

** Lines in RED font have an updated Risk score that is greater that the 2015 GSAMP. Lines highlighted in GREY have "Highest" or "High" priority based or Structural quick rating, and were not included on a prior CIP list.

Pipe ID	VWHA Priority (For Reference Only)	2015 GSAMP Risk Score	2020 Risk Score	On 2016 CIP List	On 2016-17RR List	On CIPPriority 17-18 List	Diameter (in)	Install Date	Length (ft)	CVSan Comments
10-12_10-13		1302	1302				8	1/1/1955	200.2	
10-84R_10-83		1302	1302				8	1/1/1954	65.6	
1-10R_1-8		1302	1302				6	1/1/1949	29.2	
11-36_11-37		1302	1302				8	1/1/1959	120.8	
1-8_1-6		1302	1302				6	1/1/1949	129.9	
18-56_18-53		1302	1302				8	1/1/1972	125.4	
18-86_18-84		1302	1302			Yes	8	1/1/1950	133.2	
1-9R_1-8		1302	1302				6	1/1/1949	52.0	
20-95_20-94		1302	1302			Yes	8	1/1/2007	172.2	
26-44_25-12		1302	1302				8	1/1/1963	192.1	
26-45_26-44		1302	1302				8	1/1/1963	119.2	
27-24_27-22		1302	1302				8	1/1/2003	239.3	
27-83_27-82		1302	1302				8		139.5	
2-9_2-10		1302	1302			Yes	8	1/1/1956	123.1	
31-119_31-118		1302	1302	Yes			8	1/1/2006	319.9	
3-15_3-18		1302	1302			Yes	8	1/1/1959	159.7	
3-17_3-16		1302	1302			Yes	8	1/1/1959	132.0	
3-18_3-17		1302	1302			Yes	8	1/1/1959	89.2	
3-19_3-18		1302	1302			Yes	8	1/1/1959	233.0	
43-16_43-15		1302	1302				8	1/1/1967	117.0	
4-36_4-37		1302	1302			Yes	8	1/1/1960	121.1	
44-51_44-53		1302	1302				8	1/1/1985	196.9	
55-7_55-11		1302	1302				8	1/1/1979	304.8	
63-5_63-6		1302	1302				8	1/1/1979	298.9	
9-119_9-120		1302	1302				8	1/1/1979	134.4	
9-122_9-40		1302	1302				8	1/1/1990	51.5	
9-14_9-13		1302	1302	Yes		Yes	8	1/1/1952	187.3	
11-104_11-105		1300	1300				8	1/1/1984	260.1	
1-1R_1-2		1300	1300			Yes	6	1/1/1949	207.3	
12-105_12-51		1300	1300			Yes	8	1/1/1979	499.7	
12-24_12-26		1300	1300			Yes	8	1/1/1953	500.7	
12-68_12-66		1300	1300				6	1/1/1947	118.9	
12-95_12-45		1300	1300				8	1/1/1956	368.1	
13-22R_13-21		1300	1300				6	1/1/1953	379.4	
13-23_13-24		1300	1300				8	1/1/1957	87.7	
13-85_13-2		1300	1300				6	1/1/1947	94.1	
15-12R_15-11		1300	1300				8	1/1/1962	172.1	
16-2_16-3		1300	1300				8	1/1/1966	218.9	
17-13_17-68		1300	1300				6		99.4	
17-44_17-43		1300	1300				8	1/1/1962	125.3	
17-47_17-37		1300	1300				8	1/1/1958	336.7	
17-53_17-52		1300	1300				8	1/1/1953	275.9	
17-6_17-8		1300	1300				8	1/1/1950	299.8	
17-63R_9-80		1300	1300			Yes	8	1/1/1952	200.1	
18-1_18-2		1300	1300				8	1/1/1957	435.3	
18-105_18-104		1300	1300				8	1/1/1952	155.3	
18-111_18-110		1300	1300			Yes	8	1/1/1961	281.4	
18-13_18-14		1300	1300				8	1/1/1956	185.2	
18-16_18-17		1300	1300				8	1/1/1952	87.3	
18-33_18-31		1300	1300				6	1/1/1964	365.7	
18-34_18-33		1300	1300				6	1/1/1964	130.8	
18-45_18-46		1300	1300				8	1/1/1950	397.9	
18-65_18-64		1300	1300				8	1/1/1950	113.4	
18-66R_18-65		1300	1300				8	1/1/1951	293.8	
18-70_18-61		1300	1300				6	1/1/1950	249.4	
18-72R_18-71		1300	1300				8	1/1/1956	268.7	
18-80R_18-79		1300	1300				8	1/1/1952	219.5	
18-88R_18-87		1300	1300				6	1/1/1950	115.7	
18-90_18-89		1300	1300				8	1/1/1950	284.0	
18-94R_18-95		1300	1300				8	1/1/1974	203.7	
18-95_18-96		1300	1300			Yes	8	1/1/1974	113.7	
18-99_18-98		1300	1300				8	1/1/1950	363.7	
19-15R_19-14		1300	1300				8	1/1/1955	230.2	
19-64R_19-65		1300	1300				6	1/1/1949	214.8	
19-65_19-66		1300	1300				6	1/1/1949	319.6	
19-68R_19-69		1300	1300				8	1/1/1952	297.8	
19-70_20-4		1300	1300				8	1/1/1953	408.2	
19-75_19-74		1300	1300				8	1/1/1955	240.1	
19-78R_19-80		1300	1300				8	1/1/1956	134.3	
19-84_19-83		1300	1300				8	1/1/1956	180.8	
20-3_20-2		1300	1300				8	1/1/1953	169.6	
20-31R_20-30		1300	1300				6	1/1/1950	74.5	

Table 4

Updated Gravity Sewer Asset Management Plan Risk Scores and Supporting Information

** Lines in RED font have an updated Risk score that is greater that the 2015 GSAMP. Lines highlighted in GREY have "Highest" or "High" priority based or Structural quick rating, and were not included on a prior CIP list.

Pipe ID	VWHA Priority (For Reference Only)	2015 GSAMP Risk Score	2020 Risk Score	On 2016 CIP List	On 2016-17RR List	On CIPPriority 17-18 List	Diameter (in)	Install Date	Length (ft)	CVSan Comments
20-4_20-3		1300	1300				8	1/1/1953	173.0	
20-83_20-81		1300	1300				8	1/1/1986	139.9	
20-93_20-29		1300	1300				8	1/1/1994	279.2	
21-30_21-31		1300	1300				8	1/1/1961	110.6	
21-40_22-5		1300	1300				8	1/1/1955	430.3	
21-41R_21-40		1300	1300				8	1/1/1955	313.1	
21-43_21-42		1300	1300				8	1/1/1956	120.9	
21-49_21-48		1300	1300				6	1/1/1953	60.1	
21-55_21-54		1300	1300				6	1/1/1947	300.9	
21-60_21-59		1300	1300				6	1/1/1947	300.9	
2-21_2-32		1300	1300				8		182.8	
2-21R_2-32		1300	1300				8	1/1/1956	53.3	
22-37_22-36		1300	1300			Yes	6	1/1/1966	14.4	
22-46_22-47		1300	1300				8	1/1/1948	275.1	
22-47_22-48		1300	1300				8	1/1/1955	288.0	
22-5_22-15		1300	1300				8	1/1/1953	302.9	
23-35_23-49		1300	1300				6	1/1/1947	299.3	
25-2_26-3		1300	1300				8	1/1/1965	247.6	
25-4_25-2		1300	1300				8	1/1/1965	185.3	
26-23_26-22		1300	1300				8	1/1/1952	117.4	
26-24_26-23		1300	1300				8	1/1/1952	175.7	
26-25R_26-24		1300	1300				8	1/1/1952	259.0	
26-46_26-45		1300	1300				8	1/1/1963	262.9	
27-23_27-21		1300	1300				6	1/1/2003	164.2	
27-43_27-40		1300	1300				6	1/1/1948	157.4	
27-61_27-104		1300	1300				6	1/1/2005	138.5	
27-72_27-71		1300	1300				6	1/1/1968	240.7	
27-74_27-72		1300	1300				6	1/1/1944	160.6	
27-79R_27-78		1300	1300				8	1/1/1954	145.4	
27-84R_27-83		1300	1300				8		117.6	
27-90_27-89		1300	1300				8	1/1/1952	94.4	
27-97_27-98		1300	1300				8	1/1/1952	204.0	
28-23_28-24		1300	1300				8	1/1/1954	131.9	
28-25_28-27		1300	1300				8	1/1/1954	177.7	
28-27_28-92		1300	1300				8	1/1/2008	186.8	
28-45_28-44		1300	1300				8	1/1/1975	200.8	
29-4_29-2		1300	1300				8	1/1/1950	218.4	
29-48R_29-47		1300	1300				6	1/1/1946	138.8	
29-53_29-52		1300	1300				6	1/1/1980	218.0	
30-19_30-20		1300	1300				8	1/1/1957	175.1	
30-30_30-29		1300	1300				8	1/1/1952	151.0	
30-31_30-30		1300	1300				8	1/1/1952	266.1	
30-36_30-37		1300	1300				8	1/1/1952	377.5	
30-74_30-73		1300	1300				8	1/1/1957	118.1	
31-107_31-109		1300	1300				8		80.1	
31-69R_31-70		1300	1300				6		175.1	
31-70_32-15		1300	1300				6	1/1/1944	217.3	
32-10R_32-19		1300	1300				8	1/1/1955	244.7	
32-14R_32-13		1300	1300				6		96.0	
35-25R_35-24		1300	1300				8	1/1/1953	76.0	
35-41R_28-106		1300	1300				6	1/1/1947	271.3	
35-46_35-47		1300	1300				8	1/1/1953	149.3	
36-102_36-101		1300	1300				8	1/1/1980	333.4	
36-7R_36-8		1300	1300				8	1/1/1956	141.1	
36-8_36-17		1300	1300				8	1/1/1958	383.2	
37-15_37-14		1300	1300				8	1/1/1952	276.6	
37-16R_37-15		1300	1300				8	1/1/1952	147.6	
3-71R_3-70		1300	1300			Yes	8	1/1/1951	125.9	
38-1_38-2		1300	1300				8	1/1/1953	330.8	
38-11_38-4		1300	1300				6	1/1/1991	179.8	
38-11R_38-5		1300	1300				6	1/1/1968	107.3	
39-11_39-10		1300	1300				8	1/1/1961	164.0	
40-12_40-10		1300	1300				8	1/1/1959	126.6	
4-13R_4-14		1300	1300			Yes	8	1/1/1952	114.4	
42-77_43-60		1300	1300				8	1/1/2000	184.1	
44-38_44-37		1300	1300				8	1/1/1985	202.5	
55-20_55-7		1300	1300				8	1/1/1979	270.5	
63-3_63-2		1300	1300				8	1/1/1979	214.2	
63-3_63-6		1300	1300				8	1/1/1979	52.1	
63-6_63-7		1300	1300				8	1/1/1979	214.3	
63-7_63-8		1300	1300				8	1/1/1979	198.1	
72-6_72-7		1300	1300				8		153.4	

Table 4

Updated Gravity Sewer Asset Management Plan Risk Scores and Supporting Information

** Lines in RED font have an updated Risk score that is greater that the 2015 GSAMP. Lines highlighted in GREY have "Highest" or "High" priority based or Structural quick rating, and were not included on a prior CIP list.

Pipe ID	VWHA Priority (For Reference Only)	2015 GSAMP Risk Score	2020 Risk Score	On 2016 CIP List	On 2016-17RR List	On CIPPriority 17-18 List	Diameter (in)	Install Date	Length (ft)	CVSan Comments
8-48R_8-50		1300	1300				8	1/1/1953	80.5	
8-49_8-51		1300	1300				8	1/1/1952	161.5	
8-53R_16-2		1300	1300				8	1/1/1966	237.4	
9-113_9-57		1300	1300				8	1/1/1979	230.3	
9-129R_2-29		1300	1300			Yes	8	1/1/1957	116.8	
9-40_10-12		1300	1300				8	1/1/1955	579.3	
9-70_9-72		1300	1300				8	1/1/1952	248.8	
9-74_9-75		1300	1300				8	1/1/1952	183.7	
9-81_10-29		1300	1300				8	1/1/1952	459.4	
9-83_9-82		1300	1300				8	1/1/1952	167.7	
10-78_10-74		1298	1298				10	1/1/1964	273.2	
5-80_5-81		1298	1298			Yes	8	1/1/1950	88.6	
21-92_22-8		1292	1292				12	1/1/1982	174.3	
37-107_36-67		1288	1288				8	1/1/1982	254.4	
13-17_13-18		1280	1280				6	1/1/1947	54.1	
13-92_13-91		1280	1280				8	1/1/1989	168.0	
23-106R_23-115Y		1280	1280	Yes			6	1/1/1944	97.6	
29-88_29-87		1280	1280				8	1/1/1977	165.6	
29-89_29-88		1280	1280				6	1/1/1977	50.5	
29-91_29-92		1280	1280				8	1/1/1986	268.1	
38-12_38-11		1280	1280				8	1/1/1991	293.5	
27-126_27-127		1276	1276				8		66.2	
47-16_47-15		1260	1260				8	1/1/1983	149.8	
47-17_47-16		1260	1260				8	1/1/1983	381.4	
37-76_37-74		1258	1258				15	1/1/1969	71.1	
37-77_37-76		1258	1258				15	1/1/1969	128.8	
1-17_1-15		1250	1250			Yes	8	1/1/1948	318.0	
12-119R_11-22		1250	1250			Yes	8	1/1/1959	185.7	
13-25_13-26		1250	1250			Yes	8	1/1/1957	85.0	
13-28_13-98R		1250	1250			Yes	8	1/1/1957	168.4	
13-29_13-28		1250	1250			Yes	8	1/1/1957	101.8	
19-7_19-6		1250	1250				8	1/1/1956	30.1	
26-31_26-33		1250	1250				8	1/1/1960	332.6	
26-32R_26-31		1250	1250				8	1/1/1960	139.1	
26-33_26-34		1250	1250				8	1/1/1960	231.7	
26-34_26-70		1250	1250				8	1/1/1960	269.5	
26-35R_26-34		1250	1250				8	1/1/1960	228.9	
26-38R_26-36		1250	1250				8	1/1/1961	146.2	
26-39_27-9		1250	1250				8	1/1/1960	336.9	
26-40_26-39		1250	1250				8	1/1/1960	300.1	
26-42_26-41		1250	1250				8	1/1/1964	619.5	
26-69_26-70		1250	1250				8	1/1/1961	380.4	
29-65R_29-66		1250	1250				8	1/1/1958	150.7	
30-22_30-23		1250	1250				6	1/1/1946	300.6	
30-75R_30-74		1250	1250				8	1/1/1957	40.7	
31-28_31-27		1250	1250				8	1/1/1958	189.4	
31-30_31-29		1250	1250				8	1/1/1959	188.6	
35-68_35-60		1250	1250				8	1/1/1951	404.9	
39-1_40-1		1250	1250				8	1/1/1960	329.4	
39-2_39-1		1250	1250				8	1/1/1960	335.9	
39-25_39-26		1250	1250				8	1/1/1964	308.5	
39-4_39-3		1250	1250				8	1/1/1960	53.9	
39-8_40-11		1250	1250				8	1/1/1960	366.1	
40-11_40-10		1250	1250				8	1/1/1959	342.8	
40-26R_40-25		1250	1250				8	1/1/1964	117.5	
40-27R_40-28		1250	1250				8	1/1/1964	300.8	
44-4R_44-5		1250	1250				8	1/1/1964	263.8	
44-5_44-6		1250	1250				8	1/1/1964	303.9	
44-7_44-8		1250	1250				8	1/1/1964	196.5	
44-9_44-10		1250	1250				8	1/1/1964	300.4	
45-2R_45-3		1250	1250				8	1/1/1964	322.0	
10-42R_10-41		1248	1248				8	1/1/1954	63.4	
10-43_10-41		1248	1248				8	1/1/1954	135.8	
11-119_11-101		1248	1248				8	1/1/2008	111.6	
11-86_11-100		1248	1248				8	1/1/2008	278.0	
12-100_12-8		1248	1248			Yes	8	1/1/1964	294.5	
12-101R_12-100		1248	1248			Yes	8	1/1/1964	264.5	
12-8_12-7		1248	1248				8	1/1/1962	144.4	
14-41_14-40		1248	1248				8	1/1/1956	170.4	
14-42_14-41		1248	1248				8	1/1/1956	109.6	
15-8R_15-9		1248	1248				8	1/1/1962	85.2	
18-22_18-23		1248	1248				8	1/1/1959	83.0	

Table 4

Updated Gravity Sewer Asset Management Plan Risk Scores and Supporting Information

** Lines in RED font have an updated Risk score that is greater that the 2015 GSAMP. Lines highlighted in GREY have "Highest" or "High" priority based or Structural quick rating, and were not included on a prior CIP list.

Pipe ID	VWHA Priority (For Reference Only)	2015 GSAMP Risk Score	2020 Risk Score	On 2016 CIP List	On 2016-17RR List	On CIPPriority 17-18 List	Diameter (in)	Install Date	Length (ft)	CVSan Comments
18-36_19-25		1248	1248				8	1/1/1998	407.4	
20-47_20-46		1248	1248				8	1/1/1954	240.0	
20-6R_19-46		1248	1248				8	1/1/1959	71.9	
20-79_20-80		1248	1248				8	1/1/1986	293.8	
26-10_26-9		1248	1248				8	1/1/1960	329.4	
26-72_26-73		1248	1248				8		252.4	
26-73_26-10		1248	1248				8		167.4	
28-100_28-101		1248	1248				8	1/1/1980	108.9	
28-13_28-12		1248	1248				8	1/1/2005	288.0	
28-95_28-78		1248	1248				8	1/1/1977	240.3	
30-7R_30-74		1248	1248			Yes	8	1/1/1957	176.6	
30-95_30-94		1248	1248				8	1/1/1992	145.7	
34-44_34-45		1248	1248				8	1/1/1954	119.4	
34-47_34-46		1248	1248				8	1/1/1954	86.3	
35-65_35-64		1248	1248				8	1/1/1951	178.0	
35-73_35-71		1248	1248				8	1/1/1952	267.4	
35-78R_35-77		1248	1248				6		45.6	
35-82_35-81		1248	1248				8	1/1/1975	89.2	
35-84_35-81		1248	1248				8	1/1/1975	216.4	
36-16_36-15		1248	1248				8	1/1/1958	137.8	
36-20_36-23		1248	1248				8	1/1/1966	185.8	
37-96_37-100		1248	1248				8	1/1/1988	247.9	
40-31_40-32		1248	1248				8	1/1/1978	307.9	
42-36_42-37		1248	1248				8	1/1/1964	265.3	
42-37_42-38		1248	1248				8	1/1/1964	213.1	
42-41_36-66		1248	1248				8	1/1/1964	410.0	
42-50_42-52		1248	1248				8	1/1/1980	247.0	
42-51_42-50		1248	1248				8	1/1/1980	143.5	
42-53_42-52		1248	1248				8	1/1/1980	105.5	
42-65_42-64		1248	1248				8	1/1/1990	151.9	
42-68_42-36		1248	1248				8	1/1/1989	125.9	
42-89_42-90		1248	1248				8		218.4	
43-1_42-43		1248	1248				8	1/1/1968	323.0	
43-50_43-49		1248	1248				8	1/1/1995	262.2	
43-51_43-50		1248	1248				8	1/1/1995	155.6	
43-59_43-51		1248	1248			Yes	8	1/1/2000	293.3	
44-33_44-34		1248	1248				8	1/1/1985	207.7	
44-41_44-39		1248	1248				8	1/1/1985	236.6	
44-42_44-34		1248	1248				8	1/1/1985	144.0	
47-10_47-9		1248	1248				8	1/1/1979	266.4	
5-31_5-52		1248	1248				8	1/1/1956	108.3	
62-10_62-3		1248	1248				8	1/1/1979	325.1	
62-11_62-10		1248	1248				8	1/1/1979	188.2	
62-17_62-16		1248	1248				8	1/1/1979	143.1	
62-32_62-33		1248	1248				8	1/1/1987	356.0	
62-58_44-33		1248	1248				8	1/1/1985	209.6	
63-15_63-14		1248	1248				8	1/1/1983	206.2	
63-16_63-15		1248	1248				8	1/1/1983	185.7	
63-39_62-48		1248	1248				8		333.1	
63-40_63-39		1248	1248				8		304.9	
63-61_63-62		1248	1248				8	1/1/2001	227.8	
9-89_9-88		1248	1248				8	1/1/1952	165.4	
9-92_9-91		1248	1248				8	1/1/1952	184.7	
11-33_11-36		1240	1240				6	1/1/1965	168.4	
13-31R_13-32		1240	1240				8	1/1/1958	97.0	
3-88_3-87		1240	1240				8	1/1/1956	65.6	
4-33_4-34		1240	1240				8	1/1/1960	113.8	
5-47_5-48		1240	1240				8	1/1/1962	134.3	
10-128_10-127		1232	1232			Yes	8	1/1/2009	40.2	
12-32_12-29		1210	1210				12	1/1/1965	196.5	
21-100_21-99		1210	1210				27	1/1/2010	38.0	
21-101_21-100		1210	1210				24	1/1/2010	223.0	
21-102_21-101		1210	1210				24	1/1/2010	319.0	
21-96_21-106		1210	1210				8	1/1/2010	79.3	
3-58_3-57		1210	1210			Yes	10	1/1/1964	131.6	
3-59_3-58		1210	1210			Yes	10	1/1/1964	268.9	
3-66_3-60		1210	1210			Yes	8	1/1/1951	271.0	
4-47_4-53		1210	1210			Yes	6	1/1/1944	26.4	
10-27_10-26		1200	1200				8	1/1/1952	501.3	
20-70_20-88		1200	1200				6	1/1/1944	172.8	
33-24_33-23		1200	1200				8	1/1/1981	349.5	
33-6_33-5		1200	1200			Yes	8	1/1/1979	272.7	

Table 4

Updated Gravity Sewer Asset Management Plan Risk Scores and Supporting Information

** Lines in RED font have an updated Risk score that is greater that the 2015 GSAMP. Lines highlighted in GREY have "Highest" or "High" priority based or Structural quick rating, and were not included on a prior CIP list.

Pipe ID	VWHA Priority (For Reference Only)	2015 GSAMP Risk Score	2020 Risk Score	On 2016 CIP List	On 2016-17RR List	On CIPPriority 17-18 List	Diameter (in)	Install Date	Length (ft)	CVSan Comments
33-7_33-6		1200	1200			Yes	8	1/1/1979	272.1	
37-38_37-91		1200	1200				8	1/1/1985	190.0	
48-10_48-11		1200	1200			Yes	8	1/1/1984	191.9	
48-3_48-4		1200	1200				8	1/1/1983	325.7	
49-14_49-13		1200	1200			Yes	8	1/1/1984	365.7	
49-14_49-7		1200	1200			Yes	8	1/1/1984	334.0	
49-9_49-10		1200	1200			Yes	8	1/1/1984	208.3	
49-9_49-8		1200	1200			Yes	8	1/1/1984	221.7	
3-39_10-113		1190	1190			Yes	8	1/1/1954	66.4	
3-7_3-96		1190	1190			Yes	6		109.7	
4-54_4-53		1190	1190				6	1/1/1975	346.2	
31-47_31-46		1188	1188				8	1/1/1948	185.3	
42-66_42-65		1188	1188				8	1/1/1990	150.9	
43-42_43-55		1188	1188				8	1/1/1987	250.7	
25-16_25-17		1178	1178			Yes	8	1/1/1985	161.0	
33-16_33-17		1178	1178			Yes	8	1/1/1979	176.1	
33-17_33-18		1178	1178			Yes	8	1/1/1979	101.3	
33-3_26-64		1178	1178				8	1/1/1979	315.0	
33-4_33-3		1178	1178				8	1/1/1979	145.1	
37-91_37-90		1178	1178				8	1/1/1985	71.9	
40-37_40-48		1178	1178				8	1/1/1978	390.3	
47-19_47-18		1178	1178				8	1/1/1983	95.4	
10-130_10-30		1166	1166				8	1/1/2009	40.6	
43-24R_37-77		1156	1156				8	1/1/1969	440.6	
10-89_10-85		1150	1150			Yes	8	1/1/1954	72.6	
11-45_11-44		1150	1150			Yes	6	1/1/1944	98.0	
1-15_1-11		1150	1150			Yes	6	1/1/1948	308.0	
1-16_1-15		1150	1150			Yes	6	1/1/1948	25.1	
13-82R_13-104		1150	1150				8	1/1/1950	243.7	
13-98R_13-77		1150	1150			Yes	8	1/1/1950	262.3	
21-53_22-19		1150	1150				6	1/1/1947	300.7	
22-121R_22-120		1150	1150				6	1/1/1947	62.1	
23-102R_23-101		1150	1150				6	1/1/1944	170.0	
23-108R_23-109		1150	1150				6	1/1/1944	207.4	
23-13R_23-14		1150	1150				6	1/1/1947	40.8	
27-98_27-114		1150	1150				8	1/1/1952	142.0	
29-82R_29-72		1150	1150				6		97.1	
30-107_30-90		1150	1150				8		22.3	
31-24_31-25		1150	1150			Yes	8	1/1/1954	326.7	
31-25_31-29		1150	1150			Yes	8	1/1/1954	273.7	
31-36_31-35		1150	1150			Yes	8	1/1/1954	231.2	
31-55_31-54		1150	1150			Yes	8	1/1/1954	151.2	
31-56R_31-55		1150	1150			Yes	8	1/1/1954	238.7	
31-77_31-51		1150	1150				6	1/1/1946	133.4	
3-2_3-3		1150	1150				8	1/1/1950	241.8	
3-23_3-22		1150	1150				8	1/1/1955	60.0	
3-25_3-24		1150	1150			Yes	8	1/1/1955	179.1	
3-53_3-64		1150	1150			Yes	8		208.8	
35-9R_35-8R		1150	1150				8	1/1/1953	42.6	
3-64_3-30		1150	1150			Yes	8		29.5	
36-6_36-5		1150	1150				6		386.3	
37-110_37-103		1150	1150				8		109.7	
37-111_37-110		1150	1150				8		234.6	
37-39R_37-117Y		1150	1150				6		113.4	
39-15_39-14		1150	1150				8		27.2	
41-17_41-18		1150	1150				8		237.9	
4-16_3-34		1150	1150			Yes	6	1/1/1944	526.5	
45-57_45-33		1150	1150				8		195.7	
5-2_5-71		1150	1150				6	1/1/1944	81.4	
5-35R_5-67		1150	1150				8		14.6	
5-49_5-56		1150	1150				8	1/1/1954	33.4	
5-50_5-49		1150	1150				8	1/1/1954	26.8	
62-53_62-50		1150	1150				8		140.0	
62-54_62-53		1150	1150				8		139.8	
62-55_62-54		1150	1150				8		125.1	
64-15_PS9		1150	1150				8		12.8	
71-19_71-20		1150	1150				8		262.0	
71-6_71-5		1150	1150				8		369.9	
72-19_72-18		1150	1150				8		122.4	
72-8_72-7		1150	1150				8		141.2	
9-32_9-31		1150	1150			Yes	8	1/1/1954	35.7	
9-5_9-6		1150	1150			Yes	8	1/1/1954	45.9	

Table 4

Updated Gravity Sewer Asset Management Plan Risk Scores and Supporting Information

** Lines in RED font have an updated Risk score that is greater that the 2015 GSAMP. Lines highlighted in GREY have "Highest" or "High" priority based or Structural quick rating, and were not included on a prior CIP list.

Pipe ID	VWHA Priority (For Reference Only)	2015 GSAMP Risk Score	2020 Risk Score	On 2016 CIP List	On 2016-17RR List	On CIPPriority 17-18 List	Diameter (in)	Install Date	Length (ft)	CVSan Comments
9-55_9-53		1150	1150			Yes	8	1/1/1952	399.5	
9-56_9-55		1150	1150			Yes	8	1/1/1952	89.9	
9-59R_9-58		1150	1150				8		161.4	
11-106_19-92		1120	1120				10	1/1/1984	287.6	
12-108_12-97		1120	1120				12	1/1/1979	117.4	
12-41_12-42		1120	1120				8	1/1/1956	394.0	
13-105_13-7		1120	1120				6	1/1/1956	113.5	
29-103_29-102		1120	1120				8	1/1/1958	54.4	
29-66_29-67		1120	1120				8	1/1/1958	189.5	
29-83_29-68		1120	1120				8	1/1/1958	101.8	
3-5_4-1		1120	1120			Yes	6	1/1/1944	377.2	
3-96_3-3		1120	1120			Yes	6		167.7	
41-18_41-19		1120	1120				8	1/1/1965	134.1	
4-8_4-9		1120	1120			Yes	6	1/1/1944	188.1	
48-1_47-22		1120	1120				8	1/1/1983	280.1	
48-20_48-10		1120	1120				8	1/1/1988	143.2	
71-10_71-11		1120	1120				8		341.9	
71-11_71-12		1120	1120				8		316.0	
71-12_71-13		1120	1120				8		324.0	
71-13_71-22		1120	1120				8		389.2	
10-105_10-89		1100	1100			Yes	8	1/1/1954	180.4	
10-11_10-10		1100	1100			Yes	8	1/1/1955	110.5	
10-117R_10-118		1100	1100				6		26.1	
10-28_10-27		1100	1100				8	1/1/1952	397.1	
10-29_10-28		1100	1100				8	1/1/1952	145.7	
11-40R_11-39		1100	1100			Yes	8	1/1/1975	144.1	
11-43_11-30		1100	1100			Yes	6	1/1/1944	179.5	
11-49_11-50		1100	1100				6	1/1/1944	192.0	
11-87_11-86		1100	1100				6	1/1/1948	243.4	
11-93R_11-92		1100	1100				6	1/1/1948	149.6	
12-111_11-24		1100	1100			Yes	6	1/1/1966	123.6	
12-115R_12-111		1100	1100				6	1/1/1966	160.2	
12-17R_12-16		1100	1100			Yes	8	1/1/1954	128.1	
13-26_13-28		1100	1100			Yes	8	1/1/1957	178.8	
13-81R_13-34		1100	1100				8	1/1/1953	139.6	
1-4_1-5		1100	1100			Yes	8	1/1/1949	184.8	
14-2_14-3		1100	1100				8	1/1/1953	243.3	
14-3_14-4		1100	1100				8	1/1/1953	99.4	
17-56R_17-52		1100	1100				8	1/1/1952	291.5	
18-29R_19-87		1100	1100				6		251.2	
18-68_18-69		1100	1100				6	1/1/1950	251.5	
27-110_27-109		1100	1100				8		235.6	
27-73R_27-72		1100	1100				6	1/1/1968	152.3	
28-30R_28-28		1100	1100				6	1/1/1944	251.6	
28-91_28-35		1100	1100				8	1/1/1984	282.2	
30-79R_30-78		1100	1100				6	1/1/1966	362.5	DP 95 Replaced
30-87_30-88		1100	1100				8	1/1/1983	188.9	
31-118_31-67		1100	1100				6		228.6	
37-35R_37-36		1100	1100				8	1/1/1970	100.6	
37-37S_37-36		1100	1100				6	1/1/1970	107.4	
37-41_37-117Y		1100	1100				8	1/1/1970	49.6	
37-43_37-118Y		1100	1100				8	1/1/1970	114.3	
3-75R_3-74		1100	1100			Yes	8	1/1/1956	199.4	
38-7_38-6		1100	1100				6	1/1/1968	111.9	
39-34_39-35		1100	1100				8	1/1/1978	102.0	
42-69_42-72		1100	1100				8	1/1/1981	160.2	
42-71_42-72		1100	1100				8	1/1/1980	91.8	
42-76_42-69		1100	1100				8	1/1/1981	258.5	
43-57_37-80		1100	1100				15		141.8	
44-47_44-48		1100	1100				8	1/1/1985	216.0	
44-59_44-58		1100	1100				8	1/1/1986	147.7	
5-16R_5-17		1100	1100				8	1/1/1954	175.2	
5-22_5-23		1100	1100				6	1/1/1954	87.8	
5-29R_5-30		1100	1100				8	1/1/1956	139.7	
71-30_71-33		1100	1100				8		83.9	
72-1_72-2		1100	1100				8		208.4	
72-10_72-12		1100	1100				8		294.1	
8-28_8-20		1100	1100				8	1/1/1959	477.7	
9-75_9-76		1100	1100				8	1/1/1952	137.1	
47-44_47-43		1092	1092			Yes	8	1/1/1983	288.5	
30-86_30-43		1088	1088				12	1/1/1964	445.8	
37-80_37-77		1088	1088				15		200.3	

Table 4

Updated Gravity Sewer Asset Management Plan Risk Scores and Supporting Information

** Lines in RED font have an updated Risk score that is greater that the 2015 GSAMP. Lines highlighted in GREY have "Highest" or "High" priority based or Structural quick rating, and were not included on a prior CIP list.

Pipe ID	VWHA Priority (For Reference Only)	2015 GSAMP Risk Score	2020 Risk Score	On 2016 CIP List	On 2016-17RR List	On CIPPriority 17-18 List	Diameter (in)	Install Date	Length (ft)	CVSan Comments
43-49_43-7		1088	1088				8	1/1/1995	276.6	
11-61_11-59		1078	1078			Yes	8	1/1/1959	257.0	
20-106_20-11		1078	1078				12	1/1/1953	103.4	
30-118_30-117		1078	1078				8	1/1/2008	137.0	
30-121_30-122		1078	1078			Yes	8	1/1/2008	231.8	
30-122_30-117		1078	1078				8	1/1/2008	88.9	
37-101_37-102		1078	1078				8	1/1/1988	124.7	
5-57_5-80		1078	1078			Yes	8	1/1/1950	266.1	
18-129_27-126		1056	1056				8		120.1	
21-116_21-109		1056	1056				8	1/1/2010	76.5	
11-42R_11-39		1054	1054			Yes	8	1/1/1975	158.9	
3-85_3-84		1054	1054			Yes	8	1/1/1984	293.6	
39-16_39-15		1054	1054				8	1/1/1975	81.8	
39-5_39-3		1054	1054				8	1/1/1975	150.8	
39-6_39-5		1054	1054				8	1/1/1975	154.9	
43-30R_43-18		1054	1054				8	1/1/1968	112.4	
10-116R_10-26		1050	1050				6	1/1/1944	339.1	
10-120_10-121		1050	1050				6	1/1/1949	35.1	
10-121_11-95		1050	1050				6	1/1/1949	227.9	
10-81R_10-80		1050	1050			Yes	8	1/1/1953	258.0	
10-92_10-90		1050	1050			Yes	8	1/1/1954	133.1	
11-102_11-104		1050	1050				8	1/1/1984	262.4	
11-103_11-102		1050	1050				8	1/1/1984	278.7	
11-105_11-106		1050	1050				10	1/1/1984	289.0	
11-114_12-37		1050	1050			Yes	8	1/1/1954	131.7	
11-24_11-111		1050	1050			Yes	6	1/1/1944	106.3	
1-13_1-25R		1050	1050			Yes	8	1/1/1958	44.7	
11-67_11-66		1050	1050				6	1/1/1950	176.8	
1-2_1-3		1050	1050			Yes	6	1/1/1949	122.5	
12-39R_12-38		1050	1050				8	1/1/1969	200.7	
12-51_12-110		1050	1050	Yes		Yes	8	1/1/1944	333.1	
12-55_12-105		1050	1050			Yes	8	1/1/1944	112.1	Marked by CSM, broken pipe
12-84R_12-83		1050	1050			Yes	8	1/1/1963	308.7	
13-95_13-94		1050	1050				8	1/1/1989	94.5	
13-96_13-86		1050	1050				8	1/1/1978	202.5	
16-13_PS11		1050	1050				8	1/1/2004	242.3	
16-4_16-8		1050	1050				8	1/1/1966	85.9	
17-10_17-13		1050	1050				8		114.7	
17-19_17-18		1050	1050				8	1/1/1968	165.5	
17-2_17-67		1050	1050				8	1/1/1952	263.3	
17-28_17-64		1050	1050				8	1/1/1957	361.5	
17-29_17-28		1050	1050				8	1/1/1957	282.9	
17-3_17-2		1050	1050				8	1/1/1952	110.7	
17-32_17-31		1050	1050				8	1/1/1957	126.8	
17-34R_17-33		1050	1050	Yes			8	1/1/1957	150.7	
17-36_17-31		1050	1050				8	1/1/1957	138.1	
17-37_17-36		1050	1050				8	1/1/1957	304.2	
17-38_17-31		1050	1050				8	1/1/1957	300.4	
17-39_17-38		1050	1050				8	1/1/1957	202.2	
17-40_17-39		1050	1050				8	1/1/1962	276.8	
17-45_17-44		1050	1050				8	1/1/1962	248.0	
17-46R_17-44		1050	1050				8	1/1/1962	159.6	
17-46S_17-47		1050	1050				6		149.8	
17-49R_17-48R		1050	1050				6	1/1/1972	142.5	
17-4R_17-3		1050	1050				8	1/1/1952	209.8	
17-66_17-67		1050	1050				8	1/1/2004	99.0	
18-102R_18-101		1050	1050				8	1/1/1955	159.6	
18-104_18-126		1050	1050				8	1/1/1952	344.0	
18-106_18-105		1050	1050				8	1/1/1952	98.7	
18-108_18-107		1050	1050				8	1/1/1952	98.5	
18-123_19-12		1050	1050				8	1/1/1955	397.5	
18-126_18-103		1050	1050				8	1/1/1952	74.4	
18-2_18-3		1050	1050				8	1/1/1957	158.0	
18-38_18-122		1050	1050				8	1/1/1998	91.0	
18-41_18-114		1050	1050				8	1/1/1950	143.6	
18-48_18-6		1050	1050				8	1/1/1956	221.8	
18-49_18-48		1050	1050				8	1/1/1956	211.3	
18-50R_18-49		1050	1050				8	1/1/1956	119.3	
18-61_18-59		1050	1050				6	1/1/1948	279.3	
18-7_18-6		1050	1050				8	1/1/1956	86.9	
18-71_19-14		1050	1050				8	1/1/1955	250.5	
18-78_10-120		1050	1050				6	1/1/1949	116.2	

Table 4

Updated Gravity Sewer Asset Management Plan Risk Scores and Supporting Information

** Lines in RED font have an updated Risk score that is greater that the 2015 GSAMP. Lines highlighted in GREY have "Highest" or "High" priority based or Structural quick rating, and were not included on a prior CIP list.

Pipe ID	VWHA Priority (For Reference Only)	2015 GSAMP Risk Score	2020 Risk Score	On 2016 CIP List	On 2016-17RR List	On CIPPriority 17-18 List	Diameter (in)	Install Date	Length (ft)	CVSan Comments
18-79_18-78		1050	1050				6	1/1/1949	74.4	
18-8_18-7		1050	1050				8	1/1/1956	126.6	
18-81R_18-115		1050	1050				8	1/1/1955	251.5	
18-92_18-90		1050	1050				8	1/1/1950	145.7	
18-93R_18-92		1050	1050				8	1/1/1950	120.3	
18-98_18-86		1050	1050				8	1/1/1951	319.1	
19-90_11-103		1050	1050				8	1/1/1984	280.6	
20-24_20-23		1050	1050			Yes	8	1/1/1952	118.9	
20-90_20-86		1050	1050				8		253.8	
21-42_21-40		1050	1050				8	1/1/1955	283.4	
23-129_23-130		1050	1050				8		142.7	
25-10_25-8		1050	1050				8	1/1/1963	207.1	
25-12_25-10		1050	1050			Yes	8	1/1/1963	291.9	
25-13R_25-14		1050	1050				8	1/1/1963	122.0	
25-3R_25-4		1050	1050				6	1/1/1965	134.0	
25-5R_25-6		1050	1050				6	1/1/1965	124.6	
25-8_25-6		1050	1050				8	1/1/1965	207.3	
26-65_26-3		1050	1050				8	1/1/1995	55.1	
26-66_26-65		1050	1050				8	1/1/1995	283.6	
26-67_26-66		1050	1050				8	1/1/1995	89.0	
27-109_27-7		1050	1050				6	1/1/1989	205.8	
27-114_27-90		1050	1050				8	1/1/1952	198.2	
27-52R_27-51		1050	1050				8	1/1/1948	74.3	
27-86_27-85		1050	1050				8	1/1/1956	154.9	
27-92_27-91		1050	1050				8	1/1/1952	155.7	
28-104_28-46		1050	1050				10	1/1/1989	231.8	
28-110_28-102		1050	1050			Yes	8	1/1/2006	74.7	
28-22_28-23		1050	1050				6	1/1/1946	45.6	
28-26_28-25		1050	1050				8	1/1/1954	82.5	
28-47_28-50		1050	1050				10	1/1/1953	114.0	
28-50_28-12		1050	1050				10	1/1/1953	66.4	
29-32_29-30		1050	1050				6	1/1/1966	58.3	
29-50R_29-51		1050	1050				6	1/1/1962	78.8	
29-55R_29-56		1050	1050				6	1/1/1946	107.1	
30-103R_29-104		1050	1050				6		172.1	
31-16_31-4		1050	1050				8	1/1/1954	97.4	
31-23_31-24		1050	1050				8	1/1/1955	395.8	
3-13R_3-14		1050	1050			Yes	8	1/1/1959	183.6	
31-63_31-64		1050	1050				8	1/1/1953	260.0	
31-67_31-68		1050	1050				8	1/1/1954	84.1	
33-14_33-15		1050	1050				8	1/1/1979	303.2	
3-42_10-114		1050	1050			Yes	8	1/1/1960	334.6	
3-46R_3-47		1050	1050			Yes	8	1/1/1955	239.1	
34-75_34-76		1050	1050				8	1/1/1986	59.1	
3-50_3-53		1050	1050			Yes	8		176.6	
35-45R_35-46		1050	1050				8	1/1/1953	142.8	
35-63_35-62		1050	1050				8	1/1/1951	178.1	
3-68_3-67		1050	1050				8	1/1/1951	145.2	
3-69_3-68		1050	1050				8	1/1/1951	159.7	
37-14_37-22		1050	1050				8	1/1/1952	278.1	
37-22_37-21		1050	1050				8	1/1/1952	281.3	
37-24R_37-25		1050	1050				8	1/1/1957	173.5	
37-34_37-33		1050	1050				8	1/1/1970	110.6	
37-37R_37-36		1050	1050				8	1/1/1970	119.9	
3-74_3-73		1050	1050			Yes	8	1/1/1956	181.7	
38-2_38-4		1050	1050				8	1/1/1953	208.9	
38-5_38-11		1050	1050				6	1/1/1968	39.0	
4-12R_4-57		1050	1050				6	1/1/1944	247.4	
4-14_4-16		1050	1050			Yes	8	1/1/1952	202.7	
43-17R_43-16		1050	1050				8	1/1/1967	186.2	
4-31R_11-116		1050	1050			Yes	6	1/1/1962	240.1	
4-32R_4-33		1050	1050			Yes	8	1/1/1960	278.3	
43-33_43-32		1050	1050				8	1/1/1989	346.0	
4-3R_4-2		1050	1050				6	1/1/1951	248.3	
44-28_44-27		1050	1050				8	1/1/1985	190.1	
44-31_44-30		1050	1050				8	1/1/1985	224.6	
44-36_44-37		1050	1050				8	1/1/1985	297.3	
44-39_44-38		1050	1050				8	1/1/1985	198.5	
44-48_44-67		1050	1050				8	1/1/1987	242.7	
44-49_44-50		1050	1050				8	1/1/1985	277.6	
44-52_44-51		1050	1050				8	1/1/1985	54.8	
44-63_44-62		1050	1050				8	1/1/1986	93.2	

Table 4

Updated Gravity Sewer Asset Management Plan Risk Scores and Supporting Information

** Lines in RED font have an updated Risk score that is greater that the 2015 GSAMP. Lines highlighted in GREY have "Highest" or "High" priority based or Structural quick rating, and were not included on a prior CIP list.

Pipe ID	VWHA Priority (For Reference Only)	2015 GSAMP Risk Score	2020 Risk Score	On 2016 CIP List	On 2016-17RR List	On CIPPriority 17-18 List	Diameter (in)	Install Date	Length (ft)	CVSan Comments
44-63_44-64		1050	1050				8	1/1/1986	138.4	
44-65_44-66		1050	1050				8	1/1/1986	179.5	
45-33_45-34		1050	1050				8	1/1/1985	296.8	
47-22_47-21		1050	1050				8	1/1/1983	254.3	
5-36R_5-37		1050	1050			Yes	8	1/1/1964	286.0	
5-38_5-39		1050	1050			Yes	8	1/1/1964	305.5	
62-5_62-4		1050	1050				8	1/1/1987	112.7	
63-12_63-11		1050	1050				8	1/1/1979	186.1	
63-2_63-1		1050	1050				8	1/1/1979	189.3	
63-4_55-10		1050	1050				8	1/1/1979	246.5	
63-4_63-3		1050	1050				8	1/1/1979	392.6	
71-1_72-34		1050	1050				8		270.4	
71-16_71-17		1050	1050				8		247.5	
71-28_71-29		1050	1050				8		302.9	
71-7_71-6		1050	1050				8		384.0	
8-14R_8-13		1050	1050				8	1/1/1966	362.1	
8-21_8-20		1050	1050				8	1/1/1959	249.4	
8-26R_8-25		1050	1050				8	1/1/1959	289.5	
8-27R_8-28		1050	1050				8	1/1/1959	194.5	
8-33_8-29		1050	1050	Yes			8	1/1/1959	338.0	
8-35_8-34		1050	1050				8	1/1/1961	234.3	
8-36_8-35		1050	1050				8	1/1/1961	302.8	
8-38_8-34		1050	1050				8	1/1/1961	210.9	
8-39_8-38		1050	1050				8	1/1/1961	224.5	
8-43R_8-42		1050	1050				8	1/1/1959	179.1	
8-45_8-44		1050	1050				8	1/1/1961	350.4	
9-102_9-126		1050	1050				8		218.8	
9-110_9-112		1050	1050				8	1/1/1976	274.4	
9-111_9-112		1050	1050				8	1/1/1975	130.7	
9-112_8-6		1050	1050				8	1/1/1975	372.2	
9-114_9-57		1050	1050				8	1/1/1979	174.0	
9-118_9-119		1050	1050				8	1/1/1979	255.9	
9-126_8-37		1050	1050				8		74.2	
9-128_10-17		1050	1050				8	1/1/1952	50.2	
9-131_9-122		1050	1050				8	1/1/1998	61.4	
9-20_9-22		1050	1050			Yes	8	1/1/1954	94.0	
9-22_9-6		1050	1050			Yes	0		98.1	
9-36_9-35		1050	1050			Yes	8	1/1/1953	196.0	
9-38R_9-39		1050	1050				8	1/1/1955	122.2	
9-54R_9-53		1050	1050				8	1/1/1952	202.3	
9-57_9-56		1050	1050				8	1/1/1979	268.3	
9-64_9-63		1050	1050				8	1/1/1957	166.0	
9-68R_9-69		1050	1050				8	1/1/1952	160.1	
9-71R_9-72		1050	1050				8	1/1/1952	43.9	
9-82_10-17		1050	1050				8	1/1/1952	426.2	
38-15_37-87		1036	1036				10	1/1/1982	588.4	
10-131_11-123		1012	1012			Yes	12	1/1/2009	212.8	
10-132_10-131		1012	1012			Yes	12	1/1/2009	104.9	
10-133_10-132		1012	1012			Yes	12	1/1/2009	349.2	
10-134_10-133		1012	1012			Yes	12	1/1/2009	298.2	
10-41_10-39		1012	1012				8		345.7	
10-49_10-124		1012	1012				8	1/1/2009	31.1	
11-123_11-122		1012	1012			Yes	12	1/1/2009	51.8	
11-80_11-73		1012	1012				8	1/1/2008	106.5	
11-96_11-80		1012	1012				8	1/1/2008	240.7	
12-85_12-86		1012	1012				6	1/1/1944	82.2	
12-87_12-86		1012	1012				8	1/1/1963	274.8	
27-123_27-122		1012	1012				8		233.0	
44-70_62-31		1012	1012				8	1/1/1987	184.2	
8-130_9-129		1012	1012				8	1/1/1998	254.9	
9-95_9-94		1012	1012				8	1/1/1952	309.5	
9-96_9-95		1012	1012				8	1/1/1952	169.0	
9-97_9-96		1012	1012				8	1/1/1952	65.4	
11-2_11-3		1000	1000				8	1/1/1956	231.1	
21-117_21-29		1000	1000				8	1/1/1961	265.5	
2-20_2-19		1000	1000				8	1/1/1956	51.3	
2-32_2-20		1000	1000				8	1/1/1956	54.1	
2-33_3-74		1000	1000				8	1/1/1956	137.3	
26-41_26-40		1000	1000				8	1/1/1960	339.9	
26-43_26-42		1000	1000				8	1/1/1964	82.5	
31-26_31-25		1000	1000			Yes	8	1/1/1958	159.5	
31-27_31-26		1000	1000			Yes	8	1/1/1958	110.5	

Table 4

Updated Gravity Sewer Asset Management Plan Risk Scores and Supporting Information

** Lines in RED font have an updated Risk score that is greater that the 2015 GSAMP. Lines highlighted in GREY have "Highest" or "High" priority based or Structural quick rating, and were not included on a prior CIP list.

Pipe ID	VWHA Priority (For Reference Only)	2015 GSAMP Risk Score	2020 Risk Score	On 2016 CIP List	On 2016-17RR List	On CIPPriority 17-18 List	Diameter (in)	Install Date	Length (ft)	CVSan Comments
31-31R_31-30		1000	1000				8	1/1/1959	159.2	
36-25R_36-26		1000	1000				8	1/1/1959	214.3	
36-75_36-26		1000	1000				8	1/1/1959	157.5	
3-8_3-7		1000	1000			Yes	8	1/1/1956	63.3	
39-22_39-24		1000	1000				8	1/1/1964	201.8	
39-24_39-25		1000	1000				8	1/1/1964	219.6	
39-26_39-27		1000	1000				8	1/1/1964	302.4	
39-27_40-20		1000	1000				8	1/1/1964	301.1	
39-9R_39-8		1000	1000				6	1/1/1960	72.3	
40-1_40-2		1000	1000				8	1/1/1960	353.2	
4-15_4-14		1000	1000			Yes	8	1/1/1959	26.8	
44-1_44-2		1000	1000				8	1/1/1964	133.8	
44-10_40-58		1000	1000				8	1/1/1964	248.7	
44-2_44-11		1000	1000				8	1/1/1964	247.5	
44-3R_44-11		1000	1000				8	1/1/1964	148.8	
44-6_44-7		1000	1000				8	1/1/1964	205.0	
44-8_44-9		1000	1000				8	1/1/1964	204.2	
4-4R_4-5		1000	1000				8	1/1/1962	72.2	
5-30_5-31		1000	1000				8	1/1/1956	164.5	
55-1_55-2		1000	1000				8	1/1/1964	307.9	
55-2_55-3		1000	1000				8	1/1/1964	224.4	
55-3_55-5		1000	1000				8	1/1/1964	319.7	
55-5_44-2		1000	1000				8	1/1/1964	325.5	
10-10_10-12		992	992			Yes	8	1/1/1955	107.4	
10-13_10-15		992	992				8	1/1/1955	109.8	
10-15_10-59		992	992	Yes			8	1/1/1955	121.4	
17-41_17-39		992	992				8	1/1/1966	93.2	
28-44_28-98		992	992				8	1/1/1974	25.5	
29-62R_29-63WYE		992	992				6	1/1/1963	33.9	
31-49_31-35		992	992				8	1/1/1954	175.4	
3-73_3-72		992	992			Yes	8	1/1/1956	277.0	
43-41_43-56		992	992				15	1/1/1989	309.8	
45-19_44-69		992	992				8	1/1/1987	283.5	
45-25_45-26		992	992				8	1/1/1990	141.8	
4-7_4-9		992	992				8	1/1/1962	173.9	
5-13_5-9		992	992				8	1/1/1959	142.5	
63-8_63-9		992	992				8	1/1/1979	307.4	
9-120_9-121		992	992				8	1/1/1981	188.9	
9-123_9-122		992	992				8	1/1/1990	172.3	
10-65_10-101		990	990			Yes	8	1/1/1954	29.5	
10-82_10-78		990	990			Yes	10	1/1/1964	279.8	
12-91_12-92		990	990			Yes	8	1/1/1975	154.0	
4-44_4-43		990	990				6	1/1/1944	42.1	
46-9_46-7		990	990				8	1/1/1987	82.2	
71-21_71-20		990	990				8		184.0	
71-22_71-21		990	990				8		224.0	
9-49_9-46		990	990				8	1/1/1952	71.4	
9-50_9-49		990	990				8	1/1/1952	72.6	
31-10_31-114		980	980			Yes	8	1/1/1982	64.6	
31-33_31-34		980	980			Yes	8	1/1/1982	366.3	
3-84_3-60		980	980				10	1/1/1984	87.6	
12-106_12-105		950	950			Yes	8	1/1/1979	271.8	
13-87_13-86		950	950			Yes	8	1/1/1976	143.8	
21-91_22-128		950	950				12	1/1/1982	248.5	
21-92_21-91		950	950				12	1/1/1982	169.2	
22-125_22-13		950	950				12	1/1/1982	88.3	
22-126_22-125		950	950				12	1/1/1982	176.5	
22-128_22-126		950	950				12	1/1/1982	328.7	
25-15_25-16		950	950			Yes	8	1/1/1980	185.1	
26-64_26-63		950	950				8	1/1/1979	248.8	
30-89_30-107		950	950				8	1/1/1983	150.7	
31-112_31-28		950	950				8	1/1/1978	43.2	
33-15_33-16		950	950				8	1/1/1979	300.3	
33-18_33-19		950	950				8	1/1/1979	167.0	
39-32_40-30		950	950				8	1/1/1978	378.6	
40-29_40-30		950	950				8	1/1/1978	191.1	
40-38_40-37		950	950				8	1/1/1978	195.7	
40-40_40-37		950	950				8	1/1/1978	381.4	
40-41_40-40		950	950				8	1/1/1978	385.7	
40-46_40-47		950	950				8	1/1/1978	264.8	
40-47_40-48		950	950				8	1/1/1978	71.4	
40-49_40-50		950	950				8	1/1/1978	291.6	

Table 4

Updated Gravity Sewer Asset Management Plan Risk Scores and Supporting Information

** Lines in RED font have an updated Risk score that is greater that the 2015 GSAMP. Lines highlighted in GREY have "Highest" or "High" priority based or Structural quick rating, and were not included on a prior CIP list.

Pipe ID	VWHA Priority (For Reference Only)	2015 GSAMP Risk Score	2020 Risk Score	On 2016 CIP List	On 2016-17RR List	On CIPPriority 17-18 List	Diameter (in)	Install Date	Length (ft)	CVSan Comments
40-50_40-51		950	950				8	1/1/1978	215.0	
40-51_40-52		950	950				8	1/1/1978	196.2	
40-52_40-53		950	950				8	1/1/1978	386.3	
40-53_40-54		950	950				8	1/1/1978	348.9	
45-29_45-28		950	950				8	1/1/1985	381.7	
47-25_47-24		950	950				8	1/1/1983	301.2	
47-34_47-33		950	950				8	1/1/1979	140.5	
47-35_47-33		950	950				8	1/1/1980	200.7	
48-11_48-12		950	950			Yes	8	1/1/1984	298.7	
48-12_48-13		950	950			Yes	8	1/1/1984	311.2	
48-13_48-14		950	950			Yes	8	1/1/1984	233.1	
48-14_48-15		950	950			Yes	8	1/1/1984	287.9	
48-16_48-14		950	950			Yes	8	1/1/1984	318.4	
48-17_48-16		950	950			Yes	8	1/1/1984	199.7	
48-18_48-17		950	950			Yes	8	1/1/1984	127.0	
48-19_48-18		950	950			Yes	8	1/1/1984	126.8	
48-4_48-5		950	950			Yes	8	1/1/1983	298.3	
48-5_47-25		950	950			Yes	8	1/1/1983	298.9	
48-6_47-26		950	950			Yes	8	1/1/1983	298.2	
48-7_48-6		950	950			Yes	8	1/1/1983	299.4	
48-8_48-7		950	950			Yes	8	1/1/1984	258.3	
49-10_49-11		950	950			Yes	8	1/1/1984	233.2	
49-11_49-13		950	950			Yes	8	1/1/1984	289.0	
49-12_49-11		950	950			Yes	8	1/1/1984	111.3	
49-13_49-2		950	950			Yes	8	1/1/1984	271.7	
49-15_49-14		950	950			Yes	8	1/1/1984	109.5	
49-3_49-2		950	950			Yes	8	1/1/1984	244.7	
49-4_49-2		950	950			Yes	8	1/1/1984	237.4	
49-5_49-4		950	950			Yes	8	1/1/1984	299.8	
49-6_49-5		950	950			Yes	8	1/1/1984	203.0	
49-7_49-6		950	950			Yes	8	1/1/1984	273.8	
49-8_49-7		950	950			Yes	8	1/1/1984	219.5	
55-18_55-16		950	950				8	1/1/1979	331.0	
61-7_61-6		950	950				8	1/1/1979	95.9	
62-2_62-1		950	950				8	1/1/1979	254.2	
63-1_62-18		950	950				8	1/1/1979	208.1	
22-140_22-129		902	902				8	1/1/2006	190.8	
30-107_30-106		880	880				8	1/1/1999	88.5	
32-51_32-50		880	880				8	1/1/2011	12.9	
37-112_37-62		880	880				8	1/1/1988	190.0	
31-116_31-115		868	868			Yes	8	1/1/1981	245.0	
47-18_47-17		868	868				8	1/1/1983	333.5	
10-135_10-134		858	858			Yes	12	1/1/2009	114.5	
10-136_10-135		858	858			Yes	12	1/1/2009	229.0	
10-25_10-110		858	858				6	1/1/1944	53.8	
10-66_10-134		858	858				8	1/1/2009	32.7	
10-69_10-67		858	858			Yes	8	1/1/1952	50.4	
10-70_10-69		858	858			Yes	8	1/1/1952	79.5	
10-72_10-70		858	858			Yes	8	1/1/1952	143.5	
11-59_11-58		858	858			Yes	8	1/1/1959	346.3	
11-60_11-59		858	858			Yes	8	1/1/1959	85.8	
11-81_11-100		858	858				8	1/1/2008	34.6	
11-81_11-96		858	858				6	1/1/1954	50.2	
11-83_11-82		858	858				8	1/1/1954	127.4	
11-98_11-83		858	858				8	1/1/1954	33.7	
12-15_12-14		858	858			Yes	8	1/1/1954	197.1	
12-16_12-15		858	858			Yes	8	1/1/1954	302.0	
12-89_12-87		858	858				8	1/1/1963	272.6	
12-92_12-102		858	858			Yes	8	1/1/1975	220.2	
18-128_18-129		858	858				8		73.0	
27-124_27-123		858	858				8		50.0	
27-125_27-124		858	858				8		163.0	
30-119_30-118		858	858				8	1/1/2008	58.0	
30-120_30-118		858	858				8	1/1/2008	65.0	
37-100_37-101		858	858				8	1/1/1988	61.6	
40-4_40-3		858	858				6	1/1/1960	199.4	
5-51_5-70		858	858				8	1/1/1954	125.1	
5-73_5-72		858	858			Yes	8	1/1/1991	151.4	
5-74_5-73		858	858			Yes	8	1/1/1991	250.2	
5-75_5-73		858	858				8	1/1/1991	219.4	
63-53_63-54		858	858				8	1/1/2001	23.5	
63-54_63-55		858	858				8	1/1/2001	78.9	

Table 4

Updated Gravity Sewer Asset Management Plan Risk Scores and Supporting Information

** Lines in RED font have an updated Risk score that is greater that the 2015 GSAMP. Lines highlighted in GREY have "Highest" or "High" priority based or Structural quick rating, and were not included on a prior CIP list.

Pipe ID	VWHA Priority (For Reference Only)	2015 GSAMP Risk Score	2020 Risk Score	On 2016 CIP List	On 2016-17RR List	On CIPPriority 17-18 List	Diameter (in)	Install Date	Length (ft)	CVSan Comments
63-55_63-56		858	858				8	1/1/2001	172.9	
63-59_63-60		858	858				8	1/1/2001	81.5	
63-60_63-61		858	858				8	1/1/2001	142.6	
63-62_63-63		858	858				8	1/1/2001	77.6	
9-94_9-89		858	858				8	1/1/1952	128.0	
10-1_3-68		850	850			Yes	8	1/1/1951	226.6	
10-7_10-6		850	850			Yes	8	1/1/1952	112.0	
11-54_11-51		850	850			Yes	6	1/1/1944	270.2	
11-89_11-88		850	850				6	1/1/1948	128.5	
11-99_11-54		850	850			Yes	8	1/1/1980	140.2	
12-82_12-89		850	850				8	1/1/1963	71.8	
1-7_1-6		850	850			Yes	6	1/1/1944	24.3	
19-106_19-21		850	850				8	1/1/1967	86.3	
2-10_2-11		850	850			Yes	8	1/1/1956	154.4	
2-12_2-11		850	850			Yes	8	1/1/1956	136.9	
2-2_2-3		850	850			Yes	8	1/1/1957	278.2	
2-29_2-27		850	850			Yes	8	1/1/1957	68.8	
27-91_27-90		850	850				8	1/1/1952	196.2	
3-21_3-72		850	850				10	1/1/1964	303.7	
37-116Y_37-38		850	850				8	1/1/1970	95.1	
37-117Y_37-116Y		850	850				8	1/1/1970	20.1	
37-118Y_37-41		850	850				8	1/1/1970	125.9	
37-119R_37-118Y		850	850				6	1/1/1970	58.5	
3-72_3-61		850	850				10	1/1/1964	314.5	
37-43R_37-43		850	850				6	1/1/1970	64.8	
39-18_39-19		850	850				8	1/1/1975	236.5	
39-19_39-14		850	850				8	1/1/1974	479.1	
39-23_39-22		850	850				8	1/1/1973	353.3	
39-7_39-6		850	850				8	1/1/1975	342.3	
4-24_4-21		850	850			Yes	8	1/1/2003	209.0	
4-56_4-44		850	850				8	1/1/1979	163.1	
5-18_5-19		850	850				8	1/1/1954	96.0	
5-19_5-20		850	850				8	1/1/1954	184.9	
55-4_55-3		850	850				8	1/1/1973	98.4	
5-67_5-34		850	850			Yes	8	1/1/1976	223.2	
5-78_6-7		850	850			Yes	8	1/1/1996	300.7	
9-2_9-3		850	850			Yes	8	1/1/1965	292.9	
9-3_9-4		850	850			Yes	8	1/1/1965	100.5	
9-35_9-34		850	850			Yes	8	1/1/1953	220.5	
10-91R_10-90		800	800				8	1/1/1954	163.4	
11-38_11-37		800	800			Yes	8	1/1/1959	323.0	
11-41R_11-39		800	800			Yes	8	1/1/1975	268.3	
11-94R_11-95		800	800				6	1/1/1949	80.4	
12-103R_12-37		800	800			Yes	8	1/1/1954	155.8	
12-112_11-22		800	800			Yes	8	1/1/1959	273.1	
12-114_11-21		800	800			Yes	8	1/1/1959	199.0	
12-117R_12-112		800	800			Yes	8	1/1/1959	146.5	
12-20R_12-19		800	800				8	1/1/1962	343.9	
1-25R_1-12		800	800			Yes	8	1/1/1953	100.5	
13-102_13-96		800	800				8		95.1	
13-24_13-83		800	800				8	1/1/1957	199.3	
13-30_13-29		800	800			Yes	8	1/1/1957	315.4	
13-65_13-64		800	800				6	1/1/1950	292.4	
13-77_13-76		800	800				8	1/1/1950	268.9	
13-78_13-77		800	800				8	1/1/1950	300.4	
13-79_13-78		800	800				8	1/1/1950	70.0	
13-83_13-25		800	800				8	1/1/1957	115.3	
13-86_13-85		800	800				8	1/1/1976	208.8	
13-89_13-73		800	800				8	1/1/1984	260.4	
1-6_1-4		800	800			Yes	6	1/1/1949	162.3	
16-3_16-4		800	800				8	1/1/1966	81.7	
17-30R_17-29		800	800				8	1/1/1957	69.9	
17-33_17-32		800	800				8	1/1/1957	309.2	
17-35R_17-33		800	800				8	1/1/1957	137.8	
17-52_17-50		800	800				8	1/1/1952	170.5	
17-65_16-13		800	800				8	1/1/2004	186.0	
17-70_17-53		800	800				8	1/1/2012	54.3	
18-122_18-37		800	800				8	1/1/1998	73.3	
18-124_18-125		800	800				8	1/1/2004	195.1	
18-20R_18-19		800	800				8	1/1/1952	153.1	
18-28_19-31		800	800				8	1/1/1953	326.5	
18-3_17-64		800	800				8	1/1/1957	177.5	

Table 4

Updated Gravity Sewer Asset Management Plan Risk Scores and Supporting Information

** Lines in RED font have an updated Risk score that is greater that the 2015 GSAMP. Lines highlighted in GREY have "Highest" or "High" priority based or Structural quick rating, and were not included on a prior CIP list.

Pipe ID	VWHA Priority (For Reference Only)	2015 GSAMP Risk Score	2020 Risk Score	On 2016 CIP List	On 2016-17RR List	On CIPPriority 17-18 List	Diameter (in)	Install Date	Length (ft)	CVSan Comments
18-35_18-33		800	800				6	1/1/1964	155.3	
18-37_18-36		800	800				8	1/1/1998	231.0	
18-42_18-41		800	800				8	1/1/1950	280.2	
18-44R_18-45		800	800				8	1/1/1950	122.0	
18-47R_18-46		800	800				8	1/1/1950	79.5	
18-54_18-53		800	800				8	1/1/1952	117.9	
18-59_18-58		800	800				6	1/1/1947	47.8	
18-69_18-70		800	800				6	1/1/1950	200.7	
18-91R_18-92		800	800				8	1/1/1950	77.8	
19-13_19-16		800	800				6		29.1	
19-54R_19-53		800	800				8	1/1/1968	106.1	
19-76_19-75		800	800				8	1/1/1955	168.6	
19-89R_19-12		800	800				6	1/1/1955	50.6	
19-93_19-94		800	800				10	1/1/1984	221.7	
20-25R_20-24		800	800				8	1/1/1952	195.4	
22-18_22-21		800	800				8	1/1/1953	252.6	
2-28R_2-27		800	800			Yes	8	1/1/1957	184.5	
2-31R_2-29		800	800			Yes	8	1/1/1957	126.8	
27-101_27-100		800	800				8	1/1/1953	167.8	
27-108R_27-77		800	800				8	1/1/1954	66.1	
27-118_27-62		800	800				8	1/1/1998	195.2	
27-53_27-50		800	800				6	1/1/1948	160.3	
27-6R_27-107		800	800				6	1/1/1992	136.1	
27-75_27-74		800	800				6	1/1/1954	49.5	
27-95_27-97		800	800				8	1/1/1952	117.3	
28-103_28-104		800	800				8	1/1/1989	275.7	
28-109_28-110		800	800				8	1/1/2006	198.5	
28-46_28-47		800	800				10	1/1/1953	141.3	
28-48_28-45		800	800			Yes	8		87.9	
28-93_28-92		800	800				8	1/1/1988	285.1	
28-97_28-96		800	800				8	1/1/1993	155.7	
29-52_29-51		800	800				6	1/1/1962	300.7	
29-54R_29-52		800	800				6	1/1/1962	106.0	
29-87_29-86		800	800				8	1/1/1977	144.6	
29-90_29-87		800	800				8	1/1/1977	82.4	
30-29_30-28		800	800	Yes			8	1/1/1952	70.6	
30-32_30-31		800	800				8	1/1/1952	266.6	
30-33R_30-32		800	800				8	1/1/1952	79.2	
30-5_30-72		800	800			Yes	8	1/1/1957	225.2	
30-82_30-81		800	800			Yes	8	1/1/1954	123.4	
30-88_30-89		800	800				8	1/1/1983	69.1	
30-91_30-92		800	800			Yes	8	1/1/1990	197.7	
31-109_31-112		800	800				8		87.8	
31-110_31-111		800	800				8	1/1/1978	105.3	
31-37_31-36		800	800				8	1/1/1966	114.0	
31-66_31-64		800	800				8	1/1/1953	367.1	
3-45R_3-42		800	800			Yes	8	1/1/1960	105.0	
35-62_35-61		800	800				8	1/1/1952	138.7	
35-64_35-63		800	800				8	1/1/1951	98.7	
35-71_35-70		800	800				8	1/1/1952	94.2	
35-94_35-95		800	800				8	1/1/1989	37.9	
36-17_36-26		800	800				8	1/1/1958	247.2	
36-76_36-75		800	800				8	1/1/1959	181.8	
37-18_37-19		800	800				8	1/1/1952	39.4	
37-25_30-20		800	800				8	1/1/1957	300.9	
37-35S_37-36		800	800				6	1/1/1970	95.4	
37-42R_37-41		800	800				8	1/1/1970	193.1	
37-94_37-95		800	800				8	1/1/1988	246.1	
37-95_37-96		800	800				8	1/1/1988	261.6	
37-97_37-98		800	800				8	1/1/1988	226.3	
39-33_39-35		800	800				8	1/1/1978	170.3	
39-35_39-36		800	800				8	1/1/1978	265.5	
39-36_39-37		800	800				8	1/1/1978	267.6	
39-37_40-52		800	800				8	1/1/1978	297.1	
39-38_39-37		800	800				8	1/1/1978	199.3	
40-30_40-31		800	800				8	1/1/1978	327.8	
42-78_42-77		800	800				8	1/1/2000	282.8	
42-79_42-78		800	800				8	1/1/2000	124.6	
42-80_42-79		800	800				8	1/1/2000	301.9	
42-81_42-80		800	800				8	1/1/2000	294.0	
42-82_42-81		800	800				8	1/1/2000	301.6	
42-84_42-85		800	800				8		279.1	

Table 4

Updated Gravity Sewer Asset Management Plan Risk Scores and Supporting Information

** Lines in RED font have an updated Risk score that is greater that the 2015 GSAMP. Lines highlighted in GREY have "Highest" or "High" priority based or Structural quick rating, and were not included on a prior CIP list.

Pipe ID	VWHA Priority (For Reference Only)	2015 GSAMP Risk Score	2020 Risk Score	On 2016 CIP List	On 2016-17RR List	On CIPPriority 17-18 List	Diameter (in)	Install Date	Length (ft)	CVSan Comments
42-85_42-86		800	800				8		169.5	
43-31_37-96		800	800				8	1/1/1989	199.3	
43-32_43-31		800	800				8	1/1/1989	245.9	
43-40_43-41		800	800				15	1/1/1989	183.5	
43-52_43-8		800	800				8	1/1/1989	301.9	
43-54_43-53		800	800				8		27.9	
44-29_44-28		800	800				8	1/1/1985	204.1	
44-30_44-29		800	800				8	1/1/1985	246.6	
44-35_44-36		800	800				8	1/1/1985	236.9	
44-40_44-39		800	800				8	1/1/1985	225.1	
44-46_44-47		800	800				8	1/1/1985	308.2	
44-50_44-51		800	800				8	1/1/1985	55.0	
44-55_44-54		800	800				8	1/1/1986	145.3	
44-56_44-55		800	800				8	1/1/1986	127.7	
44-57_44-56		800	800				8	1/1/1986	198.5	
44-58_44-57		800	800				8	1/1/1986	216.8	
44-59_44-61		800	800				8	1/1/1986	123.2	
44-60_44-59		800	800				8	1/1/1986	93.0	
44-61_44-62		800	800				8	1/1/1986	276.8	
44-62_44-65		800	800				8	1/1/1986	141.5	
44-64_44-65		800	800				8	1/1/1986	91.0	
44-66_44-55		800	800				8	1/1/1986	154.2	
44-67_44-49		800	800				8	1/1/1987	80.8	
45-31_45-30		800	800				8	1/1/1995	189.1	
45-32_45-30		800	800				8	1/1/1995	324.3	
45-34_45-32		800	800				8	1/1/1995	155.1	
45-36_45-35		800	800				8	1/1/1995	329.1	
45-37_45-36		800	800				8	1/1/1995	316.5	
45-38_45-37		800	800				8	1/1/1995	306.7	
4-55_4-22		800	800	Yes		Yes	8	1/1/1944	215.7	
45-58_45-57		800	800				8	1/1/2005	127.1	
46-15_42-82		800	800				8	1/1/2000	300.4	
46-16_46-15		800	800				8	1/1/2000	178.0	
46-17_46-16		800	800				8	1/1/2000	302.0	
46-18_46-17		800	800				8	1/1/2000	293.2	
47-20_47-19		800	800				8	1/1/1983	125.9	
47-21_47-19		800	800				8	1/1/1983	264.8	
55-10_55-11		800	800				8	1/1/1979	255.4	
55-11_55-12		800	800				8	1/1/1979	147.5	
55-12_55-13		800	800				8	1/1/1979	265.9	
55-13_55-14		800	800				8	1/1/1979	296.3	
5-66R_5-53		800	800			Yes	8	1/1/1966	196.7	
61-13_61-9		800	800				8	1/1/1979	299.8	
61-8_61-7		800	800				8	1/1/1979	133.5	
61-9_61-8		800	800				8	1/1/1979	168.5	
62-1_61-13		800	800				8	1/1/1979	246.5	
62-14_62-13		800	800				8	1/1/1979	221.4	
62-3_62-2		800	800				8	1/1/1978	377.1	
62-33_62-35		800	800				8	1/1/1987	161.9	
62-4_62-3		800	800				8	1/1/1987	49.4	
62-48_62-49		800	800				8		374.5	
62-51_71-13		800	800				8		373.8	
62-6_62-5		800	800				8	1/1/1987	139.3	
62-7_62-6		800	800				8	1/1/1987	117.8	
62-7_62-8		800	800				8	1/1/1987	54.8	
62-8_62-5		800	800				8	1/1/1987	133.0	
63-13_63-17		800	800				8	1/1/1979	239.4	
63-14_63-13		800	800				8	1/1/1983	161.5	
63-17_63-18		800	800				8	1/1/1979	251.3	
63-18_62-57		800	800				8	1/1/1983	140.4	
63-37_72-21		800	800				8		277.2	
63-38_62-55		800	800				8		150.6	
63-42_63-43		800	800				8	1/1/2001	83.2	
63-43_63-44		800	800				8	1/1/2001	242.5	
63-45_63-46		800	800				8	1/1/2001	161.8	
63-46_63-47		800	800				8	1/1/2001	254.3	
63-49_63-50		800	800				8	1/1/2001	95.3	
63-50_63-51		800	800				8	1/1/2001	39.1	
63-58_63-64		800	800				8	1/1/2001	216.4	
63-9_62-14		800	800				8	1/1/1979	155.3	
64-1_64-2		800	800				8	1/1/2001	47.8	
64-10_64-8		800	800				8	1/1/2001	233.8	

Table 4

Updated Gravity Sewer Asset Management Plan Risk Scores and Supporting Information

** Lines in RED font have an updated Risk score that is greater that the 2015 GSAMP. Lines highlighted in GREY have "Highest" or "High" priority based or Structural quick rating, and were not included on a prior CIP list.

Pipe ID	VWHA Priority (For Reference Only)	2015 GSAMP Risk Score	2020 Risk Score	On 2016 CIP List	On 2016-17RR List	On CIPPriority 17-18 List	Diameter (in)	Install Date	Length (ft)	CVSan Comments
64-12_64-13		800	800				8	1/1/2001	353.9	
64-13_64-14		800	800				8	1/1/2001	271.0	
64-14_63-68		800	800				8	1/1/2001	249.3	
64-2_64-3		800	800				8	1/1/2001	58.3	
64-3_64-4		800	800				8	1/1/2001	73.3	
64-5_64-4		800	800				8	1/1/2001	60.8	
64-6_64-5		800	800				8	1/1/2001	103.1	
64-7_64-6		800	800				8	1/1/2001	207.1	
64-8_64-7		800	800				8	1/1/2001	110.3	
64-9_64-10		800	800				8	1/1/2001	79.8	
71-14_71-15		800	800				8		236.9	
71-15_71-16		800	800				8		207.8	
71-17_71-18		800	800				8		320.4	
71-26_71-27		800	800				8		221.3	
71-27_71-28		800	800				8		276.7	
71-3_62-55		800	800				8		242.0	
71-4_71-3		800	800				8		282.3	
71-8_71-9		800	800				8		212.0	
72-11_72-10		800	800				8		107.3	
72-12_72-14		800	800				8		68.3	
72-18_72-14		800	800				8		140.1	
72-20_72-18		800	800				8		240.2	
72-21_72-20		800	800				8		290.1	
72-23_63-40		800	800				8		383.0	
72-24_72-25		800	800				8		343.6	
72-25_72-26		800	800				8		361.7	
72-26_72-27		800	800				8		299.1	
72-27_71-8		800	800				8		250.7	
72-28_72-27		800	800				8		187.2	
72-29_71-7		800	800				8		429.0	
72-30_72-29		800	800				8		345.6	
72-31_72-30		800	800				8		268.5	
72-32_72-33		800	800				8		218.6	
72-34_72-33		800	800				8		353.2	
72-5_72-6		800	800			Yes	8		207.7	
72-7_72-9		800	800				8		170.4	
72-9_72-10		800	800				8		304.6	
8-13_8-12		800	800				8	1/1/1966	288.2	
8-22_8-21		800	800				8	1/1/1959	175.3	
8-23_8-22		800	800				8	1/1/1959	298.7	
8-24_8-23		800	800				8	1/1/1959	153.7	
8-25_8-24		800	800				8	1/1/1959	282.5	
8-29_8-19		800	800				8	1/1/1959	197.4	
8-37_8-36		800	800				8	1/1/1961	296.8	
8-41_8-39		800	800				8	1/1/1961	188.3	
8-42_8-41		800	800				8	1/1/1959	399.5	
8-5_8-4		800	800				8	1/1/1966	301.6	
8-50_8-49		800	800				8	1/1/1952	190.8	
8-54_9-126		800	800				8	1/1/1986	403.3	
9-109_9-108		800	800			Yes	8	1/1/1975	250.8	
9-10R_9-9		800	800				8	1/1/1952	84.0	
9-115_9-116		800	800				8	1/1/1979	128.0	
9-116_9-118		800	800				8	1/1/1979	234.0	
9-117_9-118		800	800				8	1/1/1979	109.5	
9-127_10-9		800	800			Yes	8	1/1/1955	150.9	
9-1R_9-2		800	800			Yes	8	1/1/1965	73.7	
9-69_9-70		800	800				8	1/1/1952	216.5	
9-73_9-74		800	800				8	1/1/1952	116.1	
9-77_9-78		800	800				8	1/1/1952	208.8	
9-78_9-128		800	800				8	1/1/1952	153.0	
9-86_9-83		800	800				8	1/1/1952	145.0	
9-87_9-86		800	800				8	1/1/1952	181.5	
9-88_9-87		800	800				8	1/1/1952	200.6	
11-22_11-21		770	770			Yes	8	1/1/1959	258.6	
12-27_12-108		770	770				12	1/1/1952	278.5	
2-15_3-70		770	770			Yes	8	1/1/1961	596.0	
30-116_30-115		770	770				8	1/1/2008	56.9	
30-117_30-116		770	770				8	1/1/2008	33.0	
3-3_3-4		770	770				6	1/1/1950	37.9	
3-33_3-35		770	770			Yes	6	1/1/1944	152.3	
3-4_3-5		770	770			Yes	6	1/1/1944	47.0	
3-65_3-66		770	770			Yes	8	1/1/1951	270.2	

Table 4

Updated Gravity Sewer Asset Management Plan Risk Scores and Supporting Information

** Lines in RED font have an updated Risk score that is greater that the 2015 GSAMP. Lines highlighted in GREY have "Highest" or "High" priority based or Structural quick rating, and were not included on a prior CIP list.

Pipe ID	VWHA Priority (For Reference Only)	2015 GSAMP Risk Score	2020 Risk Score	On 2016 CIP List	On 2016-17RR List	On CIPPriority 17-18 List	Diameter (in)	Install Date	Length (ft)	CVSan Comments
4-37_4-38		770	770			Yes	8	1/1/1960	437.1	
4-40_5-77		770	770			Yes	8	1/1/1974	315.0	
4-46_4-45		770	770				8	1/1/1964	303.7	
63-51_63-66		770	770				8	1/1/2001	296.5	
63-66_63-67		770	770				8	1/1/2001	230.5	
63-67_63-68		770	770				8	1/1/2001	305.6	
63-68_63-69		770	770				8	1/1/2001	278.5	
63-69_72-35		770	770				8	1/1/2001	295.3	
72-35_72-17		770	770				8	1/1/2001	297.9	
9-60_9-53		770	770				8	1/1/1952	167.8	
20-17_20-99		748	748				8		34.1	
21-115_21-112		748	748				8	1/1/2010	69.6	
10-77R_10-76		700	700				8	1/1/1977	25.4	
12-66_12-98		700	700				8	1/1/1980	63.2	
12-98_12-65		700	700				8	1/1/1980	61.3	
31-115_31-10		700	700				8	1/1/1981	240.6	
31-35_31-34		700	700			Yes	8	1/1/1982	205.0	
31-50_31-49		700	700				8	1/1/1982	130.2	
38-10_38-15		700	700				10	1/1/1982	372.9	
39-12_39-13		700	700				8	1/1/1976	319.5	
39-13_40-57		700	700				8	1/1/1976	224.6	
40-56_40-57		700	700				8	1/1/1976	147.6	
40-57_40-19		700	700				8	1/1/1976	138.0	
45-35_45-34		700	700				8	1/1/1985	26.0	
55-21_63-4		700	700				8	1/1/1979	114.2	
63-73_55-20		700	700				8	1/1/1979	228.9	
63-73_63-5		700	700				8	1/1/1979	305.7	
6-8_13-87		700	700				8	1/1/1976	117.7	
11-39_11-38		682	682			Yes	8	1/1/1975	146.5	
12-90_12-91		682	682				8	1/1/1975	127.4	
31-120_31-119		682	682				8		26.0	
31-121_31-120		682	682				8		109.1	
37-105_37-113		682	682				8	1/1/1987	94.5	
4-34_4-35		682	682				8	1/1/1960	201.3	
4-35_4-36		682	682				8	1/1/1960	42.9	
44-68_44-69		682	682				8	1/1/1987	34.8	
45-20_45-19		682	682				8	1/1/1987	83.2	
45-21_45-20		682	682				8	1/1/1990	114.1	
45-22_45-21		682	682				8	1/1/1990	47.0	
46-8_46-7		682	682				8	1/1/1989	79.0	
5-48_5-50		682	682			Yes	8	1/1/1962	118.4	
6-3_6-2		682	682			Yes	8	1/1/1996	112.1	
6-4_6-3		682	682				8	1/1/1996	205.8	
10-137_10-136		550	550			Yes	12	1/1/2009	42.6	
10-2_10-1		550	550			Yes	8	1/1/1951	106.6	
10-3_10-1		550	550			Yes	8	1/1/1951	178.5	
10-4_10-3		550	550			Yes	8	1/1/1951	99.8	
10-6_10-4		550	550			Yes	8	1/1/1952	100.0	
10-61_10-60		550	550			Yes	8	1/1/1952	91.5	
10-79_10-78		550	550			Yes	8	1/1/1955	98.5	
10-80_10-79		550	550			Yes	8	1/1/1955	268.2	
10-9_10-10		550	550			Yes	8	1/1/1955	392.2	
10-90_10-105		550	550			Yes	8	1/1/1954	44.7	
1-11_1-7		550	550			Yes	6	1/1/1953	117.5	
11-113_12-34		550	550			Yes	8	1/1/1954	124.4	
1-12_1-11		550	550			Yes	8	1/1/1953	164.3	
11-37_11-22		550	550			Yes	8	1/1/1959	124.9	
1-14_1-13		550	550			Yes	8	1/1/1958	74.1	
11-65_11-64		550	550				6	1/1/1950	231.2	
11-66_11-65		550	550				6	1/1/1950	156.2	
11-68_11-64		550	550				6	1/1/1950	132.1	
11-69_11-68		550	550				6	1/1/1950	185.4	
1-18_1-19		550	550				8		87.1	
1-19_1-20		550	550				8	1/1/1999	63.7	
11-91_11-86		550	550				8	1/1/2008	300.9	
1-20_1-21		550	550				8		106.2	
1-21_3-95		550	550				8	1/1/1999	157.1	
12-21_12-22		550	550			Yes	8	1/1/1962	215.4	
12-22_12-19		550	550			Yes	8	1/1/1962	120.6	
12-23_12-26		550	550				6	1/1/1977	100.3	
12-33_12-32		550	550			Yes	8	1/1/1954	183.9	
12-34_12-33		550	550			Yes	8	1/1/1954	186.6	

Table 4

Updated Gravity Sewer Asset Management Plan Risk Scores and Supporting Information

** Lines in RED font have an updated Risk score that is greater that the 2015 GSAMP. Lines highlighted in GREY have "Highest" or "High" priority based or Structural quick rating, and were not included on a prior CIP list.

Pipe ID	VWHA Priority (For Reference Only)	2015 GSAMP Risk Score	2020 Risk Score	On 2016 CIP List	On 2016-17RR List	On CIPPriority 17-18 List	Diameter (in)	Install Date	Length (ft)	CVSan Comments
12-37_12-34		550	550			Yes	8	1/1/1954	290.8	
12-79_13-4		550	550				8	1/1/1948	378.7	
12-80_12-79		550	550				8	1/1/1953	345.2	Marked by CSM, debris?
12-81_12-80		550	550			Yes	8	1/1/1953	239.0	
12-83_12-81		550	550			Yes	8	1/1/1953	163.0	
12-99_12-90		550	550				8	1/1/1975	67.0	
1-3_1-4		550	550			Yes	6	1/1/1949	257.6	
18-130_18-123		550	550				8	1/1/1955	47.4	
18-55_18-54		550	550				8	1/1/1952	194.0	
19-21_19-20		550	550				8		155.7	
2-1_2-14		550	550	Yes		Yes	8	1/1/1957	158.1	
2-27_2-26		550	550			Yes	8	1/1/1957	268.6	
2-3_2-4		550	550				8	1/1/1956	125.4	
2-32S_3-74		550	550			Yes	8	1/1/1956	175.6	
26-47R_26-45		550	550				8	1/1/1963	53.3	
27-106_27-75		550	550				8	1/1/1954	189.2	
27-77_27-106		550	550				8	1/1/1954	207.7	
27-78_27-77		550	550				8	1/1/1954	94.1	
27-87R_27-86		550	550				8	1/1/1956	98.9	
29-14R_29-16		550	550				8	1/1/1951	82.9	
3-10_3-9		550	550			Yes	8	1/1/1956	169.3	
3-11_3-10		550	550			Yes	8	1/1/1956	106.6	
3-20_3-19		550	550			Yes	8	1/1/1959	225.3	
3-24_3-23		550	550			Yes	8	1/1/1955	305.1	
3-29_3-28		550	550			Yes	8	1/1/1959	45.6	
3-31_3-80		550	550			Yes	6	1/1/1988	120.3	
3-48_3-47		550	550			Yes	8	1/1/1955	128.9	
3-56_3-55		550	550			Yes	8	1/1/1955	171.2	
3-61_3-84		550	550				10	1/1/1964	43.9	
37-103_37-104		550	550				8	1/1/1987	65.6	
37-104_37-105		550	550				8	1/1/1987	166.8	
37-106_37-105		550	550				8	1/1/1987	156.6	
37-36_37-38		550	550				8		85.5	
3-80_3-32		550	550			Yes	6	1/1/1988	131.5	
3-81_3-80		550	550			Yes	8	1/1/1988	253.4	
3-82_3-81		550	550			Yes	8	1/1/1988	67.6	
3-83_3-81		550	550			Yes	8	1/1/1988	252.8	
3-89_3-82		550	550			Yes	8	1/1/1999	121.9	
3-90_3-89		550	550			Yes	8	1/1/1999	118.9	
3-91_3-90		550	550			Yes	8	1/1/1999	64.4	
3-92_3-91		550	550			Yes	8	1/1/1999	118.1	
39-21_39-22		550	550				8	1/1/1973	408.7	
3-93_3-92		550	550			Yes	8	1/1/1999	78.9	
3-94_3-93		550	550			Yes	8	1/1/1999	150.4	
3-95_3-96		550	550				8	1/1/1999	184.9	
4-11_4-10		550	550				6	1/1/1944	97.0	
4-21_11-118		550	550			Yes	8	1/1/2008	336.3	
4-22_4-21		550	550			Yes	8	1/1/2008	95.6	
4-23_4-24		550	550			Yes	8	1/1/2003	91.2	
4-25_4-24		550	550			Yes	8	1/1/2003	84.3	
42-70_42-69		550	550				8	1/1/1980	98.6	
42-86_42-87		550	550				8		96.2	
4-41_4-40		550	550			Yes	8	1/1/1976	99.0	
45-23R_45-24		550	550				4	1/1/1990	13.4	
45-24_45-25		550	550				8	1/1/1990	275.9	
4-57_4-11		550	550				6	1/1/1992	55.5	
4-58_4-57		550	550			Yes	8	1/1/1992	232.0	
4-59_4-58		550	550			Yes	8	1/1/1992	219.4	
4-60_4-59		550	550			Yes	8	1/1/1992	220.4	
4-61_4-60		550	550				8	1/1/1992	118.8	
4-61_4-62		550	550			Yes	8	1/1/1992	120.8	
4-62_4-64		550	550			Yes	8	1/1/1992	199.6	
4-63_4-62		550	550			Yes	8	1/1/1992	70.9	
4-64_4-65		550	550				8	1/1/1992	198.5	
4-65_4-58		550	550			Yes	8	1/1/1992	303.1	
4-66_5-71		550	550				8	1/1/1988	111.2	
4-67_4-66		550	550				8	1/1/1988	122.0	
4-69_4-68		550	550			Yes	8	1/1/1990	109.1	
4-70_4-71		550	550			Yes	8	1/1/1990	133.6	
4-71_4-69		550	550			Yes	8	1/1/1990	219.4	
4-72_4-71		550	550			Yes	8	1/1/1990	267.2	
4-73_4-72		550	550			Yes	8	1/1/1990	104.1	

Table 4

Updated Gravity Sewer Asset Management Plan Risk Scores and Supporting Information

** Lines in RED font have an updated Risk score that is greater that the 2015 GSAMP. Lines highlighted in GREY have "Highest" or "High" priority based or Structural quick rating, and were not included on a prior CIP list.

Pipe ID	VWHA Priority (For Reference Only)	2015 GSAMP Risk Score	2020 Risk Score	On 2016 CIP List	On 2016-17RR List	On CIPPriority 17-18 List	Diameter (in)	Install Date	Length (ft)	CVSan Comments
4-74_4-72		550	550			Yes	8	1/1/1990	98.8	
4-75_4-76		550	550			Yes	8	1/1/1990	267.6	
4-76_4-77		550	550			Yes	8	1/1/1990	117.9	
4-77_5-82		550	550			Yes	8	1/1/1990	163.0	
5-11_5-5		550	550				8	1/1/1960	160.7	
5-12_5-11		550	550			Yes	8	1/1/1960	348.5	
5-15_5-12		550	550			Yes	8	1/1/1960	525.5	
5-17_5-18		550	550				8	1/1/1954	119.0	
5-20_5-22		550	550				8	1/1/1954	173.3	
5-21_5-20		550	550				8	1/1/1963	130.8	
5-32_5-31		550	550				8	1/1/1956	207.6	
5-33_5-32		550	550			Yes	8	1/1/1956	147.8	
5-34_5-33		550	550			Yes	8	1/1/1956	211.0	
5-37_5-38		550	550			Yes	8	1/1/1964	243.6	
5-4_5-2		550	550				8	1/1/1960	100.4	
5-42_5-43		550	550			Yes	8	1/1/1965	147.8	
5-44_5-43		550	550			Yes	8	1/1/1965	337.3	
5-5_5-4		550	550				8	1/1/1960	121.9	
5-53_5-54		550	550			Yes	8	1/1/1966	267.2	
5-54_5-55		550	550				8	1/1/1966	230.2	
5-55_5-56		550	550				8	1/1/1966	281.1	
5-6_5-5		550	550				8	1/1/1960	218.5	
5-7_5-6		550	550				8	1/1/1960	118.0	
5-76_5-75		550	550			Yes	8	1/1/1991	301.9	
5-78_6-9		550	550			Yes	8	1/1/1996	210.4	
5-8_5-7		550	550				8	1/1/1960	107.2	
5-82_5-3		550	550			Yes	8	1/1/1990	53.0	
5-9_5-8		550	550			Yes	8	1/1/1960	251.0	
6-1_5-74		550	550				8	1/1/1991	305.9	
61-10_61-8		550	550				8	1/1/1987	109.3	
61-11_61-10		550	550				8	1/1/1987	220.4	
61-12_61-11		550	550				8	1/1/1987	196.0	
63-44_64-8		550	550				8	1/1/2001	277.3	
63-47_63-44		550	550				8	1/1/2001	20.0	
63-56_63-57		550	550				8	1/1/2001	35.5	
63-57_63-58		550	550				8	1/1/2001	23.3	
63-63_63-64		550	550				8	1/1/2001	109.3	
63-64_63-65		550	550				8	1/1/2001	121.6	
63-65_63-66		550	550				8	1/1/2001	56.9	
64-16_64-10		550	550				8	1/1/2001	99.9	
6-5_6-4		550	550				8	1/1/1996	111.0	
6-6_6-5		550	550			Yes	8	1/1/1996	144.4	
6-7_6-6		550	550			Yes	8	1/1/1996	93.6	
6-9_6-7		550	550			Yes	0	1/1/1996	150.0	
71-29_71-30		550	550				8		291.7	
72-16_72-15		550	550				8		106.7	
72-3_72-2		550	550				8		192.9	
8-20_8-19		550	550				8	1/1/1959	278.0	
9-11_9-12		550	550			Yes	8	1/1/1952	251.5	
9-12_3-79		550	550			Yes	8	1/1/1952	159.9	
9-31_9-33		550	550			Yes	8	1/1/1952	152.5	
9-33_10-7		550	550			Yes	8	1/1/1952	212.1	
9-39_9-127		550	550			Yes	8	1/1/1955	171.3	
9-4_9-5		550	550			Yes	8	1/1/1954	135.4	
9-76_9-77		550	550				8	1/1/1952	98.8	
30-21_30-12	High	8096	8648				10	1/1/1953	251.7	DP 93 Replaced
19-45_20-7	High	7120	8188	Yes	Yes	Yes	8	1/1/1959	109.0	Santa Maria Project
30-18_30-17	High	6072	6072	Yes			10	1/1/1953	147.1	DP 93 Replaced
30-49_30-52	High	3738	5874				10	1/1/1954	381.1	
28-42_28-41	High	4810	5590	Yes			10	1/1/1953	137.3	DP 95 Spot Repair
27-103_27-127	High	3276	5148				6		27.5	
31-45_31-91	High	4366	5074	Yes		Yes	6		285.5	
63-33_63-21	High	3344	4256				8	1/1/1979	276.0	
30-11_30-27	High	3038	4214				6	1/1/1973	341.8	DP 93 Abandoned
23-68R_23-66A	High	3420	3420				6	1/1/1947	101.7	
27-57_28-3	High	3036	3036				6	1/1/1944	373.1	
19-63_19-62	High	2590	3010			Yes	6	1/1/1948	367.3	
5-27_5-24	High	2496	2964				8	1/1/1962	173.7	DP 93 Replaced
32-20_32-38	High	1922	2666				6	1/1/1955	194.2	
35-1R_35-2	High	2480	2666				8	1/1/1953	163.5	Marked by CSM, easement
11-7_11-8	High	2106	2574			Yes	6	1/1/1965	298.9	
18-40_18-39	High	2170	2356				8	1/1/1950	158.8	

Table 4

Updated Gravity Sewer Asset Management Plan Risk Scores and Supporting Information

** Lines in RED font have an updated Risk score that is greater that the 2015 GSAMP. Lines highlighted in GREY have "Highest" or "High" priority based or Structural quick rating, and were not included on a prior CIP list.

Pipe ID	VWHA Priority (For Reference Only)	2015 GSAMP Risk Score	2020 Risk Score	On 2016 CIP List	On 2016-17RR List	On CIPPriority 17-18 List	Diameter (in)	Install Date	Length (ft)	CVSan Comments
2-16_3-73	High	1984	2356			Yes	8	1/1/1956	481.0	
2-17_2-16	High	1984	2356			Yes	8	1/1/1956	180.2	
27-58_27-57	High	2184	2184				6	1/1/1944	531.1	
22-91_22-109	High	2000	2150				6	1/1/1965	326.3	
30-27_30-39	High	1850	2150				6		281.3	DP 93 Abandoned
9-6_9-7	High	2150	2150			Yes	8	1/1/1952	200.2	
37-108R_36-77	High	1288	2116			Yes	8	1/1/1982	164.4	DP 92 Point Repair
3-44R_3-43	High	1674	2046				6	1/1/1964	153.9	
71-9_71-10	High	1540	1960				8		306.3	
35-3_35-2	High	1736	1736				8	1/1/1953	45.8	Marked by CSM, easement
10-62_10-61	High	1350	1650			Yes	8	1/1/1952	134.1	
3-9_3-8	High	1050	1650			Yes	8	1/1/1956	444.0	
9-8_9-9	High	1050	1650			Yes	8	1/1/1952	239.6	
9-9_9-11	High	1350	1650			Yes	8	1/1/1952	110.8	
10-60_10-59	High	1426	1426			Yes	8	1/1/1952	105.3	
27-59_27-58	High	1250	1400				8	1/1/1957	73.2	
33-1_34-37	High	1400	1400				8	1/1/1955	283.7	
33-25_33-24	High	950	1400				8	1/1/1981	357.4	
34-37_34-36	High	1400	1400				8	1/1/1955	320.3	
35-4_35-3	High	1400	1400				8	1/1/1953	125.0	
31-22R_31-23	High	1150	1150				8	1/1/1955	100.0	
31-53_31-52	High	1150	1150				6	1/1/1946	115.7	
3-27_3-28	High	550	1150			Yes	8	1/1/1959	271.5	
3-54_3-52	High	1000	1150			Yes	8	1/1/1959	224.9	
22-57_22-86	Highest	6000	6450	Yes	Yes	Yes	18	1/1/1950	312.5	DP 92 Point Repair
24-5_24-4	Highest	5254	6106	Yes			8	1/1/1944	407.4	ALCO Moratorium 2023
23-98_23-96	Highest	4636	4636			Yes	6		557.7	ALCO Moratorium 2023
47-32_47-6	Highest	2888	4256				8	1/1/1979	167.5	
23-99_23-98	Highest	4104	4104			Yes	6	1/1/1944	534.5	ALCO Moratorium 2023
32-21_32-37	Highest	3500	3800	Yes			6	1/1/1949	252.8	
23-111_24-5	Highest	2392	3496			Yes	8	1/1/1944	216.1	ALCO Moratorium 2023
23-110_23-111	Highest	2028	2964			Yes	8	1/1/1944	177.9	ALCO Moratorium 2023
24-6_23-110	Highest	1638	2574				8	1/1/1944	371.8	ALCO Moratorium 2023
34-23_34-54	Highest	2240	2240				8	1/1/1955	221.3	DP 95 Replaced
32-18_32-20	Highest	2000	2150				8		384.7	
11-92_11-91	Highest	1600	1900				6	1/1/1948	369.9	DP 95 Replaced
25-6_25-4	Highest	1050	1650				8	1/1/1965	145.2	
3-43_3-42	Highest	850	1150			Yes	8	1/1/1964	274.1	
31-5_31-4	Low	4590	5610				15	1/1/1954	563.7	
30-16_30-21	Low	3950	5372				10	1/1/1953	121.0	
30-17_30-16	Low	4266	5214				10	1/1/1953	149.3	
30-28_30-40	Low	3960	3960				10		168.0	
10-108_10-50	Low	3016	3640				8	1/1/1980	170.6	
14-21R_14-22	Low	3404	3404				8	1/1/1957	301.6	
30-38_30-37	Low	3300	3300				15	1/1/1964	50.8	
27-7_27-12	Low	3150	3150				6	1/1/1959	450.4	
10-114_10-102	Low	2132	2870			Yes	8	1/1/1960	155.4	
30-13R_30-11	Low	1932	2760				6	1/1/1944	183.9	
10-76_10-75	Low	2496	2730				6	1/1/1950	244.4	
18-109_18-108	Low	2294	2480			Yes	8	1/1/1961	239.6	DP 95 Replaced
2-5_2-6	Low	1922	2480			Yes	8	1/1/1956	74.2	
33-11_33-12	Low	2090	2420				8	1/1/1979	279.9	
32-17_32-18	Low	1922	2294				8		239.0	
34-54_34-25	Low	2240	2240				8	1/1/1955	80.3	
2-6_2-7	Low	1612	2170			Yes	8	1/1/1956	256.6	
2-7_2-8	Low	1612	2170			Yes	8	1/1/1956	174.7	
21-33_21-31	Low	2046	2046				8	1/1/1951	406.2	
18-12R_18-11	Low	1612	1984				6	1/1/1955	41.9	
2-19_2-17	Low	1612	1984			Yes	8	1/1/1956	311.2	
10-103R_10-46	Low	1716	1950				8		89.1	
23-130_23-101	Low	1900	1900				8		334.5	
3-49_3-48	Low	1550	1850			Yes	8	1/1/1955	127.1	
11-8_11-9	Low	1012	1840			Yes	8	1/1/1944	267.0	
18-46_18-40	Low	1750	1750				8	1/1/1940	235.3	
31-58_31-67	Low	1600	1750				8	1/1/1954	235.3	
31-64_32-12	Low	1750	1750				8	1/1/1953	167.4	
32-39R_32-18	Low	1600	1750			Yes	6		119.7	
41-11_42-17	Low	1674	1674				8		279.3	
11-56_11-8	Low	1078	1666			Yes	6	1/1/1944	184.4	
33-2_33-1	Low	1650	1650				8	1/1/1955	326.4	
3-12R_3-11	Low	1300	1600			Yes	8	1/1/1956	220.0	
3-79_3-69	Low	1050	1500			Yes	8	1/1/1951	190.4	

Table 4

Updated Gravity Sewer Asset Management Plan Risk Scores and Supporting Information

** Lines in RED font have an updated Risk score that is greater that the 2015 GSAMP. Lines highlighted in GREY have "Highest" or "High" priority based or Structural quick rating, and were not included on a prior CIP list.

Pipe ID	VWHA Priority (For Reference Only)	2015 GSAMP Risk Score	2020 Risk Score	On 2016 CIP List	On 2016-17RR List	On CIPPriority 17-18 List	Diameter (in)	Install Date	Length (ft)	CVSan Comments
3-51_3-48	Low	1426	1426			Yes	8	1/1/1955	75.8	DP 95 Replaced
3-47_3-55	Low	1050	1350			Yes	8	1/1/1955	252.3	
13-80R_13-79	Low	800	1250				8	1/1/1950	110.2	
10-5_10-4	Low	1150	1150				8	1/1/1951	177.5	
11-6_11-2	Low	1150	1150				8		133.3	
71-5_62-50	Low	1150	1150				8		363.8	
2-14R_2-13	Low	800	1100				8	1/1/1957	462.3	
62-52_62-51	Low	800	1100				8		269.5	
2-4_2-5	Low	682	1054			Yes	8	1/1/1956	123.0	
11-1_11-6	Low	550	1000				8	1/1/1956	145.8	
11-4_11-5	Low	550	1000			Yes	8	1/1/1965	215.1	
9-7_9-8	Low	550	1000			Yes	8	1/1/1952	188.2	
11-5_11-55	Low	850	850			Yes	8	1/1/1965	340.1	
42-67_42-3	Medium	7070	9494	Yes			12	1/1/1990	56.5	Marked by CSM, ACP Pipe
42-3_42-2	Medium	7070	7676				12	1/1/1960	185.6	ACP Pipe
13-59_13-57	Medium	7426	7426				10	1/1/1940	82.6	Downstream of EBMUD Repair
30-47_30-49	Medium	7298	7298				10	1/1/1954	72.0	crosses CV BLVD
23-29_23-33	Medium	4800	6240	Yes			8	1/1/1955	189.1	
26-8_26-17	Medium	3844	5332				8	1/1/1960	263.7	DP 95 Replaced
30-52_31-6	Medium	3360	5280				10		319.0	
20-68_21-3	Medium	5246	5246	Yes		Yes	6	1/1/1950	458.4	
44-21_44-20	Medium	3538	4636				8	1/1/1979	143.0	
22-100_22-101	Medium	4020	4422				8	1/1/1956	216.7	
45-4_45-5	Medium	3510	4290				8	1/1/1964	218.4	
28-3_28-2	Medium	4214	4214				8		220.7	
28-63_28-62	Medium	3038	4214	Yes			6	1/1/1944	383.2	
47-8_33-10	Medium	2622	3864				8	1/1/1979	258.7	
30-65R_21-23	Medium	2548	3724	Yes			6	1/1/1967	309.0	Marked by CSM, void
41-2_41-3	Medium	3430	3724				8	1/1/1960	268.1	
42-13_42-12	Medium	2548	3724				8	1/1/1960	307.0	
42-12_42-11	Medium	3360	3696				8	1/1/1960	199.6	
11-6R_11-7	Medium	2310	3630			Yes	8	1/1/1965	423.2	
42-64_42-62	Medium	2268	3564				8	1/1/1990	309.3	
15-1_15-2	Medium	2944	3496			Yes	6	1/1/1947	528.7	
28-64_28-65	Medium	2944	3496				6		540.5	
9-98_9-97	Medium	2392	3496				8	1/1/1952	165.7	
9-99R_9-98	Medium	2392	3496				8	1/1/1952	224.0	
23-66A_23-66	Medium	3420	3420				6	1/1/1947	148.5	
23-67R_23-66A	Medium	3420	3420				6	1/1/1947	174.9	
40-8_41-1	Medium	2940	3234				8	1/1/1960	301.8	
41-1_41-2	Medium	2940	3234				8	1/1/1960	332.5	
47-29_47-30	Medium	2128	3136				8	1/1/1980	279.0	
47-4_47-5	Medium	2128	3136				8	1/1/1979	330.8	
47-5_47-6	Medium	2128	3136			Yes	8	1/1/1979	303.4	
34-34_34-33	Medium	3036	3036				8	1/1/1954	432.3	
19-61_19-60	Medium	2590	3010		Yes		6	1/1/1948	110.3	
19-67_19-60	Medium	3010	3010	Yes	Yes		6	1/1/1948	272.1	
13-43_13-44	Medium	2720	2924				8	1/1/1940	207.3	
28-69_28-71	Medium	1922	2666			Yes	6	1/1/1945	187.2	Marked by CSM, easement
10-106_11-7	Medium	2106	2574			Yes	6	1/1/1944	264.1	
34-31_34-28	Medium	2574	2574				8	1/1/1954	118.0	
40-9_40-5	Medium	1950	2184				8	1/1/1959	203.9	
41-28_40-45	Medium	1482	2184				8	1/1/1978	199.0	
44-27_44-26	Medium	1550	2150				8	1/1/1985	276.5	
19-82_19-81	Medium	1860	2046			Yes	8	1/1/1956	131.8	
47-2_47-3	Medium	1330	1960				8	1/1/1979	269.2	
48-22_48-21	Medium	1330	1960				8	1/1/1984	268.4	
10-63R_10-62	Medium	1300	1900			Yes	8	1/1/1952	116.8	
3-14_3-15	Medium	1300	1900			Yes	8	1/1/1959	291.5	
32-15_32-16	Medium	1300	1900				8		107.9	
3-50R_3-49	Medium	1900	1900			Yes	8	1/1/1955	188.9	
39-10_39-8	Medium	1750	1900				8	1/1/1960	486.5	
9-80_9-81	Medium	1300	1900			Yes	8	1/1/1952	129.9	
39-17_39-16	Medium	1364	1736				8	1/1/1975	165.4	
26-70_27-7	Medium	1500	1650				8	1/1/1960	322.4	
3-28_3-22	Medium	1050	1650			Yes	8	1/1/1959	262.4	
48-9_48-8	Medium	1200	1650				8	1/1/1984	276.5	
2-8_2-9	Medium	1240	1426			Yes	8	1/1/1956	99.0	
42-17_42-16	Medium	1426	1426				8		92.3	
42-46_42-15	Medium	1426	1426				8		49.3	
27-60_27-59	Medium	1250	1400				8	1/1/1957	75.1	
31-111_31-109	Medium	800	1400				8	1/1/1978	207.0	

Table 4

Updated Gravity Sewer Asset Management Plan Risk Scores and Supporting Information

** Lines in RED font have an updated Risk score that is greater that the 2015 GSAMP. Lines highlighted in GREY have "Highest" or "High" priority based or Structural quick rating, and were not included on a prior CIP list.

Pipe ID	VWHA Priority (For Reference Only)	2015 GSAMP Risk Score	2020 Risk Score	On 2016 CIP List	On 2016-17RR List	On CIPPriority 17-18 List	Diameter (in)	Install Date	Length (ft)	CVSan Comments
33-23_33-2	Medium	950	1400				8	1/1/1981	353.1	
40-10_40-9	Medium	1250	1400				8	1/1/1959	251.8	
40-54_40-55	Medium	950	1400				8	1/1/1978	349.0	
30-115_30-114	Medium	550	1150				8	1/1/2008	119.1	
3-26_3-27	Medium	1000	1150			Yes	8	1/1/1959	233.6	
39-14_39-10	Medium	1000	1150				8	1/1/1960	287.4	
39-20_39-19	Medium	850	1150				8	1/1/1974	333.0	

(THIS PAGE INTENTIONALLY LEFT BLANK)

APPENDIX H

Pump Station Assest Management Pan

CASTRO VALLEY SANITARY DISTRICT

Pump Station Asset Management Plan

FINAL REPORT

FEBRUARY 2018

WEST YOST ASSOCIATES

REPORT | FEBRUARY 2018

Pump Station
Asset Management Plan

Prepared for

Castro Valley Sanitary District

Project No. 455-20-16-08

REGISTERED PROFESSIONAL ENGINEER
LANI GOOD
No. C073677
Exp. 3-31-19
CIVIL
STATE OF CALIFORNIA

Project Manager: [Lani Good, PE]	2/13/18 Date
QA/QC Review: [Chris Malone, PE]	1/3/18 Date

WEST YOST ASSOCIATES

WEST YOST ASSOCIATES

Table of Contents

Pump Station Asset Management Plan

Executive Summary

1.0 Introduction 1

2.0 Background Information 3

2.1 Available Information Sources 3

2.2 Wastewater Pump Station Descriptions 4

2.3 Levels of Service Definition 4

3.0 Asset Inventory 6

4.0 Condition Assessment 6

5.0 Risk Assessment Methodology 8

5.1 Likelihood of Component Failure 8

5.2 Consequence of Component Failure 9

5.3 Assignment of Component Risk 10

5.4 Likelihood of Pump Station Failure 11

5.5 Consequence of Pump Station Failure 12

5.6 Assignment of Pump Station Risk 14

6.0 Risk Assessment Results 14

6.1 Component Risk Assessment 14

6.2 Pump Station Risk Assessment 15

6.2.1 Likelihood of Failure Results 15

6.2.2 Consequence of Failure Results 17

6.2.3 Pump Station Risk Assessment Results 19

7.0 Recommended Improvements 20

7.1 Cost Estimating Methodology 20

7.2 Rehabilitation/Replacement 20

7.3 Safety and Reliability Upgrades 21

7.3.1 Access Hatches 22

7.3.2 Fall Protection Anchorage 22

7.4 Project Implementation 22

Table of Contents

List of Tables

Table 1. Proposed Levels of Service 4
Table 2. Condition and Performance Ranking Index 6
Table 3. Asset Classification, Unit Costs, and Baseline Criteria for Pump Station Components 7
Table 4. Likelihood of Component Failure Criteria Scoring 9
Table 5. Consequence of Component Failure Criteria Scoring 10
Table 6. Pump Station Component Risk Levels 11
Table 7. Likelihood of Station Failure Rating Factors 12
Table 8. Consequence of Station Failure Rating Factors 13
Table 9. Total Number of Pump Station Components by Risk Level 14
Table 10. Summary of Component Risk Assessment Results 15
Table 11. Likelihood of Failure Scores by Pump Station 17
Table 12. Estimated Pump Stations Flows 17
Table 13. Calculated Pump Station Storage Volumes 18
Table 14. Pump Station Consequence of Failure Scores 19
Table 15. Summary of Facility Risk Assessment Results 19
Table 16. Pump Station Rehabilitation and Improvement Projects 21

List of Figures

Figure 1. Pump Station Facilities 5
Figure 2. Component Risk Levels and Aggregate Risk Percentages by Pump Station 16

List of Appendices

Appendix A: Asset Registry for Lucity™ Update
Appendix B: Condition Assessment Report
Appendix C: Storage Volume Calculations
Appendix D: Rehabilitation and Improvement Projects

List of Acronyms and Abbreviations

AMP	Asset Management Plan
ADWF	Average dry weather flow
CMMS	Computerized Maintenance Management System
CVSan	Castro Valley Sanitary District
O&M	Operations and Maintenance
PS	Pump Station
PWWF	Peak wet weather flow
SSO	Sanitary sewer overflow

Executive Summary

This Pump Station Asset Management Plan (AMP) has been developed for Castro Valley Sanitary District (CVSan) with the goal of establishing a rehabilitation and replacement program in accordance with desired levels of service.

CVSan currently operates eight wastewater pump stations including four smaller, neighborhood pump stations and four larger-capacity pump stations. The AMP development process included a workshop with CVSan staff, site inspections, and a condition assessment of the eight pump stations to determine the functionality of the facilities and estimate the remaining life of individual station components. A risk assessment was then performed to prioritize pump station improvements. Cost estimates and implementation recommendations are provided for identified improvements.

Asset Inventory and Condition Assessment

An asset registry and classification system for all pump station components was developed using information from CVSan's existing pump station registry and insepction site visits. Individual pump station components were assessed for various factors (unit costs, component life expectancy, difficulty of replacement, and dependency of pump station functionality), which were used as the basis for a station risk assessment.

Risk Assessment

At both the individual component level and at the pump station level, all assets were assessed in terms of likelihood of failure and consequence of failure. The likelihood of failure represents an assessment of the probability that asset failure may occur at any given time, while the consequence of failure represents an assessment of the economic, social, and environmental impact caused by asset failure. Both measures need to be considered to properly evaluate the need for equipment repair or replacement.

Each individual asset component was assigned a likelihood and consequence of failure score based on chosen failure mode metrics and associated rating criteria. Total likelihood and consequence of failure scores were used to assign a single risk level for each individual component, on a scale from Low to High.

For pump stations, likelihood of failure assessed failure modes including Physical Mortality Failure, Power Failure, and Maintenance Failure. Results from the individual component risk assessment were used within the Physical Mortality Failure mode criteria as aggregate risk percentage of components. Consequence of failure modes included Potential Spill Volume, Environmental and Public Health Impact, and Emergency Response Impact. The resulting pump station likelihood and consequence of failure scores were used to obtain a single risk score. From this risk score, an overall risk level was determined, on the same Low to High scale. Table ES.1 provides the overall risk assessment results for each pump station.

Table ES.1. Summary of Facility Risk Assessment Results

Pump Station No.	Consequence of Failure	Likelihood of Failure	Risk Score	Normalized Risk Score	Risk Level
PS01	11	11	121	100	High
PS07	10	10	100	83	High
PS04	12	6	72	60	Medium-High
PS03	11	6	66	55	Medium
PS09	8	8	64	53	Medium
PS08	8	7	56	46	Medium
PS05	6	7	42	35	Medium-Low
PS11	6	3	18	15	Low

Recommended Improvements

Both condition and age-related improvements for each pump station were identified through the field inspection process and in consultation with CVSan maintenance staff. Additional improvements were identified to increase pump station safety and reliability. The costs for proposed improvement projects are shown in Table ES.2.

Table ES.2. Pump Station Rehabilitation and Improvement Projects, Total Costs

Pump Station No.	Project Cost, dollars
PS01	$28,100 or TBD
PS03	$124,600
PS04	$124,600
PS05	$13,400
PS07	$287,100
PS08	$81,400
PS09	$63,700
PS11	$22,500
Safety Upgrades (All)	$30,100
Program Total	**$775,500**

The projects are prioritized for implementation based on the station's risk level. Improvements at the pump stations with the highest risk, Pump Stations No. 1 and 7, should be completed first to reduce the risk of overflow at those stations. Once the concerns at the highest risk stations have been addressed, projects may be completed in the most efficient manner for CVSan.

1.0 INTRODUCTION

This AMP was developed with the goal of establishing a rehabilitation and replacement program in accordance with desired levels of service.

This AMP development process included a workshop with CVSan staff in November 2016, site inspections in April 2017, and a condition assessment of the eight CVSan wastewater pump stations to determine the functionality of the facilities and estimate the remaining life of individual components. A risk analysis was then performed to prioritize pump station improvements. Cost estimates are provided for the identified improvements.

The major topics covered in this report include the following:

- Background Information
- Asset Inventory
- Condition Assessment
- Risk Assessment Methodology
- Risk Assessment Results
- Recommended Improvements

2.0 BACKGROUND INFORMATION

The following background information is presented in this section: 1) Available Information Sources, 2) Wastewater Pump Station Descriptions, and 3) Levels of Service Definition.

2.1 Available Information Sources

The following information was provided by CVSan and was used for this analysis:

1. Pump Station Work Order Records from Lucity CMMS for 9/15/1996 – 12/7/2016, *pumpstationworkorderhistory.xlsx* dated 12/7/2016.
2. Pump Station Asset Registry Records from Lucity CMMS, *pumpdetail.pdf* dated 12/6/2016 and Asset Registry Records from field inventory *PS ID Convention_2015-09-17.xlsx* dated 9/2015.
3. Pump Station Facility Records from Lucity CMMS, *psppmstr.pdf* dated 12/6/2016
4. Monthly Inspection Logs *PumpStation Inspection Log.xlsx* dated 12/2016
5. As-Built Drawings and Improvement Plans.
6. Monthly Inspection Standard Operation Procedure (SOP) *SOP_PS4_edited_2016_10_17.docx* dated 10/17/2016

2.2 Wastewater Pump Station Descriptions

The wastewater collection system includes the eight pump stations shown on Figure 1. Four of the pump stations are small, neighborhood pump stations that serve less than 50 single family homes each. These stations include: Pump Station No. 1 (PS01), Pump Station No. 5 (PS05), Pump Station No. 8 (PS08), and Pump Station No. 11 (PS11). The remaining four pump stations are larger-capacity stations that convey between 20 and 70 gallons per minute during peak wet weather conditions. These larger stations include: Pump Station No. 3 (PS03), Pump Station No. 4 (PS04), Pump Station No. 7 (PS07), and Pump Station No. 9 (PS09). Pump Stations No. 2, 6, and 10 are no longer in service.

2.3 Levels of Service Definition

The CVSan Strategic Plan was reviewed to develop the levels of service, as shown in Table 1. The levels of service allow CVSan to focus its efforts and resources, to communicate service expectations and choices, to develop defensible risk-based policies for avoiding sanitary sewer overflows (SSOs), and to provide the CVSan Board of Directors with appropriate cost information for use in establishing rates.

Table 1. Proposed Levels of Service

Serve Customers/ Reduce Complaint Calls	Increase System Reliability	Comply with Regulations[a]
• Avoid blockages, backups, and overflows • Control costs • Maintain cost-effective and efficient work practices • Respond quickly and appropriately to calls	• Proactively maintain the system • Reduce hot spots and high-frequency preventative maintenance areas • Proactively replace infrastructure • Reduce emergency repairs caused by mechanical failure • Provide sufficient emergency facilities, including storage basins and backup generators	• Improve system to reduce the risk of sanitary sewer overflows • Reduce I&I • Provide safe facilities

[a] Relevant regulations include State environmental regulations such as the Sanitary Sewer Management Plan, Waste Discharge Requirements,and Monitoring and Reporting Program, as well as federal regulations including those established by the Occupations Safety and Health Administration (OSHA).

Last Saved: 2/13/2018 1:41:54 PM W:\Clients\455 Castro Valley Sanitary District\20-16-08 CVSan-On Call\GIS\MXD\03-PS Cond Asmt and AMP\Fig01_StationMap.mxd : nshojaei

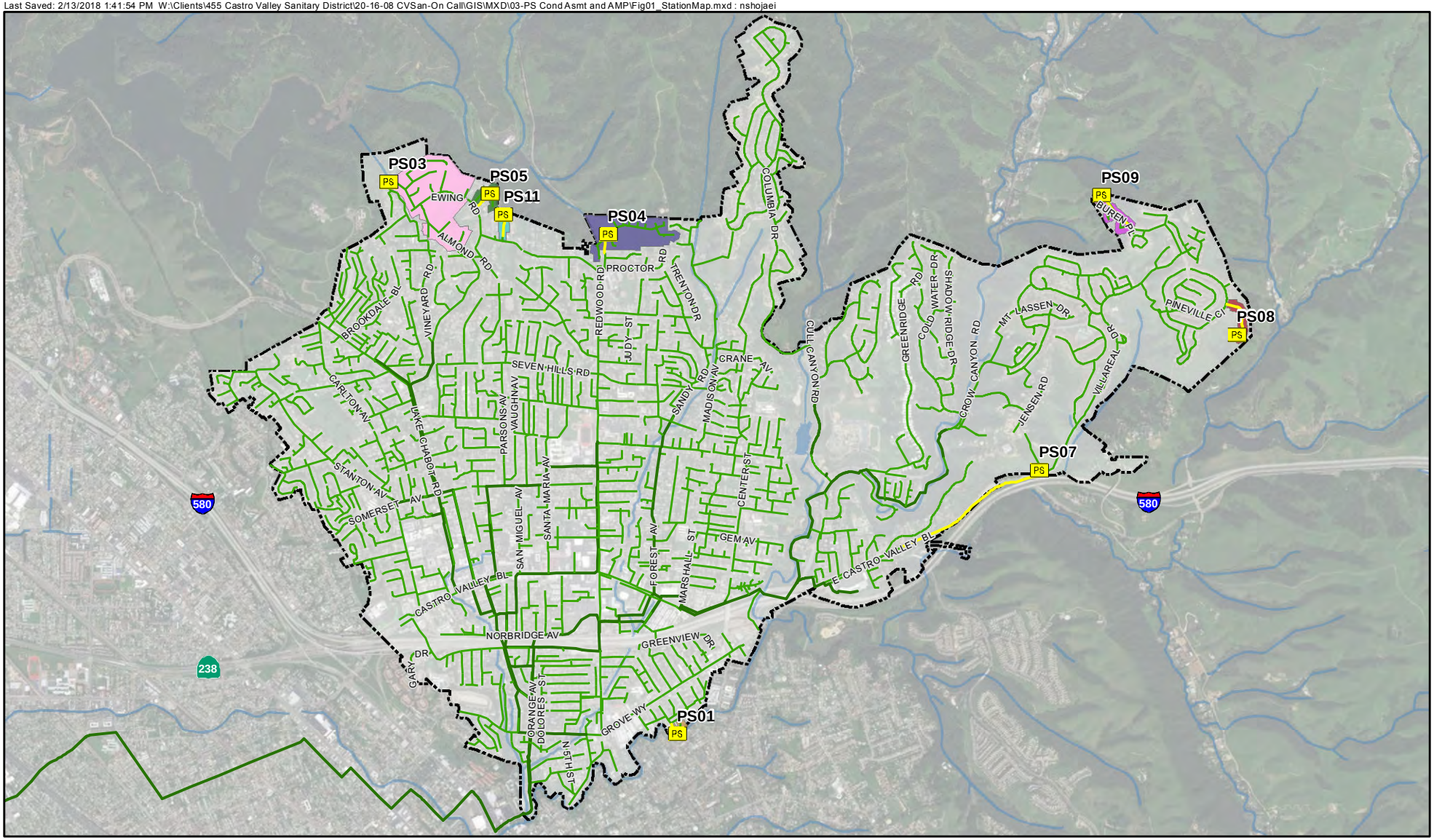

Symbology

- District Boundary
- Pump Station
- Force Main
- Gravity Sewer Trunk (≥ 12-inches)
- Gravity Sewer Collector (≤ 10-inches)

Pump Station Service Area

- Pump Station 1
- Pump Station 3
- Pump Station 4
- Pump Station 5
- Pump Station 8
- Pump Station 9
- Pump Station 11

Note:
1. Due to flow-splits, PS07 service area is undelineated.

N

0 1,800 3,600

Scale in Feet

CVSan

WEST YOST ASSOCIATES

Figure 1

Pump Station Facilities

Castro Valley Sanitary District
Pump Station Asset Management Plan

3.0 ASSET INVENTORY

CVSan currently has a partially developed pump station asset registry in the Lucity™ computerized maintenance management system (CMMS). Lucity stores asset physical properties (including size, material, manufacturer, and installation date) and maintenance work order history. Additionally, inventories of individual pump station components were documented in 2015 by CVSan pump station maintenance staff.

West Yost reviewed the asset registries and verified the information during the condition assessment site visits. These site visits and the condition assessment process are discussed in detail in Section 4.0. For pump station components not previously documented in the registry, West Yost has produced all the requisite information necessary to create new asset records for use in updating the Lucity registry. This complete asset registry is included in Appendix A of this report, and will be transmitted electronically to CVSan.

West Yost developed an asset classification system that defines asset classes and asset subclasses. Through this classification system, each component is assessed for such factors as standard useful life, unit cost, replacement difficulty, and other factors. These factors, which are used to assess the risk of a component failure, are discussed in detail in Section 4.0 of this report. The asset classification system developed for CVSan's wastewater pump stations is shown in Table 3, along with key information for each asset, including unit costs, component life expectancy, difficulty of replacement, and the dependency of pump station functionality on the given component.

4.0 CONDITION ASSESSMENT

West Yost conducted site inspections of the eight pump stations on April 12th and 13th, 2017. Photographic documentation was collected, and any visible inventory information (e.g., manufacturer, model number, size, etc.) was obtained. During the site inpsections, a condition assessment was conducted by a team including the CVSan Collection System Maintenance Technician, a Civil Engineer from West Yost, and an Electrical Engineer from TJC and Associates. The condition assessment consisted of visual observations and documentation of the existing pump station physical condition and performance. Condition and performance scores were assigned for each asset based on information observed by the condition assessment team and anecdotal information provided by CVSan maintenance staff. The scores were assigned based on the criteria explained in Table 2.

Table 2. Condition and Performance Ranking Index

Condition Score	Condition Ranking Index	Performance Score	Performance Ranking Index
1	Excellent	1	Component functioning as intended
2	Slight visible degradation	2	In service, but higher than expected operation & maintenance (O&M) costs
3	Visible degradation	3	In service, but function is impaired
4	Integrity of component moderately compromised	4	In service, but function is highly impaired
5	Integrity of component severely compromised	5	Component is not functioning as intended

Table 3. Asset Classification, Unit Costs, and Baseline Criteria for Pump Station Components

Asset Class	Component	Reference Units	Unit cost	Industry Standard Life, years	Replacement Difficulty	Station Functionality
Accessway	Asphalt Surface	Area (sq ft)	$2*Area	50	Difficult	Operates Normally Without
	Concrete Surface	Area (sq ft)	$4*Area	50	Difficult	Operates Normally Without
Air Compressor	Air Compressor	Horsepower (HP)	$4,400*(HP/40)$^{0.6}$	20	Easy	Reduced Capacity/Pressure
Coupling	Quick Disconnect Coupling	Diameter (in)	$100*(D/4)$^{2/3}$	20	Easy	Lack of Redundancy/Potential Reduced Efficiency
	Standard Coupling	Diameter (in)	$100*(D/4)$^{2/3}$	20	Easy	Reduced Capacity/Pressure
Electrical	Auto Transfer Switch	Amps (A)	$15*Amps	20	Off-line	Cannot Operate Without
	Autodialer	Each (EA)	$2,000	20	Difficult	Lack of Redundancy/Potential Reduced Efficiency
	Control Panel	Each (EA)	$45,000	20	Off-line	Cannot Operate Without
	Main Switchboard	Amps (A)	$25*Amps + $26,000	20	Off-line	Cannot Operate Without
	Motor Starter	Each (EA)	$2,000	15	Easy	Reduced Efficiency
	Power Panel	Each (EA)	$45,000	20	Off-line	Cannot Operate Without
	Variable Frequency Drive	Each (EA)	$1,500	15	Easy	Reduced Efficiency
Fencing	Chain Link Fence	Length (LF)	$34*Length	40	Difficult	Operates Normally Without
	Ornamental Iron Fence	Length (LF)	$50*Length	40	Difficult	Operates Normally Without
	Wood Fence	Length (LF)	$28*Length	20	Difficult	Operates Normally Without
Generator Equipment	Adaptor for Portable Unit	Each (EA)	$3,000	20	Easy	Lack of Redundancy/Potential Reduced Efficiency
	Generator	Lump Sum (LS)	$50,000	25	Difficult	Lack of Redundancy/Potential Reduced Efficiency
HVAC Systems	Fan	Each (EA)	$1,000	15	Easy	Operates Normally Without
Instrumentation	Level Element - Bubbler	Each (EA)	$1,500	15	Easy	Reduced Efficiency
	Level Element - Float	Each (EA)	$1,000	15	Easy	Reduced Efficiency
	Level Element - Sensor	Each (EA)	$3,350	15	Easy	Reduced Efficiency
Motor	Motor	Horsepower (HP)	$200*HP	30	Easy	Lack of Redundancy/Potential Reduced Efficiency
Piping	Bypass Piping	Diameter (in) & Length (LF)	$20*D*10	50	Difficult	Lack of Redundancy/Potential Reduced Efficiency
	Compressor Piping	Diameter (in) & Length (LF)	$20*D*10	50	Difficult	Operates Normally Without
	Pipe Support	Each (EA)	$500	20	Difficult	Operates Normally Without
	Pipe Tee	Each (EA)	$700	30	Easy	Lack of Redundancy/Potential Reduced Efficiency
	Pump Discharge Piping	Diameter (in)	$10*D*18	50	Difficult	Lack of Redundancy/Potential Reduced Efficiency
	Yard Piping	Diameter (in)	$10*D*36	50	Off-line	Cannot Operate Without
Pump	Submersible Pump	Horsepower (HP)	$650*HP - $1,000	20	Difficult	Lack of Redundancy/Potential Reduced Efficiency
	Sump Pump	Each (EA)	$400	10	Easy	Operates Normally Without
	Vertical End Suction Pump	Horsepower (HP)	$500*HP	30	Difficult	Lack of Redundancy/Potential Reduced Efficiency
Security	Security Gate	Each (EA)	$1,000	40	Difficult	Operates Normally Without
Site Structures	Access Hatch	Each (EA)	$2,500	20	Difficult	Operates Normally Without
	Building	Area (sq ft)	$200*Area	50	Difficult	Lack of Redundancy/Potential Reduced Efficiency
	Drain	Lump Sum (LS)	TBD	50	Difficult	Operates Normally Without
	Dry Well	Each (EA)	$10,000	40	Offline	Cannot Operate Without
	Hoists	Each (EA)	$2,000	20	Difficult	Operates Normally Without
	Manhole	Each (EA)	$6,500	50	Offline	Cannot Operate Without
	Retaining Wall	Linear Foot (LF)	$15*LF	50	Difficult	Operates Normally Without
	Vault	Each (EA)	$10,000	40	Offline	Cannot Operate Without
	Wet Well	Each (EA)	$10,000	40	Offline	Cannot Operate Without
Tanks	Storage Tank - Concrete	Volume (gal)	$1.5*V	30	Difficult	Reduced Capacity/Pressure
Valves	Air Release Valve	Diameter (in)	$700*D + 100	30	Easy	Reduced Efficiency
	Check Valve	Diameter (in)	$223*(D)$^{1.125}$	25	Difficult	Cannot Operate Without
	Gate Valve	Diameter (in)	$175*(D) + 50	30	Offline	Cannot Operate Without
	Knife Valve	Diameter (in)	$600*(D) - 900	30	Offline	Cannot Operate Without
	Plug Valve	Diameter (in)	$175*D$^{9/8}$	30	Offline	Cannot Operate Without
Water Service	Water Service	Diameter (in)	$10*D*36	50	Difficult	Operates Normally Without

5.0 RISK ASSESSMENT METHODOLOGY

The information obtained from the on-site condition assessment and asset inventory update was used as the basis for the risk assessment.

In performing the risk assessment, each system component was evaluated individually, and the results of that evaluation are used collectively for the assessment of risk for each pump station. At both the component level and at the pump station level, all assets were assessed in terms of both likelihood of failure and consequence of failure. The likelihood of failure represents an assessment of the probability that asset failure may occur at any given time, while the consequence of failure represents an assessment of the impact that asset failure would have on collection system operations. Both measures need to be considered to properly evaluate the need for and prioritization of asset repair or replacement.

The following topics for the individual component risk assessment are discussed in this section: 1) Likelihood of Component Failure; 2) Consequence of Component Failure; and 3) Assignment of Component Risk. Following the component risk discussion is a discussion of: 1) Likelihood of Pump Station Failure; 2) Consequence of Pump Station Failure; and 3) Assignment of Pump Station Risk.

5.1 Likelihood of Component Failure

At the component level, each asset is assigned a Likelihood of Failure Score by considering the following two metrics, referred to as failure modes:

- **Physical Mortality Failure.** Failure due to breakage or deterioration. Two different criteria are used: observed condition of the asset (referred to as Condition Rating) and age of the asset with respect to its expected useful life (referred to as Useful Life Remaining):
  - *Condition Rating*: Considers that an asset with visible damage or degradation is more likely to fail, regardless of age. While condition and age are often dependent, newer components may be in poor condition due to environmental conditions or inadequate maintenance.
  - *Useful Life Remaining*: Considers that older assets are more likely to fail than newer ones, due to the age of materials and wear from repeated use. Is determined by comparing the number of remaining years estimated during the field assessments to the industry standard lifetime for each asset. Useful life remaining is expressed as a percentage of the total expected life.
- **Level of Service Failure**. Failure to perform at the level necessary for adequate system operations to continue. A single functionality criterion (referred to as Performance Rating) is assigned to each component:
  - *Performance Rating***:** Considers that impaired function of assets can cause higher O&M costs or reduced ability of the facility to meet system demands.

The scoring methodology used for each criterion is shown in Table 4. The Condition Rating and Performance Rating were assigned for each component based on information observed by the

condition assessment team and anecdotal information provided by CVSan maintenance staff. For each pump station component, a single Likelihood of Failure Score is obtained by taking the larger of the two physical mortality scores (Condition Rating and Useful Life Remaining Rating) and adding the single level of service score (Performance Rating). As a result, the minimum (best) score is 2 and the maximum (worst) score is 10.

Table 4. Likelihood of Component Failure Criteria Scoring

Factor	Rating (1 being the lowest, 5 being the highest)					Scoring Logic
	1	2	3	4	5	
Physical Mortality						
Useful Life Remaining	≥ 70%	40% to 70%	10% to 40%	5% to 10%	≤ 5%	Highest of two ratings
Condition Rating	Excellent	Slight Visible Degradation	Visible Degradation	Integrity Moderately Compromised	Integrity Severely Compromised	
Level of Service						
Performance Rating	Functioning as Intended -or- Unknown	In Service, but Higher than Expected O&M Costs	In Service, but Function is Impaired	In Service, but Function is Highly Impaired	Not Functioning as Intended	Single Rating
Total Likelihood of Failure Score						Sum of All Failure Modes

5.2 Consequence of Component Failure

At the component level, each asset is assigned a Consequence of Failure Score by considering the following two metrics:

- **Operating Ability**: A measure of the ability of the pump station to operate without the component in service. This metric is assessed through the assignment of a Pump Station Functionality Rating.
  - *Pump Station Functionality Rating:* Considers the functionality of the pump station if a component fails. Component failure will have a varying degree of impact on the ability of the facility to convey wastewater depending on the role of the component and the configuration of the facility. Component failure may lead to reduced power efficiency, lack of redundancy, or inability to function.
- **Service Reliability**: A measure of the difficulty in replacing the component in question. This metric is assessed through the assignment of a Repair/Replacement Difficulty Rating.
  - *Repair/Replacement Difficulty Rating:* Considers that replacement of a component may require a station shutdown or otherwise require increased staff

time. The rating factor increases as the time and/or resources required to repair or replace a component increase. Difficulty ratings include: an *easy* replacement which would take one person less than two hours to replace, a *difficult* replacement which would take more than one person more than two hours to replace, a replacement that would require the station to be taken *offline* while the action occurred, and a replacement that would require a significant redesign to replace due to the component being *obsolete*.

The scoring methodology used for each criterion is shown in Table 5. For each pump station component, a single Consequence of Failure Score is obtained by summing the Pump Station Functionality Rating and the Repair/Replacement Difficulty Rating. As a result, the minimum (best) score is 2 and the maximum (worst) score is 10.

Table 5. Consequence of Component Failure Criteria Scoring

Factor	Rating (1 being the lowest, 5 being the highest)					Scoring Logic
	1	2	3	4	5	
Operating Ability						
Pump Station Functionality	Operates Normally Without Component	Lack of Redundancy/ Potential Reduced Efficiency	Reduced Efficiency	Reduced Capacity/ Pressure	Cannot Operate Without Component	Single Factor
Service Reliability						
Repair/ Replacement Difficulty	Easy	Difficult	-	Offline	Obsolete	Single Factor
Total Likelihood of Failure Score						Sum of All Factors

5.3 Assignment of Component Risk

Using the methodologies described above, each pump station component is assigned a single risk level of Low, Medium-Low, Medium, Medium-High, or High based on a combination of the Likelihood of Failure Score and the Consequence of Failure Score. This process is determined through an iterative calibration process that relies on engineering judgement and is illustrated in Table 6.

Table 6. Pump Station Component Risk Levels

Component Risk Level		Likelihood of Failure Score				
		2–3	4	5	6–7	8–10
Consequence of Failure Score	2–3	Low	Medium-Low	Medium	Medium	High
	4	Medium-Low	Medium	Medium	Medium-High	High
	5	Medium	Medium	Medium-High	Medium-High	High
	6–7	Medium	Medium-High	Medium-High	High	High
	8–10	Medium-High	High	High	High	High

Risk Level: **Red** = High, **Orange** = Medium-High, **Yellow** = Medium, **Light Green** = Medium-Low, **Dark Green** = Low

5.4 Likelihood of Pump Station Failure

At the pump station level, the following failure modes are considered:

- Physical Mortality Failure: Failure due to breakage or deterioration.
- Power Failure: Failure due to inadequate planning for an extended power outage at the site.
- Maintenance Failure: Failure caused by a blockage or condition such as grease, rags, or other maintenance concern.

In the case of each failure mode, one criterion is used to determine the likelihood of failure through that failure mode.

Physical Mortality Failure: Aggregate Risk Percentage of Components. A measure of likelihood of physical mortality failure that considers that a facility with a greater portion of high risk assets is more likely to fail. The Aggregate Risk Percentage for each pump station is determined by calculating the percentage of components in each of the five Risk Levels (Low, Medium-Low, Medium, Medium-High, High), and then applying the following formula:

$$\begin{aligned} &Aggregate\ Risk\ Percentage \\ &\quad = (Percentage\ of\ High\ Risk\ Components) \\ &\quad + (Percentage\ of\ Medium\ High\ Risk\ Components) \\ &\quad + (Percentage\ of\ Medium\ Risk\ Components/2) \end{aligned}$$

The resultant Aggregate Risk Percentages are then compared, and a quantitative score of 1 to 5 is applied to each pump station based upon Aggregate Risk Percentage relative to the other pump stations.

Power Failure: Backup Power Capabilities. A pump station with a backup power supply is less likely to fail in the event of a power outage. Some stations have an onsite generator, which provides the fastest, most reliable response to prevent a station failure during a power outage. Those sites that do not have onsite generators have manual transfer switches that allow the connection of a portable generator, which needs to be brought in from offsite.

Maintenance Failure: Work Order History. A measure of likelihood of maintenance failure that considers that stations that have past maintenance issues are more likely to have future maintenance issues which may lead to a blockage at the station. Maintenance concerns such as ragging can be difficult to prevent and can cause a failure over a short period of time. Maintenance failures from issues such as grease are easier to prevent, as the problem will build up over time and can be observed by operations staff before it reaches a critical condition.

A score is produced for each of these three factors, as summarized in Table 7. A Likelihood of Pump Station Failure score is obtained by simply summing the results obtained for the three individual factors. As a result, the minimum (best) score is 3 and the maximum (worst) score is 15.

Table 7. Likelihood of Station Failure Rating Factors

Factor	Rating (1 being the lowest, 5 being the highest)					Scoring Logic
	1	2	3	4	5	
Physical Mortality						
Aggregate Risk Percentage of Components	> 13% below	6% to 13% below	Within 6%	6 to 13% above	> 13% above	Single Factor
Power Failure						
Backup Power Capabilities	Generator on Site	-	-	-	Manual Transfer Switch	Single Factor
Maintenance						
Work Order History	No Maintenance Concerns	Other Maintenance Concerns	Recurring Grease	-	Recurring Ragging	Single Factor
Total Likelihood of Failure Score						Sum of All Factors

5.5 Consequence of Pump Station Failure

The consequence of failure at the pump station level is intended to consider the impact that a pump station failure would have on the operation of the wastewater collection system. The following categories were evaluated to determine the Consequence of Failure Rating for each pump station:

- Potential Spill Volume
- Environmental and Public Health Impact
- Emergency Response Impact

Potential Spill Volume. SSOs are prohibited by state and federal environmental laws due to their potential adverse impacts on the environment and public health. The impact of SSOs generally increases with increasing spill volume. For this analysis, potential SSO volume was estimated from the average dry weather flow (ADWF) calculated in the CVSan collection system hydraulic model, if available. If the station was not included in the hydraulic model, the ADWF was estimated by

multiplying the upstream parcel count by a standard per parcel flow factor. The peak wet weather flow (PWWF) was also considered in the analysis.

Environmental and Public Health Impact. Wastewater that contaminates waterways poses a direct impact to the environment and public health. For this risk assessment, a GIS-based analysis was performed to identify pump station locations relative to creeks, channels, and culverts. In addition to spills near waterways, the potential for human exposure increases in higher population density areas. Accordingly, proximity to waterways and potential for public exposure to a spill are both considered.

Emergency Response Impact. Emergency response costs can increase substantially depending on the time and effort required. Pump stations with relatively smaller storage volumes relative to flows are more likely to experience an SSO in the event of a pump station failure. For this analysis, the overflow response time was quantified for each station based on storage volumes that take into account wet well volumes, onsite storage tank volumes (where applicable), and storage within adjacent pipes and manholes. Additionally, when bypass pumping is required, the level of difficulty for response will decrease if quick-connects to the force main are available.

The application of these criteria to the risk analysis is summarized in Table 8. A Consequence of Failure score is obtained by summing the results of the three different categories. As a result, the minimum (best) score is 3 and the maximum (worst) score is 15.

Table 8. Consequence of Station Failure Rating Factors

Factor	Rating (1 being the lowest, 5 being the highest)					Scoring Logic
	1	2	3	4	5	
Potential Spill Volume						
ADWF, gpm	≤ 5	5 – 10	10 – 15	15 – 20	> 20	Single Rating
Environmental and Public Health Impact						
Proximity to Waterways	Not Near Waterway	-	-	Within 200 feet of Waterway	Adjacent to Waterway	Maximum of Two Rating Factors
Proximity to Public	Not within Residential Area	-	Within Residential Area	-	-	
Emergency Response Impact						
Overflow Response Time, hours	> 24	12 – 24	8 – 12	2 – 8	≤ 2 or unknown	Maximum of Two Rating Factors
Bypass Connection	-	Quick-connect bypass	No quick-connects, but fast bypass setup	No bypass capabilities, must haul wastewater	-	
Total Consequence of Failure Score						Sum of All Factors

5.6 Assignment of Pump Station Risk

Having obtained both a Likelihood of Failure score and a Consequence of Failure score for each pump station, the two scores were multiplied together to obtain a single Risk Score. The results were then normalized to a maximum value of 100 by dividing every pump station Risk Score by the highest score obtained. An overall Risk Level was then determined from the normalized Risk Score as follows:

- Low Risk: Normalized Risk Score less than 30.
- Medium-Low Risk: Normalized Risk Score between 30 and 40.
- Medium Risk: Normalized Risk Score between 40 and 60.
- Medium-High Risk: Normalized Risk Score between 60 and 70.
- High Risk: Normalized Risk Score greater than 70.

6.0 RISK ASSESSMENT RESULTS

The following results are presented in this section: 1) Component Risk Assessment; and 2) Pump Station Risk Assessment.

6.1 Component Risk Assessment

The individual risk assessment results for each pump station component are presented in Appendix A. Table 9 shows the total number of components that fall into each Likelihood of Failure and Consequence of Failure score ranges defined in Sections 5.1 and 0.

Table 9. Total Number of Pump Station Components by Risk Level

Total Number of Components		Likelihood of Failure Score					
		2–3	4	5	6–7	8–10	Total Components
Consequence of Failure Score	2–3	61	8	1	22	0	92
	4	44	26	0	20	2	92
	5	2	0	0	8	0	10
	6–7	21	2	0	6	0	29
	8–10	35	12	8	24	3	82
	Total Components	163	48	9	80	5	305

Risk Level: **Red** = High, **Orange** = Medium-High, **Yellow** = Medium, **Light Green** = Medium-Low, **Dark Green** = Low

These component risk assessment results are grouped by Risk Level in Table 10. As discussed in Section 5.4, these results are then used in establishing the likelihood of failure results at the pump station level.

Table 10. Summary of Component Risk Assessment Results		
Risk Level	No. of Components	Percent of Total
High	55	18%
Medium-High	65	21%
Medium	72	24%
Medium-Low	52	17%
Low	61	20%
Total	305	100%

6.2 Pump Station Risk Assessment

The following pump station results are considered in this section: 1) Likelihood of Failure Results; 2) Consequence of Failure Results; and 3) Pump Station Risk Assessment Results.

6.2.1 Likelihood of Failure Results

The following criteria are used in the likelihood of pump station failure analysis:

- Aggregate Risk Percentage of Components
- Backup Power Capabilities
- Work Order History

Aggregate Risk Percentage of Components. The Aggregate Risk Percentage of Components, the indicator for likelihood of physical mortality failure, is shown on Figure 2. For each pump station, the percentages of components that fall into the five Risk Levels (Low, Medium-Low, Medium, Medium-High, High) are shown by the colored bars. The calculated Aggregate Risk Percentages (as defined in Section 5.4) are shown by each black dot, and the average aggregate risk percentage for all stations is shown by the black line. As shown on Figure 2, Pump Stations No. 1, 7, 8, and 9 have above average Aggregate Risk Percentages, indicating that the assets are contributing to a higher-level risk for pump station failure. Pump Stations No. 3, 4, 5, and 11 have below average Aggregate Risk Percentages, indicating that the assets are contributing to a lower level risk for pump station failure.

Figure 2. Component Risk Levels and Aggregate Risk Percentages by Pump Station

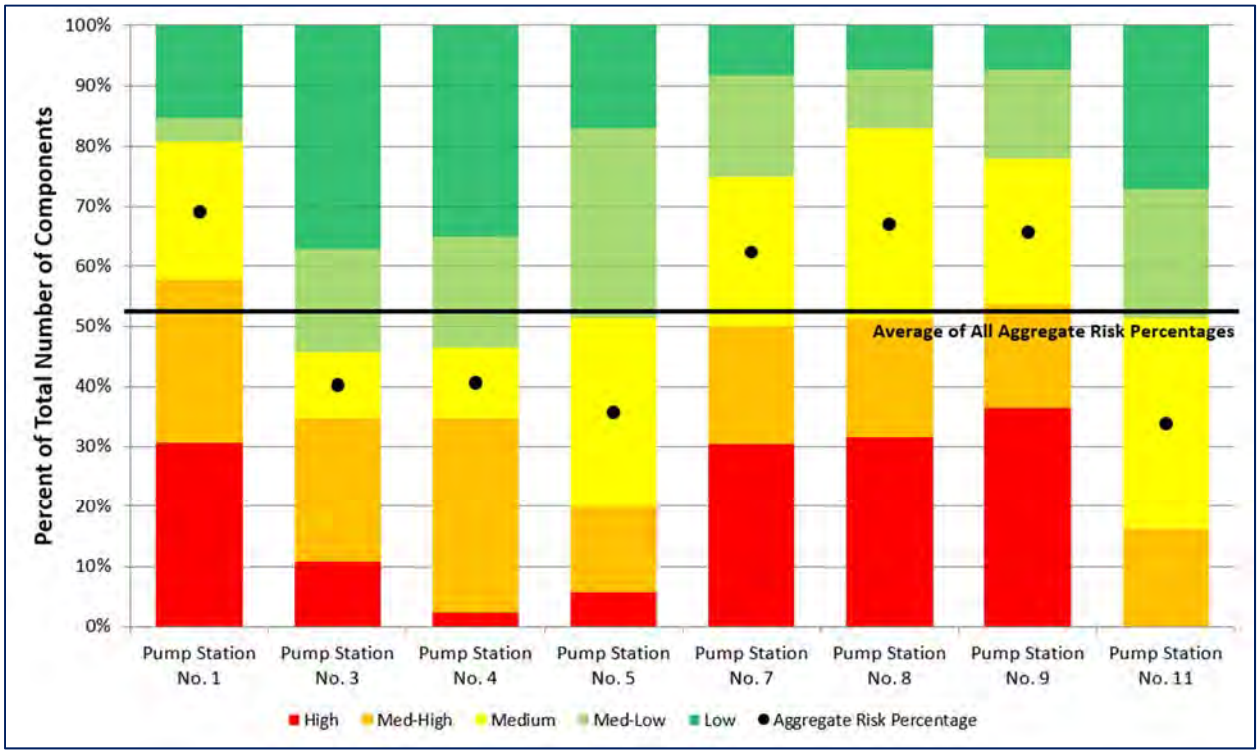

Backup Power Capabilities. During each site visit, the condition assessment team evaluated and recorded the backup power configuration at each site. Pump Stations No. 3, 4, 7, 8, 9, and 11 have standby generators on site. Pump Stations No. 1 and 5 have a manual transfer switch for connection to a portable generator.

Work Order History. CVSan staff provided a list of maintenance concerns regularly observed at each pump station. Pump Station No. 7 has recurring ragging. Pump Stations No. 3 and 4 have recurring grease. Pump Station No. 9 periodically has small plastic balls collecting in the wet well. All other stations have no recurring maintenance concerns.

Applying the results of the criteria for each failure mode (physical mortality, lack of redundancy, and maintenance) produces the pump station Likelihood of Failure Scores shown in Table 11. The total Likelihood of Failure Score is the sum of the three factors.

Table 11. Likelihood of Failure Scores by Pump Station				
Pump Station No.	Aggregate Risk Score	Backup Power Score	Work Order History Score	Total Likelihood of Failure Score
PS01	5	5	1	**11**
PS03	2	1	3	**6**
PS04	2	1	3	**6**
PS05	1	5	1	**7**
PS07	4	1	5	**10**
PS08	5	1	1	**7**
PS09	5	1	2	**8**
PS11	1	1	1	**3**

6.2.2 Consequence of Failure Results

The following categories were evaluated to determine the Consequence of Failure Rating for each pump station:

- Potential Spill Volume
- Environmental and Public Health Impact
- Emergency Response Impact

Potential Spill Volume. For this analysis, potential spill volume is estimated in terms of the amount of flow expected at the station, expressed in terms of ADWF. These results are taken either from the CVSan collection system hydraulic model or from an estimate of upstream parcel counts with standard flow factors applied. The PWWF for the unmodeled lift stations was calculated using the peaking factor from the modeled gravity sewer main closest to the pump station facility. The modeled and estimated flow rates are shown in Table 12.

Table 12. Estimated Pump Stations Flows				
Pump Station No.	Calculation Method[(a)]	Upstream Parcel Count	ADWF, gpm	PWWF, gpm
PS01	Estimated by Parcel Count	14	1.5	2.1
PS03	Hydraulic Model	–	17.4	26.4
PS04	Estimated by Parcel Count	107	11.1	18.7
PS05	Estimated by Parcel Count	25	2.6	2.8
PS07	Hydraulic Model	–	26.3	69.4
PS08	Estimated by Parcel Count	48	5.0	13.6
PS09	Estimated by Parcel Count	87	9.1	25.2
PS11	Estimated by Parcel Count	13	1.4	2.3

[(a)] Assumed single-family residential flow factor is 150 gpd per parcel (Wastewater Collection System Master Plan Update, 2016).

Environmental and Public Health Impact. A GIS proximity analysis was used to determine environmental and public health impacts of a potential spill. Pump Station No. 1 and Pump Station No. 4 are located directly adjacent to creeks, and Pump Station No. 3 is located within 200 feet of a waterway. All other stations are over 400 feet from the nearest waterway; therefore, it is assumed that the SSO would be contained prior to wastewater entering a waterway. In addition, with the exception of Pump Station No. 7, all stations are within residential neighborhoods. Therefore, a spill from these stations would present a potential health risk for nearby residents. Pump Station No. 7 is located along a roadway that is not expected to have high pedestrian traffic. None of the pump stations are located in close proximity (less than 500 feet) to high pedestrian traffic areas such as schools or parks.

Emergency Response Impact. Emergency response time was quantified for each pump station by estimating the combined storage of the pump station wet well, onsite storage tanks (where applicable), and storage within adjacent/upstream pipes and manholes. The calculated storage volumes are shown in Table 13. A detailed presentation of the storage volume calculations is included as Appendix C.

Table 13. Calculated Pump Station Storage Volumes

Pump Station No.	Storage Volume, gal				
	Wet Well	On-Site Tank	Pipe	Manhole	Total
PS01	*unknown*[(a)]	0	646	3,336	unknown
PS03	608	5,000	195	3,329	9,132
PS04	726	0	261	1,601	2,588
PS05	2,802	0	121	1,242	4,165
PS07	2,658	23,000	282	1,900	27,841
PS08	2,367	6,500	198	1,414	10,479
PS09	3,403	0	833	6,396	10,631
PS11	4,289	0	0	0	4,289

[(a)] Station 1 wet well storage volume is unknown, as level set point elevations are not recorded.

Based on the ADWF and PWWF results shown in Table 12 and the storage volumes in Table 13, the overflow response time (i.e., time until an SSO occurs) was calculated for each station. The results of that calculation are shown in Table 14. The storage volume for Pump Station No. 1 is not known. Unknowns in the system are considered to be the highest risk; therefore, this station is assigned the highest score (5) for the Emergency Response factor.

Table 14. Pump Station Consequence of Failure Scores

Pump Station No.	Potential Spill Volume Score	Environment/Public Health Score[a]		Emergency Response Impact Score[a]		Total Consequence of Failure Score
	ADWF	Proximity to Waterway	Proximity to Public	Overflow Response Time	Bypass Connection	
PS01	1	5	3	5	3	**11**
PS03	4	4	3	3	2	**11**
PS04	3	5	3	4	2	**12**
PS05	1	1	3	1	2	**6**
PS07	5	1	1	2	4	**10**
PS08	2	1	3	1	3	**8**
PS09	2	1	3	2	3	**8**
PS11	1	1	3	1	2	**6**

[a] For both Environment/Public Health and Emergency Response, the higher of the two scores is used for the total score.

6.2.3 Pump Station Risk Assessment Results

The overall risk assessment results for each pump station are summarized in Table 15. As discussed in Section 5.6, the overall risk score is obtained by multiplying the Consequence of Failure Score and the Likelihood of Failure Score together. The resulting values are then normalized to a maximum value of 100 by dividing all of the scores by the highest score. As indicated in Table 15, Pump Station No. 1 and Pump Station No. 7 are considered High risk and Pump Station No. 4 is considered Medium-High risk. All other stations are considered Medium or lower risk.

Table 15. Summary of Facility Risk Assessment Results

Pump Station No.	Consequence of Failure	Likelihood of Failure	Risk Score	Normalized Risk Score	Risk Level
PS01	11	11	121	100	High
PS07	10	10	100	83	High
PS04	12	6	72	60	Medium-High
PS03	11	6	66	55	Medium
PS09	8	8	64	53	Medium
PS08	8	7	56	46	Medium
PS05	6	7	42	35	Medium-Low
PS11	6	3	18	15	Low

7.0 RECOMMENDED IMPROVEMENTS

This section describes the resulting recommended rehabilitation and upgrade improvements for each pump station.

7.1 Cost Estimating Methodology

The costs for the proposed improvements were developed on a unit-cost basis using the CVSan's cost records, manufacturers' estimates, RS Means published costs, and West Yost experience from similar projects. The unit costs are presented by asset classification in Table 3. All costs are categorized either as replacement costs or as rehabilitation costs, as shown in Appendix D.

Replacement Costs. Replacement cost estimates include markups of 35 percent for administrative, legal, engineering, and construction management; 50 percent for construction and installation; 30 percent for construction contingency; and 20 percent for overhead and profit.

Rehabilitation Costs. Rehabilitation costs include 35 percent for administrative, legal, engineering, and construction management costs; 50 percent for construction and installation costs; 10 percent for removal of existing materials; and 20 percent for overhead and profit.

7.2 Rehabilitation/Replacement

This assessment identified a list of recommended improvements for each pump station, which include condition and age-related improvements identified through the field inspection process and in consultation with CVSan maintenance staff. A detailed description of the proposed improvements at each pump station is presented in Appendix D. A summary of the project costs by category is shown in Table 16.

Table 16. Pump Station Rehabilitation and Improvement Projects	
Improvement Project	Project Cost, dollars
Pump Station No. 1	
Safety Improvements	11,800
Mechanical Rehabilitation	13,500
Structural Rehabilitation	1,600
Electrical Rehabilitation	1,200
-or-	
Relocate and Replace Station	TBD
Pump Station No. 1 Total	$28,100 or TBD
Pump Station No. 3	
Safety Improvements	2,400
Electrical and Instrumentation Improvements	122,200
Pump Station No. 3 Total	$124,600
Pump Station No. 4	
Safety Improvements	2,400
Electrical and Instrumentation Improvements	122,200
Pump Station No. 4 Total	$124,600
Pump Station No. 5	
Mechanical Rehabilitation	2,800
Electrical and Instrumentation Improvements	10,600
Pump Station No. 5 Total	$13,400
Pump Station No. 7	
Reliability and Safety Upgrades	37,700
Electrical and Instrumentation Improvements	206,900
Mechanical Rehabilitation	36,300
Structural Rehabilitation	6,200
Pump Station No. 7 Total	$287,100
Pump Station No. 8	
Reliability and Safety Upgrades	42,500
Mechanical Rehabilitation	1,800
Structural Rehabilitation	9,700
Electrical and Instrumentation Improvements	27,400
Pump Station No. 8 Total	$81,400
Pump Station No. 9	
Safety Upgrades	18,000
Mechanical Rehabilitation (long term - 5 to 10 years)	10,200
Structural Rehabilitation	14,000
Electrical and Instrumentation Improvements	21,500
Pump Station No. 9 Total	$63,700
Pump Station No. 11	
Safety Upgrades	11,800
Electrical and Instrumentation Improvements	8,500
Mechanical Rehabilitation (long term - 5 to 10 years)	2,200
Pump Station No. 11 Total	$22,500
All Stations	
Safety Upgrades	$30,100
All Stations Total	$30,100
Program Total	**$775,500**

7.3 Safety and Reliability Upgrades

Additional improvements have been identified to increase safety and reliability, such as:

- Adding bypass quick connects (where bypass pumping is possible),
- Adding emergency generators,
- Upgrading access hatches, and
- Adding fall protection anchorage.

7.3.1 Access Hatches

Several sites have wet/dry well and/or valve vault access hatches without proper safety grates and/or spring-assisted hinges (so two people are required to open the hatch). These access hatches are recommended for replacement with upgraded hatches that include fall protection grates and spring-assisted hinges that enable one person to open them safely.

7.3.2 Fall Protection Anchorage

Fall protection anchors with a 5,000-pound capacity are required for maintenance activities that involve working around an open wet well or dry well hatch (such as hydrocleaning the wet well). Ideally, workers' lanyards should be hooked to anchors at or above shoulder height to minimize the potential fall distance into the hole. There are many types of anchorage that can be installed, and the selected anchorage will depend on the configuration of each site. If there is a building nearby, anchor points that meet the required 5,000-pound capacity may be able to be installed. There are also removable, portable anchor posts that attach to plates or cured concrete holes installed at the ground level. For pump stations with I-beam cranes installed over the wet well, there are inexpensive glider sliding beam anchors that can be used to attach to the existing I-beams.

7.4 Project Implementation

The projects should be prioritized based on the station's risk level. Improvements at the pump stations with the highest risk, Pump Stations No. 1 and 7, should be completed first to reduce the risk of overflow at those stations

Pump Station No. 1 is recommended for complete replacement and relocation to the public right-of-way. This station is in need of significant rehabilitation, but since the station is so small, it is more cost effective to completely replace the station with a new packaged pump station. This site also has significant operation and maintenance issues due to its location on deteriorating private property directly adjacent to a creek. Since the station can be cost-effectively replaced with a new packaged pump station, it is recommended that CVSan attempt to relocate the station out of the residential backyard and into the public right-of-way where CVSan can access the site more readily.

Once the concerns at the highest risk stations have been addressed, projects may be completed in the most efficient manner for CVSan. It may be preferential to complete all recommended projects at each station at one time, or it may be more efficient to group improvements based on the type

of upgrades across all stations (i.e., complete electrical and instrumentation improvements at all stations at one time).

APPENDIX A

Asset Registry for Lucity™ Update

Appendix A. Asset Registry for Lucity™ Update

Facility	Category	Asset Class	Asset Subclass	AssetID	Description	Parent Component	Purchase Year	Purchase Source	Manufacturer	Model	Serial No.	Size	Units	Material	HP	Speed	Voltage	Amps	Duty (GPM)	Duty (TDH)	Impeller Dia.	Location	Comments	LOF	COF	Risk Level
PS01	Electrical and Powe	ELEC	Control Panel	1-C-PP-1	Control Panel		1995	est													0			8	9	High
PS01	Electrical and Powe	ELEC	Power Panel	1-C-PB-1	Panelboard		1995	est	Square D	Q08-164000							120/240V	100A			0	MCC		6	9	High
PS01	Electrical and Powe	ELEC	Variable Frequency Drive	1-C-VF-1	VFD - Pump 1	1-W-PU-1	2006	nameplate	Titan	C1-0050-GS2	06101200041	3	hp				240V				0	MCC		4	4	Medium
PS01	Electrical and Powe	ELEC	Variable Frequency Drive	1-C-VF-2	VFD - Pump 2	1-W-PU-2	2006	nameplate	Titan	C1-0050-GS2	06101200048	3	hp				240V				0	MCC		4	4	Medium
PS01	Electrical and Powe	GENR	Adaptor for Portable Unit	1-E-REC-1	Generator Receptacle		1995	est									240V	50A			0		Mtd. On PG&E panel	6	3	Medium
PS01	Instrumentation / C	CONT	Autodialer	1-C-VE-1	Autodialer		1995	est	RACO	Verbatim VSS	V11123										0	MCC		6	4	Med-High
PS01	Instrumentation / C	INST	Level Element - Float	1-W-FL-1	Level Float Switches		1995	est	Flygt												0	Wet Well		6	4	Med-High
PS01	Instrumentation / C	INST	Level Element - Sensor	1-C-DL-1	Level Transmitter and Sensor		1995	est	Milltronics	HydroRanger 200											0	MCC		6	4	Med-High
PS01	Mechanical System	MOTR	Motor	1-W-MO-1-WY	Motor - Pump 1	1-W-PU-1	2016	Operator				3	hp		3	1710	230							3	3	Low
PS01	Mechanical System	MOTR	Motor	1-W-MO-2-WY	Motor - Pump 2	1-W-PU-2	2002	Operator				3	hp		3	1710	230							3	3	Low
PS01	Mechanical System	PUMP	Submersible Pump	1-W-PU-1	Submersible Pump 1 (North)		2016	Work Orders	Flygt	CP3085X-434		3	hp						150	28	200	Wet Well		3	4	Med-Low
PS01	Mechanical System	PUMP	Submersible Pump	1-W-PU-2	Submersible Pump 2 (South)		2002	Work Orders	Flygt	CP3085X-434		3	hp						150	28	200	Wet Well		4	4	Medium
PS01	Mechanical System	VALV	Check Valve	1-B-VA-3	Check Valve - Pump 1	1-W-PU-1	1995	Operator	Matco	3781002575		4	inch								0	Valve Vault		4	7	Med-High
PS01	Mechanical System	VALV	Check Valve	1-B-VA-4-WY	Check Valve - Pump 2	1-W-PU-2	1995	Operator	Matco	3781002575		4	inch								0	Valve Vault		4	7	Med-High
PS01	Mechanical System	VALV	Gate Valve	1-B-VA-1	Gate Valve - Pump 1	1-W-PU-1	1995	Operator	Clow Valve			4	inch								0	Valve Vault		4	9	High
PS01	Mechanical System	VALV	Gate Valve	1-B-VA-2-WY	Gate Valve - Pump 2	1-W-PU-2	1995	Operator	Clow Valve			4	inch								0	Valve Vault		4	9	High
PS01	Mechanical System	VALV	Gate Valve	1-B-VA-5-WY	Gate Valve for Force Main	1-M-PI-1-WY	1995	Operator	Clow Valve			4	inch								0	Valve Vault		4	9	High
PS01	Site / Civil	ACCS	Access - Concrete	1-M-AW-1-WY	Site Paving		1995	est						Concrete							0	Outside Structure	Site paving owned by homeowner.	3	3	Low
PS01	Site / Civil	FENC	Fencing - Chain Link	1-M-EN-1-WY	Site Fencing		1995	est						Chain Link							0	Outside Structure	Fencing owned by homeowner	3	3	Low
PS01	Site / Civil	PIPE	Pump Discharge Piping	1-W-PI-1-WY	Discharge Pipe - Pump 1	1-W-PU-1	1949	Operator				4	inch								0	Wet Well		6	4	Med-High
PS01	Site / Civil	PIPE	Pump Discharge Piping	1-W-PI-2-WY	Discharge Pipe - Pump 2	1-W-PU-2	1949	Operator				4	inch								0	Wet Well		6	4	Med-High
PS01	Site / Civil	PIPE	Yard Piping	1-M-PI-1-WY	Force Main Piping		1949	Operator				4	inch	Steel							0	Valve Vault	Wood blocks are used as a pipe support for forcemain	6	9	High
PS01	Structural / Architec	SITE	Access Hatch	1-M-HA-1-WY	Valve Vault Hatch	1-M-VT-1-WY	1949	Operator				6 x 6	sq ft	Aluminum							0	Valve Vault		6	3	Medium
PS01	Structural / Architec	SITE	Access Hatch	1-W-HA-1-WY	Wet Well Hatch	1-W-GL-1-WY	1949	Operator				4 x 4	sq ft	Steel							0	Wet Well		6	3	Medium
PS01	Structural / Architec	SITE	Vault	1-M-VT-1-WY	Valve Vault		1949	Operator				8 x 7.5	sq ft	Concrete							0	Outside Structure		6	9	High
PS01	Structural / Architec	SITE	Wet Well	1-W-GL-1-WY	Wet Well		1949	Operator				4 x 8	sq ft	Concrete							0	Wet Well		6	9	High
PS03	Electrical and Powe	ELEC	Auto Transfer Switch	3-E-AS-1	Automatic Transfer Switch		2015		CAT	MX150	TSA05807	100	amps				120/240V	100A			0	Inside Structure		2	9	Med-High
PS03	Electrical and Powe	ELEC	Control Panel	3-C-PP-1	Control Panel		2015		Tesco								120/240V	200A			0		NEMA 3R	4	9	High
PS03	Electrical and Powe	ELEC	Main Switchboard	3-C-CB-12	Main Breaker		2015		Eaton	ED 65K		200	amps				240V	200A			0			2	9	Med-High
PS03	Electrical and Powe	ELEC	Motor Starter	3-C-SR-1-WY	Starter - Pump 1	3-W-PU-1	2015		Eaton			10	hp		10		240V	45A			0			2	4	Med-Low
PS03	Electrical and Powe	ELEC	Motor Starter	3-C-SR-2-WY	Starter - Pump 2	3-W-PU-2	2015		Eaton			10	hp		10		240V	45A			0			2	4	Med-Low
PS03	Electrical and Powe	ELEC	Power Panel	3-C-PB-1	Panelboard		2015		Eaton	PRL1a	1C96649G02	18	Ckts				120V				0	MCC		2	9	Med-High
PS03	Electrical and Powe	GENR	Generator	3-E-GE-1	Standby Generator - Natural Gas		2015	est	Generac	3345-0	818583	45	kVA				277/480V	54.9A			0	Inside Structure		4	4	Medium
PS03	Instrumentation / C	CONT	Autodialer	3-C-VE-1	Autodialer		2015		RACO	Verbatim VSS	V17384										0	Inside Structure		2	4	Med-Low
PS03	Instrumentation / C	INST	Level Element - Float	3-W-FL-1	Level Float Switches		2015		Flygt	ENM10											0	Wet Well		4	4	Medium
PS03	Instrumentation / C	INST	Level Element - Sensor	3-C-PPC-1	Level Transmitter and Sensor		2015		Siemens	HydroRanger 200											0	MCC		2	4	Med-Low
PS03	Mechanical System	APTN	Pipe Tee	3-B-PI-1	4-way Tee for Bypass Connection	3-B-VT-1-WY	2014	Operator	Star	FXDG	CH0D1250										0	Valve Vault		2	3	Low
PS03	Mechanical System	COUP	Quick Disconnect Coupling	3-B-QC-1	Quick Snap-joint Coupling for Pigging		2014	Operator	Victaulic	78		6	inch								0	Valve Vault		2	3	Low
PS03	Mechanical System	COUP	Quick Disconnect Coupling	3-B-QC-2	Quick Snap-joint Coupling for Pigging		2014	Operator	Victaulic	78		6	inch								0	Valve Vault		2	3	Low
PS03	Mechanical System	COUP	Quick Disconnect Coupling	3-B-QC-3	Quick Coupling for Bypass	3-B-VT-1-WY	2014	Operator	SCI	125		6	inch								0	Valve Vault	Not Seen in the Field	2	3	Low
PS03	Mechanical System	COUP	Quick Disconnect Coupling	3-B-QC-4-WY	Coupling for Pigging		2014	Operator	Victaulic			6	inch								0	Valve Vault		2	3	Low
PS03	Mechanical System	COUP	Quick Disconnect Coupling	3-B-QC-5-WY	Coupling for Pigging		2014	Operator	Victaulic			6	inch								0	Valve Vault		2	3	Low
PS03	Mechanical System	MOTR	Motor	3-W-MO-1-WY	Motor - Pump 1	3-W-PU-1	2003					10	hp		10	1800	230							3	3	Low
PS03	Mechanical System	MOTR	Motor	3-W-MO-2-WY	Motor - Pump 2	3-W-PU-2	2003					10	hp		10	1800	230							3	3	Low
PS03	Mechanical System	PUMP	Sump Pump	3-W-PU-3-WY	Sump Pump in Dry Well	3-D-GL-1-WY	2012	Work Order				0.5	hp								0	Dry Well		3	2	Low
PS03	Mechanical System	PUMP	Vertical End Suction Pump	3-W-PU-1	Pump 1		2003	Work Order	Smith & Loveless	4B2	02-5383B-1	10	hp						275	65	273	Dry Well		3	4	Med-Low
PS03	Mechanical System	PUMP	Vertical End Suction Pump	3-W-PU-2	Pump 2		2003	Work Order	Smith & Loveless	4B2	03-0749A-1	10	hp						275	65	273	Dry Well		3	4	Med-Low
PS03	Mechanical System	VALV	Check Valve	3-B-VA-4	Check Valve for Bypass	3-B-VT-1-WY	2014	Operator	APCO	106H-1		6	inch								0	Valve Vault		2	4	Med-Low
PS03	Mechanical System	VALV	Check Valve	3-W-VA-1	Check Valve		1959		Mueller	040A26020602		4	inch								0	Dry Well		6	7	High
PS03	Mechanical System	VALV	Check Valve	3-W-VA-2	Check Valve		2017		Mueller	0400-8001 AB1LW	50910-07063	4	inch								0	Dry Well	Not Yet Installed	2	7	Medium
PS03	Mechanical System	VALV	Gate Valve	3-B-VA-1	Gate Valve for Pigging		2014	Operator	AVK	45-15032		6	inch								0	Valve Vault		4	9	High
PS03	Mechanical System	VALV	Gate Valve	3-B-VA-2	Gate Valve for Pigging		2014	Operator	AVK	45-15032		6	inch								0	Valve Vault		2	9	Med-High
PS03	Mechanical System	VALV	Gate Valve	3-W-VA-3	Gate Valve		2003	est	USA	1-010-2024		4	inch								0	Dry Well		3	9	Med-High
PS03	Mechanical System	VALV	Gate Valve	3-W-VA-4	Gate Valve		2003	est	USA	1-010-2024		4	inch								0	Dry Well		3	9	Med-High
PS03	Mechanical System	VALV	Gate Valve	3-W-VA-5	Gate Valve for Isolation - Pump 1	3-W-PU-1	2003	est	Mueller	74242		4	inch								0	Dry Well		3	9	Med-High
PS03	Mechanical System	VALV	Gate Valve	3-W-VA-6	Gate Valve for Isolation - Pump 2	3-W-PU-2	2003	est	Mueller	74242		4	inch								0	Dry Well		3	9	Med-High
PS03	Mechanical System	VALV	Knife Valve	3-B-VA-3	Knife Valve for Bypass	3-B-VT-1-WY	2014	Operator	Kennedy	KS-FW	057DHy	6	inch								0	Valve Vault		2	6	Medium
PS03	Site / Civil	ACCS	Access - Asphalt	3-M-AW-1-WY	Site Paving		2015	Operator				1500	sq ft	Asphalt							0	Outside Structure		2	3	Low
PS03	Site / Civil	FENC	Fencing - Chain Link	3-M-EN-1-WY	Site Fencing		2015	Operator				125	LF	Chain Link							0	Outside Structure		2	3	Low
PS03	Site / Civil	PIPE	Yard Piping	3-M-PI-1-WY	Force Main Piping		1959	est				8	inch								0			6	9	High
PS03	Site / Civil	SECR	Security Gate	3-M-SG-1-WY	Rolling Gate	3-M-EN-1-WY	2015	Operator						Chain Link							0	Outside Structure		2	3	Low
PS03	Site / Civil	TANK	Storage Tank - Concrete	3-S-TK-1-WY	Emergency Storage Tank		2015	Operator				5000	gal								0			2	6	Medium
PS03	Structural / Architec	BLDG	Structure	3-R-EN-1-WY	Structure Enclosing Electrical Cabinet & Generator		1959	Operator				192	sq ft	CMU							0		12 ft x 16 ft. Composite tile roof replaced in 2007.	6	4	Med-High
PS03	Structural / Architec	SITE	Access Hatch	3-B-HA-1-WY	Bypass Vault Hatch	3-B-VT-1-WY	2014	Operator	Nystrom			6 x 3.5	sq ft	Aluminum							0	Outside Structure		2	3	Low
PS03	Structural / Architec	SITE	Access Hatch	3-D-HA-1-WY	Dry Well Hatch	3-D-GL-1-WY	2014	Operator	Nystrom			3 x 3	sq ft	Aluminum							0	Dry Well		2	3	Low
PS03	Structural / Architec	SITE	Access Hatch	3-M-HA-1-WY	Pig Launching Vault Hatch	3-M-VT-1-WY	2014	Operator	Nystrom			5 x 3.5	sq ft	Aluminum							0	Valve Vault		2	3	Low
PS03	Structural / Architec	SITE	Access Hatch	3-S-HA-1-WY	Storage Tank Hatch	3-S-TK-1-WY	2015	Operator						Aluminum							0	Outside Structure	Hatch has safety grate	2	3	Low
PS03	Structural / Architec	SITE	Access Hatch	3-W-HA-1-WY	Wet Well Hatch	3-W-GI-1-WY	2014	Operator	Nystrom			3.5 x 3.5	sq ft	Aluminum							0	Wet Well		2	3	Low
PS03	Structural / Architec	SITE	Dry Well	3-D-GL-1-WY	Dry Well		1959	Operator	Smith & Loveless					Steel							0	Dry Well		6	9	High
PS03	Structural / Architec	SITE	Vault	3-B-VT-1-WY	Bypass Vault		2014	Operator				6 x 3.5	sq ft								0	Outside Structure		2	4	Med-Low
PS03	Structural / Architec	SITE	Vault	3-M-VT-1-WY	Pig Launching Vault		2014	Operator				5 x 3.5	sq ft								0	Outside Structure		2	9	Med-High
PS03	Structural / Architec	SITE	Wet Well	3-W-GL-1-WY	Wet Well		2014	Operator				4	ft	Concrete							0	Wet Well	Top half was built in 2014, bottom half is original construction/installation.	3	9	Med-High
PS04	Electrical and Powe	ELEC	Auto Transfer Switch	4-E-AS-1	Automatic Transfer Switch		2015		CAT	MX150	TSA05807	100	amps				120/240V	100A			0	Inside Structure		2	9	Med-High
PS04	Electrical and Powe	ELEC	Control Panel	4-C-PP-1	Control Panel		2015		Tesco								120/240V	200A			0		NEMA 3R	4	9	High
PS04	Electrical and Powe	ELEC	Main Switchboard	4-C-CB-12	Main Breaker		2015		Eaton	ED 65K		200	amps				240V	200A			0			2	9	Med-High
PS04	Electrical and Powe	ELEC	Motor Starter	4-C-SR-1-WY	Starter - Pump 1	4-W-PU-1	2015		Eaton			10	hp		10		240V	45A			0			2	4	Med-Low
PS04	Electrical and Powe	ELEC	Motor Starter	4-C-SR-2-WY	Starter - Pump 2	4-W-PU-2	2015		Eaton			10	hp		10		240V	45A			0			2	4	Med-Low
PS04	Electrical and Powe	ELEC	Power Panel	4-C-PB-1	Panelboard		2015		Eaton	PRL1a	1C96649G02	18	Ckts				120V				0	MCC		2	9	Med-High
PS04	Electrical and Powe	GENR	Generator	4-E-GE-1	Standby Generator - Natural Gas		2005	est	ONAN	45EM	372432639	56	kVA				240V	135A			0	Inside Structure		4	4	Medium
PS04	Instrumentation / C	CONT	Autodialer	4-C-VE-1	Autodialer		2015		RACO	Verbatim VSS	V17384										0	Inside Structure		2	4	Med-Low
PS04	Instrumentation / C	INST	Level Element - Float	4-W-FL-1	Level Float Switches		2015		Flygt	ENM10											0			4	4	Medium
PS04	Instrumentation / C	INST	Level Element - Sensor	4-C-PPC-1	Level Transmitter and Sensor		2015		Siemens	HydroRanger 200											0	MCC		2	4	Med-Low
PS04	Mechanical System	APTN	Pipe Tee	4-B-PI-1	4-way Tee for Bypass Connection	4-B-VT-1-WY	2014	Operator	Star	FXDG	CHOD1250										0	Valve Vault		2	3	Low
PS04	Mechanical System	COUP	Quick Disconnect Coupling	4-B-QC-1	Quick Snap-joint Coupling for Pigging		2014	Operator	Victaulic	78		6	inch								0	Valve Vault		2	3	Low
PS04	Mechanical System	COUP	Quick Disconnect Coupling	4-B-QC-2	Quick Snap-joint Coupling for Pigging		2014	Operator	Victaulic	78		6	inch								0	Valve Vault		2	3	Low
PS04	Mechanical System	COUP	Quick Disconnect Coupling	4-B-QC-3	Quick Coupling for Bypass	4-B-VT-1-WY	2014	Operator	SCI	125		3	inch								0	Valve Vault		2	3	Low
PS04	Mechanical System	COUP	Quick Disconnect Coupling	4-B-QC-4-WY	Quick Coupling for Pigging		2014	Operator	Victaulic			6	inch								0	Valve Vault		2	3	Low
PS04	Mechanical System	COUP	Quick Disconnect Coupling	4-B-QC-5-WY	Quick Coupling for Pigging		2014	Operator	Victaulic	78		6	inch								0	Valve Vault		2	3	Low
PS04	Mechanical System	MOTR	Motor	4-W-MO-1-WY	Motor - Pump 1	4-W-PU-1	2005	Operator	Smith & Loveless	0100C-1HAN-0016	045628B-1	10	hp		10	1800	230/460	27.6/13.8				Dry Well		3	3	Low
PS04	Mechanical System	MOTR	Motor	4-W-MO-2-WY	Motor - Pump 2	4-W-PU-2	2005	Operator	Smith & Loveless	0100C-1HAN-0016	045628C-1	10	hp		10	1800	230/460	27.6/13.8				Dry Well		3	3	Low
PS04	Mechanical System	PUMP	Vertical End Suction Pump	4-W-PU-1	Pump 1		2005	Work Orders	Smith & Loveless	4B2-050-779 273	050779	10	hp						273	65	0	Dry Well		3	4	Med-Low

Appendix A. Asset Registry for Lucity™ Update

Facility	Category	Asset Class	Asset Subclass	AssetID	Description	Parent Component	Purchase Year	Purchase Source	Manufacturer	Model	Serial No.	Size	Units	Material	HP	Speed	Voltage	Amps	Duty (GPM)	Duty (TDH)	Impeller Dia.	Location	Comments	LOF	COF	Risk Level
PS04	Mechanical System	PUMP	Vertical End Suction Pump	4-W-PU-2	Pump 2		2005	Operator	Smith & Loveless	4B2-050-779 273	050780	10	hp						273	65	0	Dry Well		3	4	Med-Low
PS04	Mechanical System	VALV	Check Valve	4-B-VA-4	Check Valve for Bypass Connection	4-B-VT-1-WY	2014	Operator	APCO	106H-1		6	inch								0	Valve Vault		2	4	Med-Low
PS04	Mechanical System	VALV	Check Valve	4-W-VA-1	Check Valve - Pump 1	4-W-PU-1	2005	est	Mueller	040A26020602		4	inch								0	Dry Well		3	7	Medium
PS04	Mechanical System	VALV	Check Valve	4-W-VA-2	Check Valve - Pump 2	4-W-PU-2	2005	est	Mueller	040A26020602		4	inch								0	Dry Well		3	7	Medium
PS04	Mechanical System	VALV	Gate Valve	4-B-VA-1	Gate Valve for Pig Launching		2014	Operator	AVK	45-15032		6	inch								0	Valve Vault		2	9	Med-High
PS04	Mechanical System	VALV	Gate Valve	4-B-VA-2	Gate Valve for Pig Launching		2014	Operator	AVK	45-15032		6	inch								0	Valve Vault		2	9	Med-High
PS04	Mechanical System	VALV	Gate Valve	4-B-VA-3	Gate Valve for Bypass Connection	4-B-VT-1-WY	2014	Operator	Kennedy	KS-FW	057DH4	6	inch								0	Valve Vault		2	6	Medium
PS04	Mechanical System	VALV	Gate Valve	4-W-VA-3	Gate Valve for Isolation - Pump 1 Discharge	4-W-PU-1	2005	est	Mueller	74242		4	inch								0	Dry Well		3	9	Med-High
PS04	Mechanical System	VALV	Gate Valve	4-W-VA-4	Gate Valve for Isolation - Pump 2 Discharge	4-W-PU-2	2005	est	Mueller	74242		4	inch								0	Dry Well		3	9	Med-High
PS04	Mechanical System	VALV	Gate Valve	4-W-VA-5-WY	Gate Valve for Isolation - Pump 1 Suction	4-W-PU-1	2005	est	Mueller	74242		4	inch								0	Dry Well		3	9	Med-High
PS04	Mechanical System	VALV	Gate Valve	4-W-VA-6-WY	Gate Valve for Isolation - Pump 2 Suction	4-W-PU-2	2005	est	Mueller	74242		4	inch								0	Dry Well		3	9	Med-High
PS04	Site / Civil	ACCS	Access - Concrete	4-M-AW-1-WY	Site Paving		2014	Operator				900	sq ft	Concrete							0	Outside Structure		3	3	Low
PS04	Site / Civil	FENC	Fencing - Ornamental Iron	4-M-EN-1-WY	Site Fencing		2014	Operator				25	LF	Ornamental Iron							0	Outside Structure	Partial fencing at the front of site along sidewalk	3	3	Low
PS04	Site / Civil	PIPE	Yard Piping	4-M-PI-1-WY	Force Main Piping		2005	est				6	inch								0			2	9	Med-High
PS04	Site / Civil	SITE	Retaining Wall	4-M-RW-1-WY	Retaining Wall (Front Side of Site)		2014	Operator				30	LF	CMU							0	Outside Structure		2	3	Low
PS04	Structural / Architec	BLDG	Structure	4-R-EN-1-WY	Structure Enclosing Emergency Generator		1960	est				120	sq ft	CMU							0		Building original to site. Composite tile roof replaced in 2012.	6	4	Med-High
PS04	Structural / Architec	SITE	Access Hatch	4-B-HA-1-WY	Bypass Vault Hatch	4-B-VT-1-WY	2014	Operator				6.5 x 4	sq ft								0	Outside Structure		2	3	Low
PS04	Structural / Architec	SITE	Access Hatch	4-D-HA-1-WY	Dry Well Hatch	4-D-GL-1-WY	2014	Operator				3.5 x 3	sq ft	Aluminum							0	Dry Well		2	3	Low
PS04	Structural / Architec	SITE	Access Hatch	4-M-HA-1-WY	Pig Launching Vault Hatch	4-M-VT-1-WY	2014	Operator				4 x 5	sq ft								0	Valve Vault		2	3	Low
PS04	Structural / Architec	SITE	Access Hatch	4-W-HA-1-WY	Wet Well Hatch	4-W-GL-1-WY	2014	Operator				4 x 3.5	sq ft	Aluminum							0	Wet Well		2	3	Low
PS04	Structural / Architec	SITE	Dry Well	4-D-GL-1-WY	Dry Well		2005	est	Smith & Loveless					Steel							0	Dry Well	Original Installation	3	9	Med-High
PS04	Structural / Architec	SITE	Vault	4-B-VT-1-WY	Bypass Vault		2014	Operator													0	Outside Structure		2	4	Med-Low
PS04	Structural / Architec	SITE	Vault	4-M-VT-1-WY	Pig Launching Vault		2014	Operator													0	Outside Structure		2	9	Med-High
PS04	Structural / Architec	SITE	Wet Well	4-W-GL-1-WY	Wet Well		2014	Operator				4	ft	Concrete							0	Wet Well	Top half installed in 2014, bottom half original installation & unknown material.	2	9	Med-High
PS05	Electrical and Powe	ELEC	Control Panel	5-C-PP-1	Control Panel		2013										240V				0			2	9	Med-High
PS05	Electrical and Powe	ELEC	Main Switchboard	5-C-CB-5	Main Breaker		2013		Eaton	J250E		250	amps				240V	250A			0			2	9	Med-High
PS05	Electrical and Powe	ELEC	Power Panel	5-C-PB-1	Panelboard		2013		Siemens	G1224L1125							120/240V				0	MCC		2	9	Med-High
PS05	Electrical and Powe	ELEC	Variable Frequency Drive	5-C-VF-1	VFD - Pump 1	5-W-PU-1	2013			ABB		10	hp		10		240V				0		1 to 3-phase convertor	2	4	Med-Low
PS05	Electrical and Powe	ELEC	Variable Frequency Drive	5-C-VF-2	VFD - Pump 2	5-W-PU-2	2013			ABB		10	hp		10		240V				0		1 to 3-phase convertor	2	4	Med-Low
PS05	Electrical and Powe	GENR	Adaptor for Portable Unit	5-E-REC-1	Generator Receptacle		2013	Operator									240V	250A			0			4	3	Med-Low
PS05	Instrumentation / Co	CONT	Autodialer	5-C-VE-1	Autodialer		2013		RACO	Verbatim VSS	V19849										0	MCC		2	4	Med-Low
PS05	Instrumentation / Co	INST	Level Element - Float	5-W-FL-1	Level Float Switches		2013														0			4	4	Medium
PS05	Instrumentation / Co	INST	Level Element - Sensor	5-C-LE-1	Level Transmitter and Sensor		2013		Siemens	HydroRanger 200											0			2	4	Med-Low
PS05	Mechanical System	COUP	Coupling	5-B-QC-1	Coupling - Pump 1	5-W-PU-1	2013	Operator				4	inch								0	Valve Vault		2	5	Medium
PS05	Mechanical System	COUP	Coupling	5-B-QC-2	Coupling - Pump 2	5-W-PU-2	2013	Operator				4	inch								0	Valve Vault		2	5	Medium
PS05	Mechanical System	HVAC	Fan	5-C-FN-1	Fan		2013	Operator	P.Fannenberg	Pr66000											0	MCC		2	2	Low
PS05	Mechanical System	MOTR	Motor	5-W-MO-1-WY	Motor - Pump 1	5-W-PU-1	2013	Operator		3127.090-1178	3127.090-0680243	10	hp		10	1735	460/230	13/25						3	3	Low
PS05	Mechanical System	MOTR	Motor	5-W-MO-2-WY	Motor - Pump 2	5-W-PU-2	2013	Operator		3127.090-9096	3127.090-0570141	10	hp		10	1735	460/230	13/25						3	3	Low
PS05	Mechanical System	PUMP	Submersible Pump	5-W-PU-1	Submersible Pump 1		2013	Operator	Flygt	CP3127X-462-090-8471008	680243	10	hp						75	72	75	Wet Well		3	4	Med-Low
PS05	Mechanical System	PUMP	Submersible Pump	5-W-PU-2	Submersible Pump 2		2013	Operator	Flygt	CP3127X-462-090-8471008	570141	10	hp						75	72	75	Wet Well		3	4	Med-Low
PS05	Mechanical System	VALV	Air Release Valve	5-B-VA-1	ARV		2013	Operator	Val-Matic	49ASY		2	inch								0	Inside Box		2	4	Med-Low
PS05	Mechanical System	VALV	Check Valve	5-B-VA-2	Check Valve for Pump 2	5-W-PU-2	2013	Operator	Val-Matic	504 A		4	inch								0	Valve Vault		2	7	Medium
PS05	Mechanical System	VALV	Check Valve	5-B-VA-3	Check Valve for Pump 1	5-W-PU-1	2013	Operator	Val-Matic	504 A		4	inch								0	Valve Vault		2	7	Medium
PS05	Mechanical System	VALV	Check Valve	5-B-VA-4	Check Valve for Bypass	5-B-VT-1-WY	2013	Operator	Val-Matic	504 A		4	inch								0	Valve Vault		3	4	Med-Low
PS05	Mechanical System	VALV	Plug Valve	5-B-VA-5	Plug Valve for Force Main Drain	5-M-PI-1-WY	2013	Operator	Val-Matic	CAM-CENTRIC 580 RNXP		4	inch								0	Valve Vault		3	9	Med-High
PS05	Mechanical System	VALV	Plug Valve	5-B-VA-6	Plug Valve for Bypass	5-B-VT-1-WY	2013	Operator	Val-Matic	CAM-CENTRIC 580 RNXP		4	inch								0	Valve Vault		3	6	Medium
PS05	Site / Civil	ACCS	Access - Concrete	5-M-AW-1-WY	Site Paving		1960	Operator				400	sq ft	Concrete							0	Outside Structure		6	3	Medium
PS05	Site / Civil	FENC	Fencing - Wood	5-M-EN-1-WY	Site Fencing		1960	Operator				30	LF	Wood							0	Outside Structure		6	3	Medium
PS05	Site / Civil	PIPE	Bypass Piping	5-B-PI-1-WY	Bypass Piping	5-B-VT-1-WY	2013	Operator				4	inch								0	Valve Vault		3	4	Med-Low
PS05	Site / Civil	PIPE	Pump Discharge Piping	5-W-PI-1-WY	Discharge Piping - Pump 1	5-W-PU-1	2013	Operator				4	inch								0	Wet Well		4	4	Medium
PS05	Site / Civil	PIPE	Pump Discharge Piping	5-W-PI-2-WY	Discharge Piping - Pump 2	5-W-PU-2	2013	Operator				4	inch								0	Wet Well		4	4	Medium
PS05	Site / Civil	PIPE	Yard Piping	5-M-PI-1-WY	Force Main Piping		1960	Operator				4	inch								0			6	9	High
PS05	Site / Civil	SITE	Retaining Wall	5-M-RW-1-WY	Retainig Wall (North and East of the Site)		1960	Operator				40	LF	CMU							0	Outside Structure		6	3	Medium
PS05	Structural / Architec	SITE	Access Hatch	5-B-HA-1-WY	Bypass Vault Hatch	5-B-VT-1-WY	2013	Operator				5 x 4	sq ft	Aluminum							0	Outside Structure		2	3	Low
PS05	Structural / Architec	SITE	Access Hatch	5-M-HA-1-WY	Valve Vault Hatch	5-M-VT-1-WY	2013	Operator				7 x 4	sq ft	Aluminum							0	Valve Vault		2	3	Low
PS05	Structural / Architec	SITE	Access Hatch	5-W-HA-1-WY	Wet Well Hatch	5-W-GL-1-WY	2013	Operator				4 x 2.5	sq ft	Aluminum							0	Wet Well		2	3	Low
PS05	Structural / Architec	SITE	Vault	5-B-VT-1-WY	Bypass Vault		2013	Operator				5 x 4	sq ft	Concrete							0	Outside Structure		2	4	Med-Low
PS05	Structural / Architec	SITE	Vault	5-M-VT-1-WY	Valve Vault		2013	Operator				7 x 4	sq ft	Concrete							0	Valve Vault		2	9	Med-High
PS05	Structural / Architec	SITE	Wet Well	5-W-GL-1-WY	Wet Well		1960	Operator						Concrete							0	Wet Well		6	9	High
PS07	Electrical and Powe	ELEC	Auto Transfer Switch	7-E-AS-1	Automatic Transfer Switch		1989	est	ASCO	962	980895	100	amps				240V	100A			0	MCC		7	9	High
PS07	Electrical and Powe	ELEC	Control Panel	7-C-PP-1	Control Panel		1990	est													0			8	9	High
PS07	Electrical and Powe	ELEC	Motor Starter	7-C-SR-1-WY	Starter - Pump 1	7-W-PU-1	1989	est				10	hp		10						0			6	4	Med-High
PS07	Electrical and Powe	ELEC	Motor Starter	7-C-SR-2-WY	Starter - Pump 2	7-W-PU-2	1989	est				10	hp		10						0			6	4	Med-High
PS07	Electrical and Powe	ELEC	Power Panel	7-C-PB-1	Distribution Panel		1990	est	GSC Inc	1763-1A1							120/240V	150A			0	Inside Structure		6	9	High
PS07	Electrical and Powe	ELEC	Power Panel	7-C-PB-2	Panelboard		1990	est	GSC Inc	1763-1-1A2		18	Ckts				120/240V	100A			0	MCC		6	9	High
PS07	Electrical and Powe	GENR	Generator	7-E-GE-1	Standby Generator - Natural Gas		1989	est	Generac	89A01540-S	887906	37.5	kVA				240V	90.2A			0	Inside Structure		8	4	High
PS07	Instrumentation / Co	CONT	Autodialer	7-C-VE-1	Autodialer		1989	est	RACO	Verbatim VSS	V19849										0	Inside Structure		6	4	Med-High
PS07	Instrumentation / Co	INST	Level Element - Bubbler	7-C-LE-1	Bubbler Level System		1989		Rosemount	D2A12B051B1	3252										0			8	4	High
PS07	Mechanical System	COMP	Air Compressor/Receiver	7-B-CP-1	Bubbler System Compressor		1989	est	Rosemount	D2A12B051B1	3252										0	MCC		6	5	Med-High
PS07	Mechanical System	COMP	Air Compressor/Receiver	7-B-CP-2	Purge Compressor		1989	est	Speedaire	2Z928A											0	MCC		6	5	Med-High
PS07	Mechanical System	COMP	Air Compressor/Receiver	7-B-CP-3	Purge Compressor		1989	est	Speedaire	2Z928A											0	MCC		6	5	Med-High
PS07	Mechanical System	MOTR	Motor	7-W-MO-1-WY	Motor - Pump 1	7-W-PU-1	2010	Operator	Flygt	3127.095-005	3127095-1070015	10	hp		10	1735	460/230	13/25						3	3	Low
PS07	Mechanical System	MOTR	Motor	7-W-MO-2-WY	Motor - Pump 2	7-W-PU-2	2010	Operator	Flygt	3127.095-005	3127095-1150009	10	hp		10	1735	460/230	13/25						3	3	Low
PS07	Mechanical System	PUMP	Submersible Pump	7-W-PU-1	Submersible Pump 1		2010	Operator	Flygt	CP3127-483	3127095-1070015	10	hp						300	57	300	Wet Well		3	4	Med-Low
PS07	Mechanical System	PUMP	Submersible Pump	7-W-PU-2	Submersible Pump 2		2010	Operator	Flygt	CP3127-483	3127095-1150009	10	hp						300	57	300	Wet Well		3	4	Med-Low
PS07	Mechanical System	VALV	Air Release Valve	7-B-VA-4	Combination Valve for Force Main		2012	Operator	APCO	Valve & Primer	443	1	inch								0	Manhole		4	4	Medium
PS07	Mechanical System	VALV	Check Valve	7-B-VA-1	Check Valve in Valve Vault - Pump 1	7-W-PU-1	2004	Operator	Val-Matic	504 A		4	inch								0	Valve Vault		3	7	Medium
PS07	Mechanical System	VALV	Check Valve	7-B-VA-2	Check Valve in Valve Vault - Pump 2	7-W-PU-2	2004	Operator	Val-Matic	504 A Swing- Flop		4	inch								0	Valve Vault		3	7	Medium
PS07	Mechanical System	VALV	Gate Valve	7-B-VA-6-WY	Force Main Isolation Valve	7-M-PI-1-WY	1989	Operator				8	inch								0	Valve Vault		5	9	High
PS07	Mechanical System	VALV	Knife Valve	7-B-VA-3	Knife Gate Valve for Isolation - Pump 1	7-W-PU-1	2004	Operator	AC Valve	77-4		4	inch								0	Valve Vault		5	9	High
PS07	Mechanical System	VALV	Knife Valve	7-B-VA-5-WY	Knife Gate Valve for Isolation - Pump 2	7-W-PU-2	2004	Operator	AC Valve	77-4		4	inch								0	Valve Vault		5	9	High
PS07	Site / Civil	ACCS	Access - Asphalt	7-M-AW-1-WY	Site Paving		1989	Operator				2100	sq ft	Asphalt							0	Outside Structure		3	3	Low
PS07	Site / Civil	FENC	Fencing - Chain Link	7-M-EN-1-WY	Site Fencing		1989	est				350	LF	Chain Link							0	Outside Structure		4	3	Med-Low
PS07	Site / Civil	PIPE	Pipe Support	7-B-PS-1	Pipe Supports	7-M-VT-1-WY	2004	Operator						Stainless Steel							0	Valve Vault		4	3	Med-Low
PS07	Site / Civil	PIPE	Pump Discharge Piping	7-W-PI-1-WY	Discharge Piping in Wet Well - Pump 1	7-W-PU-1	1989	Operator				4	inch	DIP							0	Wet Well		4	4	Medium
PS07	Site / Civil	PIPE	Pump Discharge Piping	7-W-PI-2-WY	Discharge Piping in Wet Well - Pump 2	7-W-PU-2	1989	Operator				4	inch	DIP							0	Wet Well		4	4	Medium
PS07	Site / Civil	PIPE	Yard Piping	7-M-PI-1-WY	Force Main Piping		1989	est				8	inch								0			3	9	Med-High
PS07	Site / Civil	SECR	Security Gate	7-M-SG-1-WY	Swing Gate	7-M-EN-1-WY	1989	Operator						Chain Link							0	Outside Structure		4	3	Med-Low
PS07	Site / Civil	SITE	Hoists	7-M-MR-1-WY	Monorail to Lift Pumps		1989	est													0	Outside Structure		6	3	Medium

Appendix A. Asset Registry for Lucity™ Update

Facility	Category	Asset Class	Asset Subclass	AssetID	Description	Parent Component	Purchase Year	Purchase Source	Manufacturer	Model	Serial No.	Size	Units	Material	HP	Speed	Voltage	Amps	Duty (GPM)	Duty (TDH)	Impeller Dia.	Location	Comments	LOF	COF	Risk Level
PS07	Site / Civil	TANK	Storage Tank - Concrete	7-S-TK-1-WY	Emergency Storage Tank		2004	Operator				23000	gal	Concrete							0	Outside Structure		3	6	Medium
PS07	Structural / Architec	BLDG	Structure	7-R-EN-1-WY	Structure Enclosing Electrical Cabinet & Generator		1989	Operator				660	sq ft	CMU							0		Roof material is shake.	3	4	Med-Low
PS07	Structural / Architec	SITE	Access Hatch	7-M-HA-1-WY	Valve Vault Hatch	7-M-VT-1-WY	1989	Operator				4 x 6	sq ft	Aluminum							0	Valve Vault		6	3	Medium
PS07	Structural / Architec	SITE	Access Hatch	7-W-HA-1-WY	Wet Well Hatch	7-W-GL-1-WY	1989	Operator				48 x 30	sq inch	Aluminum							0	Wet Well		6	3	Medium
PS07	Structural / Architec	SITE	Vault	7-M-VT-1-WY	Valve Vault		1989	Operator				4 x 6	sq ft	Concrete							0	Outside Structure		4	9	High
PS07	Structural / Architec	SITE	Wet Well	7-W-GL-1-WY	Wet Well		2004	Operator				6	ft								0	Wet Well	Originally installed in 1989, but major rehab in 2004	4	9	High
PS08	Electrical and Powe	ELEC	Auto Transfer Switch	8-E-AS-1	Automatic Transfer Switch		1980	est	Spectrum Detroit Diesel	K81004		100	amps					100A			0	MCC		6	9	High
PS08	Electrical and Powe	ELEC	Control Panel	8-C-EN-1	Control Panel		1980	est	Klockner-Moeller	GK SD80							120/240V				0	Inside Structure		6	9	High
PS08	Electrical and Powe	ELEC	Motor Starter	8-C-SR-1-WY	Starter - Pump 1	8-W-PU-1	1990	nameplate				20	hp		20						0			6	4	Med-High
PS08	Electrical and Powe	ELEC	Motor Starter	8-C-SR-2-WY	Starter - Pump 2	8-W-PU-2	1990	nameplate				20	hp		20						0			6	4	Med-High
PS08	Electrical and Powe	ELEC	Power Panel	8-C-PB-1	Panelboard		1980	est	GE	A-Series	AF315	30	Ckts				120/240V	125A			0	Inside Structure		6	9	High
PS08	Electrical and Powe	ELEC	Power Panel	8-C-PB-2	Distribution Panel		1990	nameplate	GE	Spectra Series	510-97099-T						120/240V	250A			0	Inside Structure		6	9	High
PS08	Electrical and Powe	GENR	Generator	8-E-GE-1	Standby Generator - Natural Gas		1998	nameplate	Spectrum Detroit Diesel	100GS60	600067	125	kVA								0	Inside Structure		4	4	Medium
PS08	Instrumentation / Co	CONT	Autodialer	8-C-VE-1	Autodialer		1980	Operator	RACO	Verbatim VSS	V09313										0	Inside Structure		6	4	Med-High
PS08	Instrumentation / Co	INST	Level Element - Bubbler	8-C-LE-1	Bubbler Level System		1980	est	GAST												0			6	4	Med-High
PS08	Mechanical System	COMP	Air Compressor/Receiver	8-C-CP-1	Air Compressor		1980	Operator	Gast	27866											0	MCC	Not at site	6	5	Med-High
PS08	Mechanical System	COUP	Coupling	8-B-QC-1	Coupling		1980	Operator				4	inch								0	Valve Vault		6	5	Med-High
PS08	Mechanical System	COUP	Quick Disconnect Coupling	8-B-QC-2	Coupling		1980	Operator				4	inch								0	Valve Vault		6	3	Medium
PS08	Mechanical System	MOTR	Motor	8-W-MO-1-WY	Motor - Pump 1	8-W-PU-1	2009	Operator	Flygt	9850034	3152.091-027	20	hp		23	1745	460/230	29/59				Wet Well		3	3	Low
PS08	Mechanical System	MOTR	Motor	8-W-MO-2-WY	Motor - Pump 2	8-W-PU-2	2009	Operator	Flygt	9850035	3152.091-027	20	hp		23	1745	460/230	29/59				Wet Well		3	3	Low
PS08	Mechanical System	MOTR	Motor	8-W-MO-3-WY	Motor - Spare Pump	8-W-PU-3-WY	2014	Operator	Flygt	3153.095-0303	3153.095-1480011	20	hp		20	1755	460/230	26/52			0	Inside Structure		2	3	Low
PS08	Mechanical System	PUMP	Submersible Pump	8-W-PU-1	Submersible Pump 1		2009	Operator	Flygt	CP3152H-452		20	hp						6	117		Wet Well		3	4	Med-Low
PS08	Mechanical System	PUMP	Submersible Pump	8-W-PU-2	Submersible Pump 2		2009	Operator	Flygt	CP3152H-452		20	hp						6	117		Wet Well		3	4	Med-Low
PS08	Mechanical System	PUMP	Submersible Pump	8-W-PU-3-WY	Submersible Pump (Spare)		2014	Operator	Flygt	NP3153		20	hp								0	Inside Structure		3	4	Med-Low
PS08	Mechanical System	VALV	Air Release Valve	8-B-VA-5	ARV for Bypass		1980	Operator	Empire	0450A1		2	inch								0	Valve Vault		6	3	Medium
PS08	Mechanical System	VALV	Check Valve	8-B-VA-1	Check Valve for Bypass - Pump 1	8-W-PU-1	1980	Operator	Stockham	108-4		4	inch								0	Valve Vault		6	4	Med-High
PS08	Mechanical System	VALV	Check Valve	8-B-VA-2	Check Valve for Bypass - Pump 2	8-W-PU-2	1980	Operator	Stockham	108-4		4	inch								0	Valve Vault		6	4	Med-High
PS08	Mechanical System	VALV	Gate Valve	8-B-VA-3	Gate Valve for Bypass - Pump 1	8-W-PU-1	1980	Operator	Clow Valve	1-03-0617		4	inch								0	Valve Vault		6	6	High
PS08	Mechanical System	VALV	Gate Valve	8-B-VA-4	Gate Valve for Bypass - Pump 2	8-W-PU-2	1980	Operator	Clow Valve	1-03-0617		4	inch								0	Valve Vault		6	6	High
PS08	Mechanical System	VALV	Gate Valve	8-B-VA-6-WY	Gate Valve 1 in the ARV Vault		1980	Operator				4	inch								0	Valve Vault		6	9	High
PS08	Mechanical System	VALV	Gate Valve	8-B-VA-7-WY	Gate Valve 2 in the ARV Vault		1980	Operator				4	inch								0	Valve Vault		6	9	High
PS08	Site / Civil	ACCS	Access - Concrete	8-M-AW-1-WY	Site Paving		1980	Operator				1600	sq ft	Concrete							0	Outside Structure		4	3	Med-Low
PS08	Site / Civil	FENC	Fencing - Wood	8-M-EN-1-WY	Site Fencing		1980	Operator				150	LF	Wood							0	Outside Structure		6	3	Medium
PS08	Site / Civil	PIPE	Pump Discharge Piping	8-W-PI-1-WY	Discharge Piping in Wet Well - Pump 1	8-W-PU-1	1980	Operator				4	inch	DIP							0	Wet Well		4	4	Medium
PS08	Site / Civil	PIPE	Pump Discharge Piping	8-W-PI-2-WY	Discharge Piping in Wet Well - Pump 2	8-W-PU-2	1980	Operator				4	inch	DIP							0	Wet Well		4	4	Medium
PS08	Site / Civil	PIPE	Yard Piping	8-M-PI-1-WY	Force Main Piping		1980	Operator				6	inch								0			4	9	High
PS08	Site / Civil	SECR	Security Gate	8-M-SG-1-WY	Swing Gate	8-M-EN-1-WY	1980	Operator						Wood							0	Outside Structure		5	3	Medium
PS08	Site / Civil	SITE	Hoists	8-M-MR-1-WY	Monorail to Lift Pumps		1980	Operator						H Bar							0	Outside Structure		6	3	Medium
PS08	Site / Civil	TANK	Storage Tank - Concrete	8-S-TK-1-WY	Emergency Storage Tank		1980	Operator				6500	gal	Concrete							0		Located underground, east of wet well	6	6	High
PS08	Site / Civil	WATR	Water Service	8-R-WS-1-WY	Natural Gas Service Line		1980	Operator				1	inch	Copper							0	Inside Structure		4	4	Medium
PS08	Structural / Architec	BLDG	Structure	8-R-EN-1-WY	Structure Enclosing Electrical Cabinet & Generator		1980	Operator				225	sq ft	CMU							0		Roof material is shake.	4	4	Medium
PS08	Structural / Architec	SITE	Access Hatch	8-M-HA-1-WY	Valve Vault Hatch	8-M-VT-1-WY	1980	Operator						Galvanized Steel							0	Valve Vault		6	3	Medium
PS08	Structural / Architec	SITE	Access Hatch	8-M-HA-2-WY	ARV Vault Hatch	8-M-VT-2-WY	1980	Operator						Galvanized Steel							0	Valve Vault		6	3	Medium
PS08	Structural / Architec	SITE	Access Hatch	8-W-HA-1-WY	Wet Well Hatch	8-W-GL-1-WY	1980	Operator						Galvanized Steel							0	Wet Well		6	3	Medium
PS08	Structural / Architec	SITE	Vault	8-M-VT-1-WY	Valve Vault		1980	Operator						Concrete							0	Valve Vault		5	9	High
PS08	Structural / Architec	SITE	Vault	8-M-VT-2-WY	ARV and Force Main Vault		1980	Operator						Concrete							0	Valve Vault		5	9	High
PS08	Structural / Architec	SITE	Wet Well	8-W-GL-1-WY	Wet Well		1980	Operator						RCP							0	Wet Well		6	9	High
PS09	Electrical and Powe	ELEC	Auto Transfer Switch	9-E-AS-1	Automatic Transfer Switch		1980	est	Spectrum Detroit Diesel	RLS-164341-0150	K0685465	100	amps					100A			0	MCC		6	9	High
PS09	Electrical and Powe	ELEC	Control Panel	9-C-PP-1	Control Panel		1980	est	Hoffman	A673	24225-001										0	Inside Structure		8	9	High
PS09	Electrical and Powe	ELEC	Motor Starter	9-C-SR-1-WY	Starter - Pump 1	9-W-PU-1	1980	est				5	hp		5						0			6	4	Med-High
PS09	Electrical and Powe	ELEC	Motor Starter	9-C-SR-2-WY	Starter - Pump 2	9-W-PU-2	1980	est				5	hp		5						0			6	4	Med-High
PS09	Electrical and Powe	ELEC	Power Panel	9-C-PB-1	Panelboard		1980	est	GE	A-Series	AB313	30	Ckts				120/240V	125A			0	MCC		6	9	High
PS09	Electrical and Powe	ELEC	Power Panel	9-C-PB-2	Distribution Panel		1999		GE	A-Series	AB373	30	Ckts				120/240V	225A			0			4	9	High
PS09	Electrical and Powe	GENR	Generator	9-E-GE-1	Standby Generator - Diesel		2000	nameplate	Spectrum Detroit Diesel	4SGS	654901	45	kW								0	Inside Structure		4	4	Medium
PS09	Instrumentation / Co	CONT	Autodialer	9-C-VE-1	Autodialer		1980	est	RACO	Verbatim VSS	V10197										0	Inside Structure		6	4	Med-High
PS09	Instrumentation / Co	INST	Level Element - Bubbler	9-C-LE-1	Bubbler Level System		1980	est													0			6	4	Med-High
PS09	Mechanical System	COMP	Air Compressor/Receiver	9-B-CP-1	Air Compressor		1980	est	Comp Air	DIOCKO 7-168											0	Inside Structure		6	5	Med-High
PS09	Mechanical System	COMP	Air Compressor/Receiver	9-B-CP-2	Air Compressor for Bubbler		1980	est	Rietschle Thomas	107CAB18											0	MCC		6	5	Med-High
PS09	Mechanical System	COMP	Air Compressor/Receiver	9-B-CP-3	Air Compressor		1980	est	Rietschle Thomas	107CAB18											0	MCC		6	5	Med-High
PS09	Mechanical System	COUP	Quick Disconnect Coupling	9-B-QC-1	Coupling		1980	est	Smith-Blair	441		4	inch								0	Valve Vault	Looks newer than the piping	6	3	Medium
PS09	Mechanical System	COUP	Quick Disconnect Coupling	9-B-QC-2	Coupling		1980	est	Smith-Blair	441		4	inch								0	Valve Vault	Looks newer than the piping	6	3	Medium
PS09	Mechanical System	MOTR	Motor	9-W-MO-1-WY	Motor - Pump 1	9-W-PU-1	2012	Operator	Flygt			5	hp		5	1700	230					Wet Well		3	3	Low
PS09	Mechanical System	MOTR	Motor	9-W-MO-2-WY	Motor - Pump 2	9-W-PU-2	2012	Operator	Flygt			5	hp		5	1700	230					Wet Well		3	3	Low
PS09	Mechanical System	PUMP	Submersible Pump	9-W-PU-1	Submersible Pump 1		2012	Operator	Flygt	CP3102X-435	3102095-1280011	5	hp			1745			4	39	300	Wet Well		3	4	Med-Low
PS09	Mechanical System	PUMP	Submersible Pump	9-W-PU-2	Submersible Pump 2		2012	Operator	Flygt	CP3102X-435	3102095-1280012	5	hp			1745			4	39	0	Wet Well		3	4	Med-Low
PS09	Mechanical System	PUMP	Submersible Pump	9-W-PU-3	Submersible Pump (Spare)		2012	est	Flygt			5	hp			1715						Inside Structure		2	4	Med-Low
PS09	Mechanical System	VALV	Check Valve	9-B-VA-5	Ball Check Valve		1980	est	Amsterdam	DN100		4	inch								0	Valve Vault		6	7	High
PS09	Mechanical System	VALV	Check Valve	9-B-VA-6-WY	Ball Check Valve		1980	est	Amsterdam	DN100		4	inch								0	Valve Vault		6	7	High
PS09	Mechanical System	VALV	Gate Valve	9-B-VA-1	Gate Valve for Isolation		1980	est		1-030-067		4	inch								0	Valve Vault		6	9	High
PS09	Mechanical System	VALV	Gate Valve	9-B-VA-2	Gate Valve for Isolation		1980	est		1-030-067		4	inch								0	Valve Vault		6	9	High
PS09	Mechanical System	VALV	Gate Valve	9-B-VA-3	Gate Valve for Isolation		1980	est		1-030-067		4	inch								0	Valve Vault		6	9	High
PS09	Mechanical System	VALV	Gate Valve	9-B-VA-4	Gate Valve for Isolation		1980	est		1-030-067		4	inch								0	Valve Vault		6	9	High
PS09	Site / Civil	ACCS	Access - Asphalt	9-M-AW-1-WY	Site Paving		1980	est				1500	sq ft	Asphalt							0	Outside Structure		4	3	Med-Low
PS09	Site / Civil	FENC	Fencing - Wood	9-M-EN-1-WY	Site Fencing		2016	est				200	LF	Wood							0	Outside Structure		3	3	Low
PS09	Site / Civil	PIPE	Compressor Piping	9-C-PI-1-WY	Compressor Piping		1980	est				1	inch	Copper/Brass							0	Inside Structure		4	3	Med-Low
PS09	Site / Civil	PIPE	Pump Discharge Piping	9-W-PI-1-WY	Discharge Piping in Wet Well - Pump 1	9-W-PU-1	1980	est				4	inch	DIP							0	Wet Well		4	4	Medium
PS09	Site / Civil	PIPE	Pump Discharge Piping	9-W-PI-2-WY	Discharge Piping in Wet Well - Pump 2	9-W-PU-2	1980	est				4	inch	DIP							0	Wet Well		4	4	Medium
PS09	Site / Civil	PIPE	Yard Piping	9-M-PI-1-WY	Force Main Piping		1980	est				4	inch								0			4	9	High
PS09	Site / Civil	SITE	Manhole	9-M-MH-1-WY	Manhole (Located West of Building)		1980	est				48	inch	RCP							0	Outside Structure		4	9	High
PS09	Site / Civil	WATR	Water Service	9-R-WS-1-WY	Potable Water Service Line		1980	est				1	inch	Copper							0	Inside Structure		4	3	Med-Low
PS09	Structural / Architec	BLDG	Structure	9-R-EN-1-WY	Structure Enclosing Electrical Cabinet & Generator		1980	est				289	sq ft	Concrete							0		Roof material is shake.	4	4	Medium
PS09	Structural / Architec	SITE	Access Hatch	9-M-HA-1-WY	Valve Vault Hatch	9-M-VT-1-WY	1980	est				4 x 6	sq ft	Aluminum							0	Valve Vault		6	3	Medium
PS09	Structural / Architec	SITE	Access Hatch	9-M-HA-2-WY	Overflow Connection Vault Hatch	9-M-VT-2-WY	1980	est				4 x 6	sq ft	Aluminum							0			6	3	Medium
PS09	Structural / Architec	SITE	Access Hatch	9-W-HA-1-WY	Wet Well Hatch	9-W-GL-1-WY	1980	est						Aluminum							0	Wet Well		6	3	Medium
PS09	Structural / Architec	SITE	Hoists	9-M-MR-1-WY	Monorail to Lift Pumps		1980	est						Galvanized Steel							0	Outside Structure		6	3	Medium
PS09	Structural / Architec	SITE	Vault	9-M-VT-1-WY	Valve Vault		1980	est				4 x 6	sq ft	Concrete							0	Outside Structure		5	9	High
PS09	Structural / Architec	SITE	Vault	9-M-VT-2-WY	Overflow Connection Vault		1980	est				4 x 6	sq ft	Concrete							0	Outside Structure		5	9	High
PS09	Structural / Architec	SITE	Wet Well	9-W-GL-1-WY	Wet Well		1980	est				7	ft	RCP with T-Lock liner							0	Outside Structure		5	9	High
PS11	Electrical and Powe	ELEC	Auto Transfer Switch	11-E-AS-1	Automatic Transfer Switch		2005	Operator	ASCO	7000	284004FP	100	amps				240V	100A			0	Inside Structure		3	9	Med-High
PS11	Electrical and Powe	ELEC	Control Panel	11-C-PP-1	Control Panel		2005	Operator	KBL	2422-ML-100							240V	150A			0			3	9	Med-High
PS11	Electrical and Powe	ELEC	Motor Starter	11-C-SR-1-WY	Starter - Pump 1	11-W-PU-1	2005	Operator	Cutler-Hammer	AN16DN0		7.5	hp		7.5			27A			0			4	4	Medium
PS11	Electrical and Powe	ELEC	Motor Starter	11-C-SR-2-WY	Starter - Pump 2	11-W-PU-2	2005	Operator	Cutler-Hammer	AN16DN0		7.5	hp		7.5			27A			0			4	4	Medium

Appendix A. Asset Registry for Lucity™ Update

Facility	Category	Asset Class	Asset Subclass	AssetID	Description	Parent Component	Purchase Year	Purchase Source	Manufacturer	Model	Serial No.	Size	Units	Material	HP	Speed	Voltage	Amps	Duty (GPM)	Duty (TDH)	Impeller Dia.	Location	Comments	LOF	COF	Risk Level
PS11	Electrical and Powe	ELEC	Power Panel	11-C-PB-1	Panelboard		2005	Operator	Eaton	PRL1a		18	Ckts				120/240V	225A			0			3	9	Med-High
PS11	Electrical and Powe	GENR	Generator	11-E-GE-1	Standby Generator - Natural Gas		2004	nameplate	Loadtec	0DL2-0040.1	250037	56.3	kVA				120/240V	135A			0	Inside Structure		3	4	Med-Low
PS11	Instrumentation / Co	CONT	Autodialer	11-C-VE-1	Autodialer		2005	Operator	RACO	Verbatim VSS	15308										0	Inside Structure		3	4	Med-Low
PS11	Instrumentation / Co	INST	Level Element - Float	11-W-FL-1	Level Float Switches		2005	Operator													0			4	4	Medium
PS11	Instrumentation / Co	INST	Level Element - Sensor	11-C-LE-1	Level Transmitter and Sensor		2005	Operator	Milltronics	Hydro Ranger 200	100804101VU										0			4	4	Medium
PS11	Mechanical System	COUP	Quick Disconnect Coupling	11-B-QC-1	Coupling for Bypass	11-B-PI-1-WY	2005	Operator	Victaulic	31		4	inch								0	Valve Vault		3	3	Low
PS11	Mechanical System	COUP	Quick Disconnect Coupling	11-B-QC-2	Coupling for Bypass	11-B-PI-1-WY	2005	Operator	Victaulic	31		4	inch								0	Valve Vault		3	3	Low
PS11	Mechanical System	COUP	Quick Disconnect Coupling	11-B-QC-3	Coupling for Force Main - Pump 1	11-W-PU-1	2005	Operator	Victaulic	31		4	inch								0	Valve Vault		3	3	Low
PS11	Mechanical System	COUP	Quick Disconnect Coupling	11-B-QC-4	Coupling for Force Main - Pump 2	11-W-PU-2	2005	Operator	Victaulic	31		4	inch								0	Valve Vault		3	3	Low
PS11	Mechanical System	COUP	Quick Disconnect Coupling	11-B-QC-5-WY	Coupling for Bypass	11-B-PI-1-WY	2005	Operator	Victaulic	31		4	inch								0	Valve Vault		3	3	Low
PS11	Mechanical System	MOTR	Motor	11-W-MO-1-WY	Motor - Pump 1	11-W-PU-1	2005	Operator	Flygt	3127.090-1960	3127.090-0450144	7.5	hp			1740 rpm	460-230	9.6-19			0	Wet Well	Curve Code: 489	3	3	Low
PS11	Mechanical System	MOTR	Motor	11-W-MO-2-WY	Motor - Pump 2	11-W-PU-2	2005	Operator	Flygt	3127.090-1960	3127.090-0450144	7.5	hp			1740 rpm	460-230	9.6-19			0	Wet Well	Curve Code: 489	3	3	Low
PS11	Mechanical System	PUMP	Submersible Pump	11-W-PU-1	Submersible Pump 1		2005	Operator	Flygt			7.5	hp						125	55	0	Wet Well		3	4	Med-Low
PS11	Mechanical System	PUMP	Submersible Pump	11-W-PU-2	Submersible Pump 2		2005	Operator	Flygt			7.5	hp						125	55	0	Wet Well		3	4	Med-Low
PS11	Mechanical System	VALV	Check Valve	11-B-VA-8	Check Valve for Pump 1	11-W-PU-1	2005	Operator	Val-Matic	504 A		4	inch								0	Valve Vault		3	7	Medium
PS11	Mechanical System	VALV	Check Valve	11-B-VA-9	Check Valve for Pump 2	11-W-PU-2	2005	Operator	Val-Matic	504 A		4	inch								0	Valve Vault		3	7	Medium
PS11	Mechanical System	VALV	Knife Valve	11-B-VA-1	Knife Valve for Bypass	11-B-PI-1-WY	2005	Operator	AC Valve	76-4	360-225-8003	4	inch								0	Valve Vault		3	6	Medium
PS11	Mechanical System	VALV	Knife Valve	11-B-VA-2	Knife Valve for Bypass	11-B-PI-1-WY	2005	Operator	AC Valve	76-4	360-225-8003	4	inch								0	Valve Vault		3	6	Medium
PS11	Mechanical System	VALV	Knife Valve	11-B-VA-3	Knife Valve for Bypass	11-B-PI-1-WY	2005	Operator	AC Valve	76-4	360-225-8003	4	inch								0	Valve Vault		3	6	Medium
PS11	Mechanical System	VALV	Knife Valve	11-B-VA-4	Knife Valve for Bypass	11-B-PI-1-WY	2005	Operator	AC Valve	76-4	360-225-8003	4	inch								0	Valve Vault		3	6	Medium
PS11	Mechanical System	VALV	Knife Valve	11-B-VA-5	Knife Valve for Bypass	11-B-PI-1-WY	2005	Operator	AC Valve	76-4	360-225-8003	4	inch								0	Valve Vault		3	6	Medium
PS11	Mechanical System	VALV	Knife Valve	11-B-VA-6	Knife Valve for Bypass	11-B-PI-1-WY	2005	Operator	AC Valve	76-4	360-225-8003	4	inch								0	Valve Vault		3	6	Medium
PS11	Mechanical System	VALV	Knife Valve	11-B-VA-7	Knife Valve for Bypass	11-B-PI-1-WY	2005	Operator	AC Valve	76-4	360-225-8003	4	inch								0	Valve Vault		3	6	Medium
PS11	Site / Civil	PIPE	Bypass Piping	11-B-PI-1-WY	Bypass Piping		2005	Operator				4	inch								0			2	4	Med-Low
PS11	Site / Civil	PIPE	Pump Discharge Piping	11-W-PI-1-WY	Discharge Piping in Wet Well - Pump 1	11-W-PU-1	2005	Operator				4	inch	Ductile Iron							0	Wet Well		3	4	Med-Low
PS11	Site / Civil	PIPE	Pump Discharge Piping	11-W-PI-2-WY	Discharge Piping in Wet Well - Pump 2	11-W-PU-2	2005	Operator				4	inch	Ductile Iron							0	Wet Well		3	4	Med-Low
PS11	Site / Civil	PIPE	Yard Piping	11-M-PI-1-WY	Force Main Piping		2005	Operator				4	inch								0	Valve Vault		3	9	Med-High
PS11	Site / Civil	SITE	Drain	11-M-DR-1-WY	Trench Drain		2005	Operator						Cast Iron							0	Valve Vault	Drain prevents runoff from street from entering vaults.	2	3	Low
PS11	Structural / Architec	BLDG	Structure	11-R-EN-1-WY	Structure Enclosing Electrical Cabinet & Generator		2005	Operator				208	sq ft	CMU with Stone Facade							0		Roof material is metal.	2	4	Med-Low
PS11	Structural / Architec	SITE	Access Hatch	11-M-HA-1-WY	Valve Vault Hatch	11-M-VT-1-WY	2005	Operator				6 x 8	sq ft	Aluminum							0			3	3	Low
PS11	Structural / Architec	SITE	Access Hatch	11-W-HA-1-WY	Wet Well Hatch	11-W-GL-1-WY	2005	Operator				42 x 54	sq inches	Steel							0	Wet Well		3	3	Low
PS11	Structural / Architec	SITE	Vault	11-M-VT-1-WY	Valve Vault		2005	Operator				6 x 8	sq ft	Concrete							0			3	9	Med-High
PS11	Structural / Architec	SITE	Wet Well	11-W-GL-1-WY	Wet Well		2005	Operator				7	ft	Concrete with T-Lock Liner							0	Wet Well		3	9	Med-High

APPENDIX B

Condition Assessment Report

FINAL REPORT | JANUARY 2018

Wastewater Pump Stations Condition Assessment

Prepared for

Castro Valley Sanitary District

Project No. 455-20-16-08

Inspection Team:

Ty Tadano, Roya Joseph – West Yost Associates

Jacqueline Okubo –TJC and Associates

Inspection Dates:

April 12 – 13, 2017

WEST YOST ASSOCIATES

Pump Station No. 1

Year Originally Constructed	Year of Latest Upgrade
1949	
Address	
22438 Moyers Street	
Emergency Generator	**Bypass Equipment**
Hookups for Portable Generator	No Bypass Equipment
On-Site Storage Capacity (gal)	**Force Main Diameter (inches)**
unknown	4
Facility Description	
Station serves 14 single-family homes	

Inspection Notes

A broken storm drain is causing erosion on adjacent property that may eventually cause a problem for wet well structure.

Operator Concerns

Wet well has high level alarm. Alarm system does not specify which pump is unoperational.

Recommended Site Improvements

- Small station requires complete overhaul. More cost effective to replace station. Relocate outside the residential backyard.
- County should fix the storm drain to prevent site erosion.

Pump Station No. 1

Condition Rating Index:
1 - Excellent
2 - Slight Visible Degradation
3 - Visible Degradation
4 - Integrity Moderately Compromised
5 - Integrity Severely Compromised

Performance Rating Index:
1 - Functioning as Intended
2 - In Service, High OM Costs
3 - In Service, Function Impaired
4 - In Service, Function Highly Impaired
5 - Not Functioning as Intended

Site / Civil

Asset: 1-M-AW-1-WY, Site Paving

Size / Material
Concrete

Purchase Year
1995 (est)

Comments
Site paving owned by homeowner.

Condition Rating: 2
Performance Rating: 1
Standard Useful Life: 50 years
Remaining Life: 27 years
Notes:

Improvement:

Asset: 1-M-EN-1-WY, Site Fencing

Size / Material
Chain Link

Purchase Year
1995 (est)

Comments
Fencing owned by homeowner

Condition Rating: 2
Performance Rating: 1
Standard Useful Life: 40 years
Remaining Life: 17 years
Notes:

Improvement:

Asset: 1-M-PI-1-WY, Force Main Piping

Size / Material
4 inch, Steel

Purchase Year
1949 (Operator)

Comments
Wood blocks are used as a pipe support for forcemain

Condition Rating: 3
Performance Rating: 1
Standard Useful Life: 50 years
Remaining Life: 0 years
Notes: Coating peeling.

Improvement: Recoat forcemain piping. Install permanent pipe supports.

Pump Station No. 1

Site / Civil

Asset: 1-B-VA-5-WY, Gate Valve for Force Main
Subcomponent to: 1-M-PI-1-WY

Size/Material	Volts/Amps/HP/Speed	Purchase Year
4 inch		1995 (Operator)

Manufacturer/Model
Clow Valve

Serial Number

Comment Field

Condition Rating: 2
Performance Rating: 1
Standard Useful Life: 30 years
Remaining Life: 7 years
Notes:

Improvement:

Pump Station No. 1

Structural / Architectural

Asset: 1-M-VT-1-WY, Valve Vault

Size / Material	Condition Rating 3	Purchase Year
8 x 7.5 sq ft, Concrete	**Performance Rating:** 1	1949 (Operator)
Manufacturer/Model	**Standard Useful Life:** 40 years	
	Remaining Life: 0 years	
Serial Number	**Notes:** Surface spalling corrosion on concrete walls.	
Comments	**Improvement:** Repair underlying concrete and coat vault interior.	

Asset: 1-M-HA-1-WY, Valve Vault Hatch
Subcomponent to: 1-M-VT-1-WY

Size/Material	Volts/Amps/HP/Speed	Purchase Year
6 x 6 sq ft, Aluminum		1949 (Operator)
Manufacturer/Model	**Condition Rating:** 3	
	Performance Rating: 1	
Serial Number	**Standard Useful Life:** 20 years	
	Remaining Life: 0 years	
Comment Field	**Notes:** Springs are corroded.	
	Improvement: Replace with Bilco aluminum spring-assisted hatch with safety grates.	

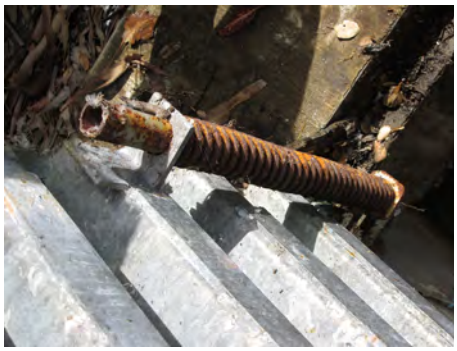

Pump Station No. 1

Structural / Architectural

Asset: 1-W-GL-1-WY, Wet Well

Size / Material	Condition Rating 2	Purchase Year
4 x 8 sq ft, Concrete	**Performance Rating:** 1	1949 (Operator)
Manufacturer/Model	**Standard Useful Life:** 40 years	
	Remaining Life: 0 years	
Serial Number	**Notes:** Minor corrosion of concrete. Ladder is corroded.	
Comments	**Improvement:**	

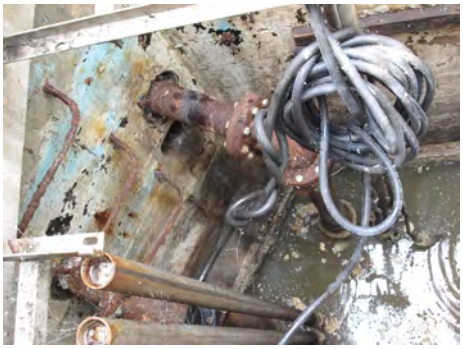

Asset: 1-W-HA-1-WY, Wet Well Hatch
Subcomponent to: 1-W-GL-1-WY

Size/Material	Volts/Amps/HP/Speed	Purchase Year
4 x 4 sq ft, Steel		1949 (Operator)
Manufacturer/Model	**Condition Rating:** 2	
	Performance Rating: 1	
Serial Number	**Standard Useful Life:** 20 years	
	Remaining Life: 0 years	
Comment Field	**Notes:** Needs spring assist and safety grates.	
	Improvement: Replace with Bilco aluminum spring-assisted hatch with safety grates.	

Pump Station No. 1

Mechanical Systems

Asset: 1-W-PU-1, Submersible Pump 1 (North)

Size/Material	Volts/Amps/HP/Speed	Purchase Year
3 hp		2016 (Work Orders)

Manufacturer/Model
Flygt, CP3085X-434

Duty (gpm) / Duty (TDH)
150 gpm, 28 ft

Serial Number

Condition Rating: 2
Performance Rating: 1
Standard Useful Life: 20 years
Remaining Life: 18 years
Notes: Minimal ragging issues

Comments

Improvement:

Asset: 1-B-VA-1, Gate Valve - Pump 1
Subcomponent to: 1-W-PU-1

Size/Material	Volts/Amps/HP/Speed	Purchase Year
4 inch		1995 (Operator)

Manufacturer/Model
Clow Valve

Serial Number

Condition Rating: 2
Performance Rating: 1
Standard Useful Life: 30 years
Remaining Life: 7 years
Notes:

Comment Field

Improvement:

Asset: 1-B-VA-3, Check Valve - Pump 1
Subcomponent to: 1-W-PU-1

Size/Material	Volts/Amps/HP/Speed	Purchase Year
4 inch		1995 (Operator)

Manufacturer/Model
Matco, 3781002575

Serial Number

Condition Rating: 3
Performance Rating: 1
Standard Useful Life: 25 years
Remaining Life: 2 years
Notes: Corrosion at nuts

Comment Field

Improvement: Coat valves

Pump Station No. 1

Mechanical Systems

Asset: 1-C-VF-1, VFD - Pump 1
Subcomponent to: 1-W-PU-1

Size/Material	Volts/Amps/HP/Speed	Purchase Year
3 hp	240V V	2006 (nameplate)

Manufacturer/Model
Titan, C1-0050-GS2

Serial Number
06101200041

Comment Field

Condition Rating: 1
Performance Rating: 1
Standard Useful Life: 15 years
Remaining Life: 3 years
Notes:

Improvement:

Asset: 1-W-MO-1-WY, Motor - Pump 1
Subcomponent to: 1-W-PU-1

Size/Material	Volts/Amps/HP/Speed	Purchase Year
3 hp	230 V, 3 hp, 1710 RPM	2016 (Operator)

Manufacturer/Model

Serial Number

Comment Field

Condition Rating: 2
Performance Rating: 1
Standard Useful Life: 30 years
Remaining Life: 28 years
Notes:

Improvement:

Asset: 1-W-PI-1-WY, Discharge Pipe - Pump 1
Subcomponent to: 1-W-PU-1

Size/Material	Volts/Amps/HP/Speed	Purchase Year
4 inch		1949 (Operator)

Manufacturer/Model

Serial Number

Comment Field

Condition Rating: 2
Performance Rating: 1
Standard Useful Life: 50 years
Remaining Life: 0 years
Notes: Corrosion on flanges

Improvement: Coat discharge piping.

Pump Station No. 1

Mechanical Systems

Asset: 1-W-PU-2, Submersible Pump 2 (South)

Size/Material	Volts/Amps/HP/Speed	Purchase Year
3 hp		2002 (Work Orders)

Manufacturer/Model
Flygt, CP3085X-434

Serial Number

Comments

Duty (gpm) / Duty (TDH)
150 gpm, 28 ft

Condition Rating: 2
Performance Rating: 1
Standard Useful Life: 20 years
Remaining Life: 4 years
Notes: Minimal ragging issues

Improvement:

Asset: 1-B-VA-2-WY, Gate Valve - Pump 2
Subcomponent to: 1-W-PU-2

Size/Material	Volts/Amps/HP/Speed	Purchase Year
4 inch		1995 (Operator)

Manufacturer/Model
Clow Valve

Serial Number

Comment Field

Condition Rating: 2
Performance Rating: 1
Standard Useful Life: 30 years
Remaining Life: 7 years
Notes: Valve actuator is missing.

Improvement: Replace actuator.

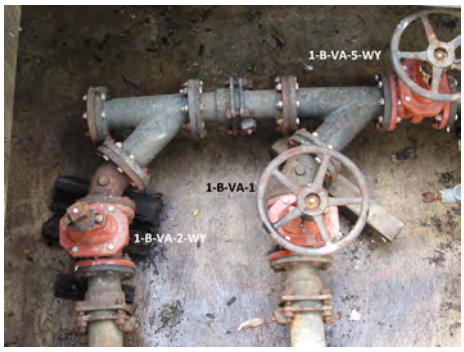

Asset: 1-B-VA-4-WY, Check Valve - Pump 2
Subcomponent to: 1-W-PU-2

Size/Material	Volts/Amps/HP/Speed	Purchase Year
4 inch		1995 (Operator)

Manufacturer/Model
Matco, 3781002575

Serial Number

Comment Field

Condition Rating: 3
Performance Rating: 1
Standard Useful Life: 25 years
Remaining Life: 2 years
Notes: Corrosion at nuts

Improvement: Coat valves

Pump Station No. 1

Mechanical Systems

Asset: 1-C-VF-2, VFD - Pump 2
Subcomponent to: 1-W-PU-2

Size/Material	Volts/Amps/HP/Speed	Purchase Year
3 hp	240V V	2006 (nameplate)

Manufacturer/Model
Titan, C1-0050-GS2

Serial Number
06101200048

Comment Field

Condition Rating: 1
Performance Rating: 1
Standard Useful Life: 15 years
Remaining Life: 3 years
Notes:

Improvement:

Asset: 1-W-MO-2-WY, Motor - Pump 2
Subcomponent to: 1-W-PU-2

Size/Material	Volts/Amps/HP/Speed	Purchase Year
3 hp	230 V, 3 hp, 1710 RPM	2002 (Operator)

Manufacturer/Model

Serial Number

Comment Field

Condition Rating: 2
Performance Rating: 1
Standard Useful Life: 30 years
Remaining Life: 14 years
Notes:

Improvement:

Asset: 1-W-PI-2-WY, Discharge Pipe - Pump 2
Subcomponent to: 1-W-PU-2

Size/Material	Volts/Amps/HP/Speed	Purchase Year
4 inch		1949 (Operator)

Manufacturer/Model

Serial Number

Comment Field

Condition Rating: 2
Performance Rating: 1
Standard Useful Life: 50 years
Remaining Life: 0 years
Notes: Corrosion on flanges

Improvement: Coat discharge piping.

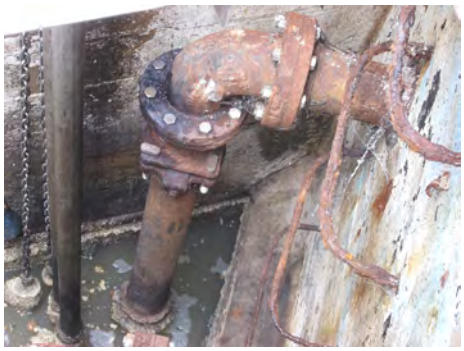

Pump Station No. 1

Electrical and Power Systems

Asset: 1-C-PB-1, Panelboard

Size			
Manufacturer/Model			
Square D, Q08-164000			
Serial Number			
Volts	**Amps**	**HP**	**Speed**
120/240V	100A		
Comments			

Condition Rating: 1
Performance Rating: 1
Standard Useful Life: 20 years
Remaining Life: 0 years
Notes:

Improvement:

Purchase Year
1995 (est)

Asset: 1-C-PP-1, Control Panel

Size			
Manufacturer/Model			
Serial Number			
Volts	**Amps**	**HP**	**Speed**
Comments			

Condition Rating: 2
Performance Rating: 3
Standard Useful Life: 20 years
Remaining Life: 0 years
Notes: Pilot lights don't work

Improvement: Replace non-functioning pilot lights with new.

Purchase Year
1995 (est)

Asset: 1-E-REC-1, Generator Receptacle

Size			
Manufacturer/Model			
Serial Number			
Volts	**Amps**	**HP**	**Speed**
240V	50A		
Comments			
Mtd. On PG&E panel			

Condition Rating: 2
Performance Rating: 1
Standard Useful Life: 20 years
Remaining Life: 0 years
Notes:

Improvement:

Purchase Year
1995 (est)

Pump Station No. 1

Instrumentation / Controls

Asset: 1-C-DL-1, Level Transmitter and Sensor

Size	
Manufacturer/Model	
Milltronics, HydroRanger 200	
Serial Number	
Volts	**Amps**
Comments	

Condition Rating: 1
Performance Rating: 1
Standard Useful Life: 15 years
Remaining Life: 0 years
Notes:

Improvement:

Purchase Year
1995 (est)

Asset: 1-C-VE-1, Autodialer

Size	
Manufacturer/Model	
RACO, Verbatim VSS	
Serial Number	
V11123	
Volts	**Amps**
Comments	

Condition Rating: 1
Performance Rating: 1
Standard Useful Life: 20 years
Remaining Life: 0 years
Notes:

Improvement:

Purchase Year
1995 (est)

Asset: 1-W-FL-1, Level Float Switches

Size	
Manufacturer/Model	
Flygt	
Serial Number	
Volts	**Amps**
Comments	

Condition Rating: 1
Performance Rating: 1
Standard Useful Life: 15 years
Remaining Life: 0 years
Notes:

Improvement:

Purchase Year
1995 (est)

Pump Station No. 3

Year Originally Constructed	Year of Latest Upgrade
1959	2015
Address	
16978 Grovenor Drive	
Emergency Generator	**Bypass Equipment**
On-Site Generator	Bypass Quick-Connects
On-Site Storage Capacity (gal)	**Force Main Diameter (inches)**
9,132 gal; 4 hours (ADWF)	8
Facility Description	
The Station underwent a major rehabilitation in 2015.	

Inspection Notes

- CVSan staff would like to know if propane can be used for emergency generator if natural gas service is interrupted.
- Inspection team was unable to enter dry pit because the gas monitors were not working.

Operator Concerns

- Generator is old, some parts may be obsolete.
- Only 45 minutes of storage time on site.

Recommended Site Improvements

Install more secure ladder extension poles or Davit cranes for safety.

Pump Station No. 3

Condition Rating Index:
1 - Excellent
2 - Slight Visible Degradation
3 - Visible Degradation
4 - Integrity Moderately Compromised
5 - Integrity Severely Compromised

Performance Rating Index:
1 - Functioning as Intended
2 - In Service, High OM Costs
3 - In Service, Function Impaired
4 - In Service, Function Highly Impaired
5 - Not Functioning as Intended

Site / Civil

Asset: 3-M-AW-1-WY, Site Paving

Size / Material	Condition Rating: 1
1,500 sq ft, Asphalt	Performance Rating: 1
Purchase Year	Standard Useful Life: 50 years
2015 (Operator)	Remaining Life: 47 years
Comments	Notes:
	Improvement:

Asset: 3-M-EN-1-WY, Site Fencing

Size / Material	Condition Rating: 1
125 LF, Chain Link	Performance Rating: 1
Purchase Year	Standard Useful Life: 40 years
2015 (Operator)	Remaining Life: 37 years
Comments	Notes:
	Improvement:

Asset: 3-M-SG-1-WY, Rolling Gate
Subcomponent to: 3-M-EN-1-WY

Size/Material	Volts/Amps/HP/Speed	Purchase Year
Chain Link		2015 (Operator)

Manufacturer/Model	Condition Rating: 1
	Performance Rating: 1
Serial Number	Standard Useful Life: 40 years
	Remaining Life: 37 years
Comment Field	Notes:
	Improvement:

Pump Station No. 3

Site / Civil

Asset: 3-M-PI-1-WY, Force Main Piping

Size / Material	Condition Rating: -
8 inch	Performance Rating: -
Purchase Year	Standard Useful Life: 50 years
1959 (est)	Remaining Life: 0 years
Comments	Notes:
	Improvement:

Asset: 3-S-TK-1-WY, Emergency Storage Tank

Size / Material	Condition Rating:
5,000 gal	Performance Rating:
Purchase Year	Standard Useful Life: 30 years
2015 (Operator)	Remaining Life: 27 years
Comments	Notes:
	Improvement:

Asset: 3-S-HA-1-WY, Storage Tank Hatch
Subcomponent to: 3-S-TK-1-WY

Size/Material	Volts/Amps/HP/Speed	Purchase Year
Aluminum		2015 (Operator)

Manufacturer/Model	Condition Rating: 1
	Performance Rating: 1
Serial Number	Standard Useful Life: 20 years
	Remaining Life: 17 years
Comment Field	Notes:
Hatch has safety grate	Improvement:

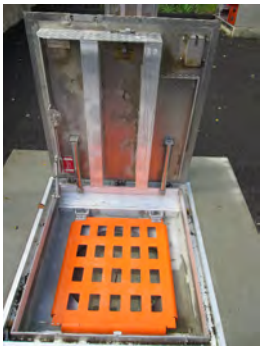

Pump Station No. 3

Structural / Architectural

Asset: 3-B-VT-1-WY, Bypass Vault

Size / Material	Condition Rating 1	Purchase Year
6 x 3.5 sq ft	Performance Rating: 1	2014 (Operator)
Manufacturer/Model	Standard Useful Life: 40 years	
	Remaining Life: 36 years	
Serial Number	Notes:	
Comments	Improvement:	

Asset: 3-B-HA-1-WY, Bypass Vault Hatch
Subcomponent to: 3-B-VT-1-WY

Size/Material	Volts/Amps/HP/Speed	Purchase Year
6 x 3.5 sq ft, Aluminum		2014 (Operator)
Manufacturer/Model	Condition Rating: 1	
Nystrom	Performance Rating: 1	
Serial Number	Standard Useful Life: 20 years	
	Remaining Life: 16 years	
Comment Field	Notes:	
	Improvement:	

Asset: 3-B-PI-1, 4-way Tee for Bypass Connection
Subcomponent to: 3-B-VT-1-WY

Size/Material	Volts/Amps/HP/Speed	Purchase Year
		2014 (Operator)
Manufacturer/Model	Condition Rating: 1	
Star, FXDG	Performance Rating: 1	
Serial Number	Standard Useful Life: 30 years	
CH0D1250	Remaining Life: 26 years	
Comment Field	Notes:	
	Improvement:	

Pump Station No. 3

Structural / Architectural

Asset: 3-B-QC-3, Quick Coupling for Bypass
Subcomponent to: 3-B-VT-1-WY

Size/Material	Volts/Amps/HP/Speed	Purchase Year
6 inch		2014 (Operator)

Manufacturer/Model
SCI, 125

Serial Number

Comment Field
Not Seen in the Field

Condition Rating: 1
Performance Rating: 1
Standard Useful Life: 20 years
Remaining Life: 16 years
Notes:

Improvement:

Asset: 3-B-VA-3, Knife Valve for Bypass
Subcomponent to: 3-B-VT-1-WY

Size/Material	Volts/Amps/HP/Speed	Purchase Year
6 inch		2014 (Operator)

Manufacturer/Model
Kennedy, KS-FW

Serial Number
057DHy

Comment Field

Condition Rating: 1
Performance Rating: 1
Standard Useful Life: 30 years
Remaining Life: 26 years
Notes:

Improvement:

Asset: 3-B-VA-4, Check Valve for Bypass
Subcomponent to: 3-B-VT-1-WY

Size/Material	Volts/Amps/HP/Speed	Purchase Year
6 inch		2014 (Operator)

Manufacturer/Model
APCO, 106H-1

Serial Number

Comment Field

Condition Rating: 1
Performance Rating: 1
Standard Useful Life: 25 years
Remaining Life: 21 years
Notes:

Improvement:

Pump Station No. 3

Structural / Architectural

Asset: 3-D-GL-1-WY, Dry Well

Size / Material	Condition Rating -	Purchase Year
Steel	Performance Rating: -	1959 (Operator)
Manufacturer/Model	Standard Useful Life: 40 years	
Smith & Loveless	Remaining Life: 0 years	
Serial Number	Notes: Unable to enter.	
Comments	Improvement:	

Asset: 3-D-HA-1-WY, Dry Well Hatch
Subcomponent to: 3-D-GL-1-WY

Size/Material	Volts/Amps/HP/Speed	Purchase Year
3 x 3 sq ft, Aluminum		2014 (Operator)
Manufacturer/Model	Condition Rating: 1	
Nystrom	Performance Rating: 1	
Serial Number	Standard Useful Life: 20 years	
	Remaining Life: 16 years	
Comment Field	Notes:	
	Improvement:	

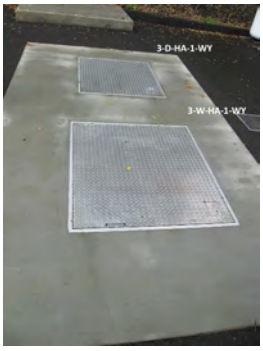

Asset: 3-W-PU-3-WY, Sump Pump in Dry Well
Subcomponent to: 3-D-GL-1-WY

Size/Material	Volts/Amps/HP/Speed	Purchase Year
1 hp		2012 (Work Order)
Manufacturer/Model	Condition Rating: -	
	Performance Rating: -	
Serial Number	Standard Useful Life: 10 years	
	Remaining Life: 4 years	
Comment Field	Notes:	
	Improvement:	

Pump Station No. 3

Structural / Architectural

Asset: 3-M-VT-1-WY, Pig Launching Vault

Size / Material	Condition Rating 1	Purchase Year
5 x 3.5 sq ft	Performance Rating: 1	2014 (Operator)
Manufacturer/Model	Standard Useful Life: 40 years	
	Remaining Life: 36 years	
Serial Number	Notes:	
Comments		
	Improvement:	

Asset: 3-M-HA-1-WY, Pig Launching Vault Hatch
Subcomponent to: 3-M-VT-1-WY

Size/Material	Volts/Amps/HP/Speed	Purchase Year
5 x 3.5 sq ft, Aluminum		2014 (Operator)
Manufacturer/Model	Condition Rating: 1	
Nystrom	Performance Rating: 1	
Serial Number	Standard Useful Life: 20 years	
	Remaining Life: 16 years	
Comment Field	Notes:	
	Improvement:	

Asset: 3-R-EN-1-WY, Structure Enclosing Electrical Cabinet & Generator

Size / Material	Condition Rating 2	Purchase Year
192 sq ft, CMU	Performance Rating: 1	1959 (Operator)
Manufacturer/Model	Standard Useful Life: 50 years	
	Remaining Life: 0 years	
Serial Number	Notes:	
Comments		
12 ft x 16 ft. Composite tile roof replaced in 2007.	Improvement:	

Pump Station No. 3

Structural / Architectural

Asset: 3-W-GL-1-WY, Wet Well

Size / Material
4 ft, Concrete

Manufacturer/Model

Serial Number

Comments
Top half was built in 2014, bottom half is original construction/installation.

Condition Rating 2
Performance Rating: 1
Standard Useful Life: 40 years
Remaining Life: 36 years
Notes: Small groundwater leakage into wetwell at edge of old patch/penetration. Ladder is corroded.
Improvement:

Purchase Year
2014 (Operator)

Asset: 3-W-HA-1-WY, Wet Well Hatch
Subcomponent to: 3-W-Gl-1-WY

Size/Material
3.5 x 3.5 sq ft, Aluminum

Manufacturer/Model
Nystrom

Serial Number

Comment Field

Volts/Amps/HP/Speed

Condition Rating: 1
Performance Rating: 1
Standard Useful Life: 20 years
Remaining Life: 16 years
Notes:

Improvement:

Purchase Year
2014 (Operator)

Pump Station No. 3

Mechanical Systems

Asset: 3-B-QC-1, Quick Snap-joint Coupling for Pigging

Size/Material	Volts/Amps/HP/Speed	Purchase Year
6 inch		2014 (Operator)
Manufacturer/Model	**Duty (gpm) / Duty (TDH)**	
Victaulic , 78		
Serial Number	**Condition Rating:** 1	
	Performance Rating: 1	
Comments	**Standard Useful Life:** 20 years	
	Remaining Life: 16 years	
	Notes:	
	Improvement:	

Asset: 3-B-QC-2, Quick Snap-joint Coupling for Pigging

Size/Material	Volts/Amps/HP/Speed	Purchase Year
6 inch		2014 (Operator)
Manufacturer/Model	**Duty (gpm) / Duty (TDH)**	
Victaulic , 78		
Serial Number	**Condition Rating:** 1	
	Performance Rating: 1	
Comments	**Standard Useful Life:** 20 years	
	Remaining Life: 16 years	
	Notes:	
	Improvement:	

Pump Station No. 3

Mechanical Systems

Asset: 3-B-QC-4-WY, Coupling for Pigging

Size/Material	Volts/Amps/HP/Speed	Purchase Year
6 inch		2014 (Operator)
Manufacturer/Model	**Duty (gpm) / Duty (TDH)**	
Victaulic		
Serial Number	**Condition Rating:** 1	
	Performance Rating: 1	
Comments	**Standard Useful Life:** 20 years	
	Remaining Life: 16 years	
	Notes:	
	Improvement:	

Asset: 3-B-QC-5-WY, Coupling for Pigging

Size/Material	Volts/Amps/HP/Speed	Purchase Year
6 inch		2014 (Operator)
Manufacturer/Model	**Duty (gpm) / Duty (TDH)**	
Victaulic		
Serial Number	**Condition Rating:** 1	
	Performance Rating: 1	
Comments	**Standard Useful Life:** 20 years	
	Remaining Life: 16 years	
	Notes:	
	Improvement:	

Pump Station No. 3

Mechanical Systems

Asset: 3-B-VA-1, Gate Valve for Pigging

Size/Material	Volts/Amps/HP/Speed	Purchase Year
6 inch		2014 (Operator)
Manufacturer/Model	**Duty (gpm) / Duty (TDH)**	
AVK , 45-15032		
Serial Number	**Condition Rating:** 3	
	Performance Rating: 1	
Comments	**Standard Useful Life:** 30 years	
	Remaining Life: 26 years	
	Notes:	
	Improvement:	

Asset: 3-B-VA-2, Gate Valve for Pigging

Size/Material	Volts/Amps/HP/Speed	Purchase Year
6 inch		2014 (Operator)
Manufacturer/Model	**Duty (gpm) / Duty (TDH)**	
AVK , 45-15032		
Serial Number	**Condition Rating:** 1	
	Performance Rating: 1	
Comments	**Standard Useful Life:** 30 years	
	Remaining Life: 26 years	
	Notes: Not yet installed.	
	Improvement:	

Pump Station No. 3

Mechanical Systems

Asset: 3-W-PU-1, Pump 1

Size/Material	Volts/Amps/HP/Speed	Purchase Year
10 hp		2003 (Work Order)

Manufacturer/Model
Smith & Loveless, 4B2

Duty (gpm) / Duty (TDH)
275 gpm, 65 ft

Serial Number
02-5383B-1

Comments

Condition Rating: -
Performance Rating: -
Standard Useful Life: 30 years
Remaining Life: 15 years
Notes:

Improvement:

Asset: 3-C-SR-1-WY, Starter - Pump 1
Subcomponent to: 3-W-PU-1

Size/Material	Volts/Amps/HP/Speed	Purchase Year
10 hp	240V V, 45A A, 10 hp	2015

Manufacturer/Model
Eaton

Serial Number

Comment Field

Condition Rating: 1
Performance Rating: 1
Standard Useful Life: 15 years
Remaining Life: 12 years
Notes:

Improvement:

Asset: 3-W-MO-1-WY, Motor - Pump 1
Subcomponent to: 3-W-PU-1

Size/Material	Volts/Amps/HP/Speed	Purchase Year
10 hp	230 V, 10 hp, 1800 RPM	2003

Manufacturer/Model

Serial Number

Comment Field

Condition Rating: -
Performance Rating: -
Standard Useful Life: 30 years
Remaining Life: 15 years
Notes:

Improvement:

Pump Station No. 3

Mechanical Systems

Asset: 3-W-VA-5, Gate Valve for Isolation - Pump 1
Subcomponent to: 3-W-PU-1

Size/Material	Volts/Amps/HP/Speed	Purchase Year
4 inch		2003 (est)

Manufacturer/Model	
Mueller, 74242	**Condition Rating:** -
Serial Number	**Performance Rating:** -
	Standard Useful Life: 30 years
	Remaining Life: 15 years
Comment Field	**Notes:**
	Improvement:

Pump Station No. 3

Mechanical Systems

Asset: 3-W-PU-2, Pump 2

Size/Material	Volts/Amps/HP/Speed	Purchase Year
10 hp		2003 (Work Order)
Manufacturer/Model	**Duty (gpm) / Duty (TDH)**	
Smith & Loveless, 4B2	275 gpm, 65 ft	
Serial Number	**Condition Rating:** -	
03-0749A-1	**Performance Rating:** -	
Comments	**Standard Useful Life:** 30 years	
	Remaining Life: 15 years	
	Notes: Check valve for Pump 2 failed, and new check valve is different lay length than existing. Pump 2 is out of service until new check valve can be installed.	
	Improvement:	

Asset: 3-C-SR-2-WY, Starter - Pump 2
Subcomponent to: 3-W-PU-2

Size/Material	Volts/Amps/HP/Speed	Purchase Year
10 hp	240V V, 45A A, 10 hp	2015
Manufacturer/Model	**Condition Rating:** 1	
Eaton	**Performance Rating:** 1	
Serial Number	**Standard Useful Life:** 15 years	
	Remaining Life: 12 years	
Comment Field	**Notes:**	
	Improvement:	

Pump Station No. 3

Mechanical Systems

Asset: 3-W-MO-2-WY, Motor - Pump 2
Subcomponent to: 3-W-PU-2

Size/Material	Volts/Amps/HP/Speed	Purchase Year
10 hp	230 V, 10 hp, 1800 RPM	2003

Manufacturer/Model

Serial Number

Comment Field

Condition Rating: -
Performance Rating: -
Standard Useful Life: 30 years
Remaining Life: 15 years
Notes:

Improvement:

Asset: 3-W-VA-6, Gate Valve for Isolation - Pump 2
Subcomponent to: 3-W-PU-2

Size/Material	Volts/Amps/HP/Speed	Purchase Year
4 inch		2003 (est)

Manufacturer/Model
Mueller, 74242

Serial Number

Comment Field

Condition Rating: -
Performance Rating: -
Standard Useful Life: 30 years
Remaining Life: 15 years
Notes:

Improvement:

Asset: 3-W-VA-1, Check Valve

Size/Material	Volts/Amps/HP/Speed	Purchase Year
4 inch		1959

Manufacturer/Model
Mueller, 040A26020602

Duty (gpm) / Duty (TDH)

Serial Number

Comments

Condition Rating: -
Performance Rating: -
Standard Useful Life: 25 years
Remaining Life: 0 years
Notes:

Improvement:

Pump Station No. 3

Mechanical Systems

Asset: 3-W-VA-2, Check Valve

Size/Material	Volts/Amps/HP/Speed	Purchase Year
4 inch		2017
Manufacturer/Model	**Duty (gpm) / Duty (TDH)**	
Mueller, 0400-8001 AB1LW		
Serial Number	**Condition Rating:** -	
50910-07063	**Performance Rating:** -	
Comments	**Standard Useful Life:** 25 years	
Not Yet Installed	**Remaining Life:** 24 years	
	Notes:	
	Improvement:	

Asset: 3-W-VA-3, Gate Valve

Size/Material	Volts/Amps/HP/Speed	Purchase Year
4 inch		2003 (est)
Manufacturer/Model	**Duty (gpm) / Duty (TDH)**	
USA, 1-010-2024		
Serial Number	**Condition Rating:** -	
	Performance Rating: -	
Comments	**Standard Useful Life:** 30 years	
	Remaining Life: 15 years	
	Notes:	
	Improvement:	

Pump Station No. 3

Mechanical Systems

Asset: 3-W-VA-4, Gate Valve

Size/Material	Volts/Amps/HP/Speed	Purchase Year
4 inch		2003 (est)
Manufacturer/Model	**Duty (gpm) / Duty (TDH)**	
USA, 1-010-2024		
Serial Number	**Condition Rating:** -	
	Performance Rating: -	
Comments	**Standard Useful Life:** 30 years	
	Remaining Life: 15 years	
	Notes:	
	Improvement:	

Pump Station No. 3

Electrical and Power Systems

Asset: 3-C-CB-12, Main Breaker

Size			
200 amps			
Manufacturer/Model			
Eaton, ED 65K			
Serial Number			
Volts	**Amps**	**HP**	**Speed**
240V	200A		
Comments			

Condition Rating: 1
Performance Rating: 1
Standard Useful Life: 20 years
Remaining Life: 17 years
Notes:

Improvement:

Purchase Year
2015

Asset: 3-C-PB-1, Panelboard

Size			
18 Ckts			
Manufacturer/Model			
Eaton, PRL1a			
Serial Number			
1C96649G02			
Volts	**Amps**	**HP**	**Speed**
120V			
Comments			

Condition Rating: 1
Performance Rating: 1
Standard Useful Life: 20 years
Remaining Life: 17 years
Notes:

Improvement:

Purchase Year
2015

Asset: 3-C-PP-1, Control Panel

Size			
Manufacturer/Model			
Tesco			
Serial Number			
Volts	**Amps**	**HP**	**Speed**
120/240V	200A		
Comments			
NEMA 3R			

Condition Rating: 1
Performance Rating: 3
Standard Useful Life: 20 years
Remaining Life: 17 years
Notes: PLC programming still requires minor adjustments by system integrator.

Improvement:

Purchase Year
2015

Pump Station No. 3

Electrical and Power Systems

Asset: 3-E-AS-1, Automatic Transfer Switch

Size
100 amps

Manufacturer/Model
CAT, MX150

Serial Number
TSA05807

Volts	Amps	HP	Speed
120/240V	100A		

Comments

Condition Rating: 1
Performance Rating: 1
Standard Useful Life: 20 years
Remaining Life: 17 years
Notes:

Improvement:

Purchase Year
2015

Asset: 3-E-GE-1, Standby Generator - Natural Gas

Size
45 kVA

Manufacturer/Model
Generac, 3345-0

Serial Number
818583

Volts	Amps	HP	Speed
277/480V	54.9A		

Comments

Condition Rating: 3
Performance Rating: 1
Standard Useful Life: 25 years
Remaining Life: 22 years
Notes: Parts difficult to acquire as generator is obsolete; e.g., mechanical governor was replaced with electrical governor. Disconnect switch clearance insufficient to meet NEC. Local natural gas tank not installed.

Improvement: Replace existing standby generator with new. Relocate standby generator disconnect switch to location with proper working clearance per the NEC. Provide local fuel tank.

Purchase Year
2015 (est)

Pump Station No. 3

Instrumentation / Controls

Asset: 3-C-PPC-1, Level Transmitter and Sensor

Size

Manufacturer/Model
Siemens, HydroRanger 200

Serial Number

Volts | **Amps**

Comments

Condition Rating: 1
Performance Rating: 1
Standard Useful Life: 15 years
Remaining Life: 12 years
Notes:

Improvement:

Purchase Year
2015

Asset: 3-C-VE-1, Autodialer

Size

Manufacturer/Model
RACO, Verbatim VSS

Serial Number
V17384

Volts | **Amps**

Comments

Condition Rating: 1
Performance Rating: 1
Standard Useful Life: 20 years
Remaining Life: 17 years
Notes:

Improvement:

Purchase Year
2015

Asset: 3-W-FL-1, Level Float Switches

Size

Manufacturer/Model
Flygt, ENM10

Serial Number

Volts | **Amps**

Comments

Condition Rating: 1
Performance Rating: 3
Standard Useful Life: 15 years
Remaining Life: 12 years
Notes: SAFE-PAK relays or float switches causing false high-high alarm.

Improvement: Replace SAFE-PAK intrinsically safe relay and ensure connection from float switch is secure.

Purchase Year
2015

Pump Station No. 4

Year Originally Constructed	Year of Latest Upgrade
(unknown)	2015
Address	
5060 Camino Alta Mira Drive	
Emergency Generator	**Bypass Equipment**
On-Site Generator	Bypass Quick-Connects
On-Site Storage Capacity (gal)	**Force Main Diameter (inches)**
2,588 gal; 2 hours (ADWF)	8
Facility Description	
-Station serves 107 single-family homes. -The Station underwent a major rehabilitation in 2015.	

Inspection Notes

- Site security and graffiti is an issue, since there is no gate or fences.
- Dry well hatch drains into dry well.
- Sump pump run on float.

Operator Concerns

CVSan staff would like designs to consider ladder width into vaults, and how the hatches open (swing direction).

Recommended Site Improvements

Install more secure ladder extension poles or Davit cranes for safety.

Pump Station No. 4

Condition Rating Index:
1 - Excellent
2 - Slight Visible Degradation
3 - Visible Degradation
4 - Integrity Moderately Compromised
5 - Integrity Severely Compromised

Performance Rating Index:
1 - Functioning as Intended
2 - In Service, High OM Costs
3 - In Service, Function Impaired
4 - In Service, Function Highly Impaired
5 - Not Functioning as Intended

Site / Civil

Asset: 4-M-AW-1-WY, Site Paving

Size / Material
900 sq ft, Concrete

Purchase Year
2014 (Operator)

Comments

Condition Rating: 2
Performance Rating: 1
Standard Useful Life: 50 years
Remaining Life: 46 years
Notes:

Improvement:

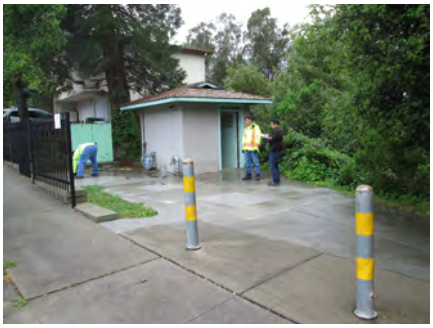

Asset: 4-M-EN-1-WY, Site Fencing

Size / Material
25 LF, Ornamental Iron

Purchase Year
2014 (Operator)

Comments
Partial fencing at the front of site along sidewalk

Condition Rating: 2
Performance Rating: 1
Standard Useful Life: 40 years
Remaining Life: 36 years
Notes:

Improvement:

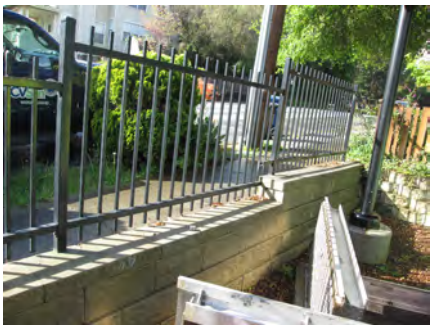

Asset: 4-M-PI-1-WY, Force Main Piping

Size / Material
6 inch

Purchase Year
2005 (est)

Comments

Condition Rating: -
Performance Rating: -
Standard Useful Life: 50 years
Remaining Life: 37 years
Notes:

Improvement:

Pump Station No. 4

Site / Civil

Asset: 4-M-RW-1-WY, Retaining Wall (Front Side of Site)

Size / Material	Condition Rating: 1
30 LF, CMU	Performance Rating: 1
Purchase Year	Standard Useful Life: 50 years
2014 (Operator)	Remaining Life: 46 years
Comments	Notes:
	Improvement:

Pump Station No. 4

Structural / Architectural

Asset: 4-B-VT-1-WY, Bypass Vault

Size / Material	Condition Rating 1	Purchase Year
	Performance Rating: 1	2014 (Operator)
Manufacturer/Model	Standard Useful Life: 40 years	
	Remaining Life: 36 years	
Serial Number	Notes:	
Comments	Improvement:	

Asset: 4-B-HA-1-WY, Bypass Vault Hatch
Subcomponent to: 4-B-VT-1-WY

Size/Material	Volts/Amps/HP/Speed	Purchase Year
6.5 x 4 sq ft		2014 (Operator)
Manufacturer/Model	Condition Rating: 1	
	Performance Rating: 1	
Serial Number	Standard Useful Life: 20 years	
	Remaining Life: 16 years	
Comment Field	Notes:	
	Improvement:	

Asset: 4-B-PI-1, 4-way Tee for Bypass Connection
Subcomponent to: 4-B-VT-1-WY

Size/Material	Volts/Amps/HP/Speed	Purchase Year
		2014 (Operator)
Manufacturer/Model	Condition Rating: 1	
Star, FXDG	Performance Rating: 1	
Serial Number	Standard Useful Life: 30 years	
CHOD1250	Remaining Life: 26 years	
Comment Field	Notes:	
	Improvement:	

Pump Station No. 4

Structural / Architectural

Asset: 4-B-QC-3, Quick Coupling for Bypass
Subcomponent to: 4-B-VT-1-WY

Size/Material	Volts/Amps/HP/Speed	Purchase Year
3 inch		2014 (Operator)

Manufacturer/Model
SCI , 125

Serial Number

Comment Field

Condition Rating: 1
Performance Rating: 1
Standard Useful Life: 20 years
Remaining Life: 16 years
Notes:

Improvement:

Asset: 4-B-VA-3, Gate Valve for Bypass Connection
Subcomponent to: 4-B-VT-1-WY

Size/Material	Volts/Amps/HP/Speed	Purchase Year
6 inch		2014 (Operator)

Manufacturer/Model
Kennedy, KS-FW

Serial Number
057DH4

Comment Field

Condition Rating: 1
Performance Rating: 1
Standard Useful Life: 30 years
Remaining Life: 26 years
Notes:

Improvement:

Asset: 4-B-VA-4, Check Valve for Bypass Connection
Subcomponent to: 4-B-VT-1-WY

Size/Material	Volts/Amps/HP/Speed	Purchase Year
6 inch		2014 (Operator)

Manufacturer/Model
APCO, 106H-1

Serial Number

Comment Field

Condition Rating: 1
Performance Rating: 1
Standard Useful Life: 25 years
Remaining Life: 21 years
Notes:

Improvement:

Pump Station No. 4

Structural / Architectural

Asset: 4-D-GL-1-WY, Dry Well

Size / Material	Condition Rating 2	Purchase Year
Steel	Performance Rating: 1	2005 (est)
Manufacturer/Model	Standard Useful Life: 40 years	
Smith & Loveless	Remaining Life: 27 years	
Serial Number	Notes:	
Comments		
Original Installation	Improvement:	

Asset: 4-D-HA-1-WY, Dry Well Hatch
Subcomponent to: 4-D-GL-1-WY

Size/Material	Volts/Amps/HP/Speed	Purchase Year
3.5 x 3 sq ft, Aluminum		2014 (Operator)
Manufacturer/Model	Condition Rating: 1	
	Performance Rating: 1	
Serial Number	Standard Useful Life: 20 years	
	Remaining Life: 16 years	
Comment Field	Notes:	
	Improvement:	

Asset: 4-M-VT-1-WY, Pig Launching Vault

Size / Material	Condition Rating 1	Purchase Year
	Performance Rating: 1	2014 (Operator)
Manufacturer/Model	Standard Useful Life: 40 years	
	Remaining Life: 36 years	
Serial Number	Notes:	
Comments		
	Improvement:	

Pump Station No. 4

Structural / Architectural

Asset: 4-M-HA-1-WY, Pig Launching Vault Hatch
Subcomponent to: 4-M-VT-1-WY

Size/Material	Volts/Amps/HP/Speed	Purchase Year
4 x 5 sq ft		2014 (Operator)

Manufacturer/Model

Serial Number

Comment Field

Condition Rating: 1
Performance Rating: 1
Standard Useful Life: 20 years
Remaining Life: 16 years
Notes:

Improvement:

Asset: 4-R-EN-1-WY, Structure Enclosing Emergency Generator

Size / Material	Purchase Year
120 sq ft, CMU	1960 (est)

Manufacturer/Model

Serial Number

Comments
Building original to site. Composite tile roof replaced in 2012.

Condition Rating 2
Performance Rating: 1
Standard Useful Life: 50 years
Remaining Life: 0 years
Notes: Wood door may be a security risk.

Improvement:

Asset: 4-W-GL-1-WY, Wet Well

Size / Material	Purchase Year
4 ft, Concrete	2014 (Operator)

Manufacturer/Model

Serial Number

Comments
Top half installed in 2014, bottom half original installation & unknown material.

Condition Rating 1
Performance Rating: 1
Standard Useful Life: 40 years
Remaining Life: 36 years
Notes: Top half was installed in 2014, bottom half is original installation.

Improvement:

Pump Station No. 4

Structural / Architectural

Asset: 4-W-HA-1-WY, Wet Well Hatch
Subcomponent to: 4-W-GL-1-WY

Size/Material	Volts/Amps/HP/Speed	Purchase Year
4 x 3.5 sq ft, Aluminum		2014 (Operator)

Manufacturer/Model

Serial Number

Comment Field

Condition Rating: 1
Performance Rating: 1
Standard Useful Life: 20 years
Remaining Life: 16 years
Notes:

Improvement:

Mechanical Systems

Asset: 4-B-QC-1, Quick Snap-joint Coupling for Pigging

Size/Material	Volts/Amps/HP/Speed	Purchase Year
6 inch		2014 (Operator)
Manufacturer/Model	**Duty (gpm) / Duty (TDH)**	
Victaulic, 78		
Serial Number	**Condition Rating:** 1	
	Performance Rating: 1	
Comments	**Standard Useful Life:** 20 years	
	Remaining Life: 16 years	
	Notes:	
	Improvement:	

Asset: 4-B-QC-2, Quick Snap-joint Coupling for Pigging

Size/Material	Volts/Amps/HP/Speed	Purchase Year
6 inch		2014 (Operator)
Manufacturer/Model	**Duty (gpm) / Duty (TDH)**	
Victaulic, 78		
Serial Number	**Condition Rating:** 1	
	Performance Rating: 1	
Comments	**Standard Useful Life:** 20 years	
	Remaining Life: 16 years	
	Notes:	
	Improvement:	

Pump Station No. 4

Mechanical Systems

Asset: 4-B-QC-4-WY, Quick Coupling for Pigging

Size/Material	Volts/Amps/HP/Speed	Purchase Year
6 inch		2014 (Operator)
Manufacturer/Model	**Duty (gpm) / Duty (TDH)**	
Victaulic		
Serial Number	**Condition Rating:** 1	
	Performance Rating: 1	
Comments	**Standard Useful Life:** 20 years	
	Remaining Life: 16 years	
	Notes:	
	Improvement:	

Asset: 4-B-QC-5-WY, Quick Coupling for Pigging

Size/Material	Volts/Amps/HP/Speed	Purchase Year
6 inch		2014 (Operator)
Manufacturer/Model	**Duty (gpm) / Duty (TDH)**	
Victaulic, 78		
Serial Number	**Condition Rating:** 1	
	Performance Rating: 1	
Comments	**Standard Useful Life:** 20 years	
	Remaining Life: 16 years	
	Notes:	
	Improvement:	

Pump Station No. 4

Mechanical Systems

Asset: 4-B-VA-1, Gate Valve for Pig Launching

Size/Material	Volts/Amps/HP/Speed	Purchase Year
6 inch		2014 (Operator)
Manufacturer/Model	**Duty (gpm) / Duty (TDH)**	
AVK, 45-15032		
Serial Number	**Condition Rating:** 1	
	Performance Rating: 1	
Comments	**Standard Useful Life:** 30 years	
	Remaining Life: 26 years	
	Notes:	
	Improvement:	

Asset: 4-B-VA-2, Gate Valve for Pig Launching

Size/Material	Volts/Amps/HP/Speed	Purchase Year
6 inch		2014 (Operator)
Manufacturer/Model	**Duty (gpm) / Duty (TDH)**	
AVK, 45-15032		
Serial Number	**Condition Rating:** 1	
	Performance Rating: 1	
Comments	**Standard Useful Life:** 30 years	
	Remaining Life: 26 years	
	Notes:	
	Improvement:	

Pump Station No. 4

Mechanical Systems

Asset: 4-W-PU-1, Pump 1

Size/Material	Volts/Amps/HP/Speed	Purchase Year
10 hp		2005 (Work Orders)

Manufacturer/Model
Smith & Loveless, 4B2-050-779 273

Duty (gpm) / Duty (TDH)
273 gpm, 65 ft

Serial Number
050779

Comments

Condition Rating: 2
Performance Rating: 1
Standard Useful Life: 30 years
Remaining Life: 17 years
Notes:

Improvement:

Asset: 4-C-SR-1-WY, Starter - Pump 1
Subcomponent to: 4-W-PU-1

Size/Material	Volts/Amps/HP/Speed	Purchase Year
10 hp	240V V, 45A A, 10 hp	2015

Manufacturer/Model
Eaton

Serial Number

Comment Field

Condition Rating: 1
Performance Rating: 1
Standard Useful Life: 15 years
Remaining Life: 12 years
Notes:

Improvement:

Asset: 4-W-MO-1-WY, Motor - Pump 1
Subcomponent to: 4-W-PU-1

Size/Material	Volts/Amps/HP/Speed	Purchase Year
10 hp	230/460 V, 27.6/13.8 A, 10 hp, 1800 RPM	2005 (Operator)

Manufacturer/Model
Smith & Loveless, 0100C-1HAN-0016

Serial Number
045628B-1

Comment Field

Condition Rating: 2
Performance Rating: 1
Standard Useful Life: 30 years
Remaining Life: 17 years
Notes:

Improvement:

Pump Station No. 4

Mechanical Systems

Asset: 4-W-VA-1, Check Valve - Pump 1
Subcomponent to: 4-W-PU-1

Size/Material	Volts/Amps/HP/Speed	Purchase Year
4 inch		2005 (est)

Manufacturer/Model
Mueller, 040A26020602

Serial Number

Comment Field

Condition Rating: 2
Performance Rating: 1
Standard Useful Life: 25 years
Remaining Life: 12 years
Notes:

Improvement:

Asset: 4-W-VA-3, Gate Valve for Isolation - Pump 1 Discharge
Subcomponent to: 4-W-PU-1

Size/Material	Volts/Amps/HP/Speed	Purchase Year
4 inch		2005 (est)

Manufacturer/Model
Mueller, 74242

Serial Number

Comment Field

Condition Rating: 2
Performance Rating: 1
Standard Useful Life: 30 years
Remaining Life: 17 years
Notes:

Improvement:

Asset: 4-W-VA-5-WY, Gate Valve for Isolation - Pump 1 Suction
Subcomponent to: 4-W-PU-1

Size/Material	Volts/Amps/HP/Speed	Purchase Year
4 inch		2005 (est)

Manufacturer/Model
Mueller, 74242

Serial Number

Comment Field

Condition Rating: 2
Performance Rating: 1
Standard Useful Life: 30 years
Remaining Life: 17 years
Notes:

Improvement:

Pump Station No. 4

Mechanical Systems

Asset: 4-W-PU-2, Pump 2

Size/Material	Volts/Amps/HP/Speed	Purchase Year
10 hp		2005 (Operator)

Manufacturer/Model
Smith & Loveless, 4B2-050-779 273

Duty (gpm) / Duty (TDH)
273 gpm, 65 ft

Serial Number
050780

Condition Rating: 2
Performance Rating: 1
Standard Useful Life: 30 years
Remaining Life: 17 years
Notes:

Comments

Improvement:

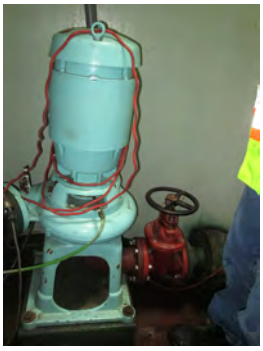

Asset: 4-C-SR-2-WY, Starter - Pump 2
Subcomponent to: 4-W-PU-2

Size/Material	Volts/Amps/HP/Speed	Purchase Year
10 hp	240V V, 45A A, 10 hp	2015

Manufacturer/Model
Eaton

Serial Number

Comment Field

Condition Rating: 1
Performance Rating: 1
Standard Useful Life: 15 years
Remaining Life: 12 years
Notes:

Improvement:

Asset: 4-W-MO-2-WY, Motor - Pump 2
Subcomponent to: 4-W-PU-2

Size/Material	Volts/Amps/HP/Speed	Purchase Year
10 hp	230/460 V, 27.6/13.8 A, 10 hp, 1800 RPM	2005 (Operator)

Manufacturer/Model
Smith & Loveless, 0100C-1HAN-0016

Serial Number
045628C-1

Comment Field

Condition Rating: 2
Performance Rating: 1
Standard Useful Life: 30 years
Remaining Life: 17 years
Notes:

Improvement:

Pump Station No. 4

Mechanical Systems

Asset: 4-W-VA-2, Check Valve - Pump 2
Subcomponent to: 4-W-PU-2

Size/Material	Volts/Amps/HP/Speed	Purchase Year
4 inch		2005 (est)

Manufacturer/Model
Mueller, 040A26020602

Serial Number

Comment Field

Condition Rating: 2
Performance Rating: 1
Standard Useful Life: 25 years
Remaining Life: 12 years
Notes:

Improvement:

Asset: 4-W-VA-4, Gate Valve for Isolation - Pump 2 Discharge
Subcomponent to: 4-W-PU-2

Size/Material	Volts/Amps/HP/Speed	Purchase Year
4 inch		2005 (est)

Manufacturer/Model
Mueller, 74242

Serial Number

Comment Field

Condition Rating: 2
Performance Rating: 1
Standard Useful Life: 30 years
Remaining Life: 17 years
Notes:

Improvement:

Pump Station No. 4

Mechanical Systems

Asset: 4-W-VA-6-WY, Gate Valve for Isolation - Pump 2 Suction
Subcomponent to: 4-W-PU-2

Size/Material	Volts/Amps/HP/Speed	Purchase Year
4 inch		2005 (est)

Manufacturer/Model
Mueller, 74242

Serial Number

Comment Field

Condition Rating: 2
Performance Rating: 1
Standard Useful Life: 30 years
Remaining Life: 17 years
Notes:

Improvement:

Pump Station No. 4

Electrical and Power Systems

Asset: 4-C-CB-12, Main Breaker

Size			
200 amps			
Manufacturer/Model			
Eaton, ED 65K			
Serial Number			
Volts	**Amps**	**HP**	**Speed**
240V	200A		
Comments			

Condition Rating: 1
Performance Rating: 1
Standard Useful Life: 20 years
Remaining Life: 17 years
Notes:

Improvement:

Purchase Year
2015

Asset: 4-C-PB-1, Panelboard

Size			
18 Ckts			
Manufacturer/Model			
Eaton, PRL1a			
Serial Number			
1C96649G02			
Volts	**Amps**	**HP**	**Speed**
120V			
Comments			

Condition Rating: 1
Performance Rating: 1
Standard Useful Life: 20 years
Remaining Life: 17 years
Notes:

Improvement:

Purchase Year
2015

Asset: 4-C-PP-1, Control Panel

Size			
Manufacturer/Model			
Tesco			
Serial Number			
Volts	**Amps**	**HP**	**Speed**
120/240V	200A		
Comments			
NEMA 3R			

Condition Rating: 1
Performance Rating: 3
Standard Useful Life: 20 years
Remaining Life: 17 years
Notes: PLC programming still requires minor adjustments by system integrator.

Improvement:

Purchase Year
2015

Pump Station No. 4

Electrical and Power Systems

Asset: 4-E-AS-1, Automatic Transfer Switch

Size			
100 amps			
Manufacturer/Model			
CAT, MX150			
Serial Number			
TSA05807			
Volts	**Amps**	**HP**	**Speed**
120/240V	100A		
Comments			

Condition Rating: 1
Performance Rating: 1
Standard Useful Life: 20 years
Remaining Life: 17 years
Notes:

Improvement:

Purchase Year
2015

Asset: 4-E-GE-1, Standby Generator - Natural Gas

Size			
56 kVA			
Manufacturer/Model			
ONAN, 45EM			
Serial Number			
372432639			
Volts	**Amps**	**HP**	**Speed**
240V	135A		
Comments			

Condition Rating: 3
Performance Rating: 1
Standard Useful Life: 25 years
Remaining Life: 12 years
Notes: Local natural gas tank not installed. Parts difficult to acquire as generator is obsolete; e.g., pulley style governor is difficult to replace.
Improvement: Replace existing standby generator with new, having same rating as existing. Provide local natural gas tank for standby generator, as required by the NEC. (NEC Article 700.12(B)(3))

Purchase Year
2005 (est)

Pump Station No. 4

Instrumentation / Controls

Asset: 4-C-PPC-1, Level Transmitter and Sensor

Size	
Manufacturer/Model	
Siemens, HydroRanger 200	
Serial Number	
Volts	**Amps**
Comments	

Condition Rating: 1
Performance Rating: 1
Standard Useful Life: 15 years
Remaining Life: 12 years
Notes:

Improvement:

Purchase Year
2015

Asset: 4-C-VE-1, Autodialer

Size	
Manufacturer/Model	
RACO, Verbatim VSS	
Serial Number	
V17384	
Volts	**Amps**
Comments	

Condition Rating: 1
Performance Rating: 1
Standard Useful Life: 20 years
Remaining Life: 17 years
Notes:

Improvement:

Purchase Year
2015

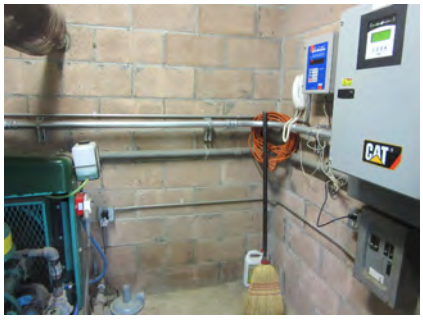

Asset: 4-W-FL-1, Level Float Switches

Size	
Manufacturer/Model	
Flygt, ENM10	
Serial Number	
Volts	**Amps**
Comments	

Condition Rating: 1
Performance Rating: 3
Standard Useful Life: 15 years
Remaining Life: 12 years
Notes: SAFE-PAK relays or float switches causing false high-high alarm.

Improvement: Replace SAFE-PAK intrinsically safe relay and ensure connection from float switch is secure.

Purchase Year
2015

Pump Station No. 5

Year Originally Constructed	Year of Latest Upgrade
1966	2013
Address	
4708 Mira Vista Drive	
Emergency Generator	**Bypass Equipment**
Hookups for Portable Generator	Bypass Quick-Connects
On-Site Storage Capacity (gal)	**Force Main Diameter (inches)**
4,165 gal; 13 hours (ADWF)	4
Facility Description	
Station serves 25 single-family homes	

Inspection Notes

Operator Concerns

- Generator plug cover leaks water in lid after rain.

Recommended Site Improvements

Pump Station No. 5

Condition Rating Index:
1 - Excellent
2 - Slight Visible Degradation
3 - Visible Degradation
4 - Integrity Moderately Compromised
5 - Integrity Severely Compromised

Performance Rating Index:
1 - Functioning as Intended
2 - In Service, High OM Costs
3 - In Service, Function Impaired
4 - In Service, Function Highly Impaired
5 - Not Functioning as Intended

Site / Civil

Asset: 5-M-AW-1-WY, Site Paving

Size / Material	Condition Rating: 2
400 sq ft, Concrete	Performance Rating: 1
Purchase Year	Standard Useful Life: 50 years
1960 (Operator)	Remaining Life: 0 years
Comments	Notes:
	Improvement:

Asset: 5-M-EN-1-WY, Site Fencing

Size / Material	Condition Rating: 1
30 LF, Wood	Performance Rating: 1
Purchase Year	Standard Useful Life: 20 years
1960 (Operator)	Remaining Life: 0 years
Comments	Notes:
	Improvement:

Asset: 5-M-PI-1-WY, Force Main Piping

Size / Material	Condition Rating: -
4 inch	Performance Rating: -
Purchase Year	Standard Useful Life: 50 years
1960 (Operator)	Remaining Life: 0 years
Comments	Notes:
	Improvement:

Pump Station No. 5

Site / Civil

Asset: 5-B-VA-5, Plug Valve for Force Main Drain
Subcomponent to: 5-M-PI-1-WY

Size/Material	Volts/Amps/HP/Speed	Purchase Year
4 inch		2013 (Operator)

Manufacturer/Model
Val-Matic, CAM-CENTRIC 580 RNXP

Serial Number

Comment Field

Condition Rating: 2
Performance Rating: 1
Standard Useful Life: 30 years
Remaining Life: 25 years
Notes:

Improvement:

Asset: 5-M-RW-1-WY, Retainig Wall (North and East of the Site)

Size / Material
40 LF, CMU

Purchase Year
1960 (Operator)

Comments

Condition Rating: 2
Performance Rating: 1
Standard Useful Life: 50 years
Remaining Life: 0 years
Notes:

Improvement:

Pump Station No. 5

Structural / Architectural

Asset: 5-B-VT-1-WY, Bypass Vault

Size / Material	Condition Rating 1	Purchase Year
5 x 4 sq ft, Concrete	**Performance Rating:** 1	2013 (Operator)
Manufacturer/Model	**Standard Useful Life:** 40 years	
	Remaining Life: 35 years	
Serial Number	**Notes:**	
Comments	**Improvement:**	

Asset: 5-B-HA-1-WY, Bypass Vault Hatch
Subcomponent to: 5-B-VT-1-WY

Size/Material	Volts/Amps/HP/Speed	Purchase Year
5 x 4 sq ft, Aluminum		2013 (Operator)
Manufacturer/Model	**Condition Rating:** 1	
	Performance Rating: 1	
Serial Number	**Standard Useful Life:** 20 years	
	Remaining Life: 15 years	
Comment Field	**Notes:**	
	Improvement:	

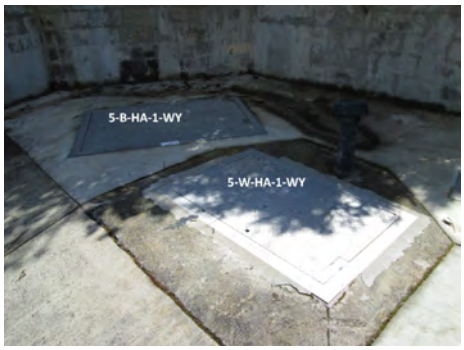

Pump Station No. 5

Structural / Architectural

Asset: 5-B-PI-1-WY, Bypass Piping
Subcomponent to: 5-B-VT-1-WY

Size/Material	Volts/Amps/HP/Speed	Purchase Year
4 inch		2013 (Operator)

Manufacturer/Model

Serial Number

Comment Field

Condition Rating: 2
Performance Rating: 1
Standard Useful Life: 50 years
Remaining Life: 45 years
Notes: One piece very corroded.

Improvement: Replace corroded section and recoat.

Asset: 5-B-VA-4, Check Valve for Bypass
Subcomponent to: 5-B-VT-1-WY

Size/Material	Volts/Amps/HP/Speed	Purchase Year
4 inch		2013 (Operator)

Manufacturer/Model
Val-Matic, 504 A

Serial Number

Comment Field

Condition Rating: 2
Performance Rating: 1
Standard Useful Life: 25 years
Remaining Life: 20 years
Notes:

Improvement:

Pump Station No. 5

Structural / Architectural

Asset: 5-B-VA-6, Plug Valve for Bypass
Subcomponent to: 5-B-VT-1-WY

Size/Material	Volts/Amps/HP/Speed	Purchase Year
4 inch		2013 (Operator)

Manufacturer/Model
Val-Matic, CAM-CENTRIC 580 RNXP

Serial Number

Comment Field

Condition Rating: 2
Performance Rating: 1
Standard Useful Life: 30 years
Remaining Life: 25 years
Notes:

Improvement:

Asset: 5-M-VT-1-WY, Valve Vault

Size / Material
7 x 4 sq ft, Concrete

Manufacturer/Model

Serial Number

Comments

Condition Rating 1
Performance Rating: 1
Standard Useful Life: 40 years
Remaining Life: 35 years
Notes:

Improvement:

Purchase Year
2013 (Operator)

Asset: 5-M-HA-1-WY, Valve Vault Hatch
Subcomponent to: 5-M-VT-1-WY

Size/Material	Volts/Amps/HP/Speed	Purchase Year
7 x 4 sq ft, Aluminum		2013 (Operator)

Manufacturer/Model

Serial Number

Comment Field

Condition Rating: 1
Performance Rating: 1
Standard Useful Life: 20 years
Remaining Life: 15 years
Notes:

Improvement:

Pump Station No. 5

Structural / Architectural

Asset: 5-W-GL-1-WY, Wet Well

Size / Material	Condition Rating 2	Purchase Year
Concrete	**Performance Rating:** 1	1960 (Operator)
Manufacturer/Model	**Standard Useful Life:** 40 years	
	Remaining Life: 0 years	
Serial Number	**Notes:** Minor corrosion	
Comments	**Improvement:**	

Asset: 5-W-HA-1-WY, Wet Well Hatch
Subcomponent to: 5-W-GL-1-WY

Size/Material	Volts/Amps/HP/Speed	Purchase Year
4 x 2.5 sq ft, Aluminum		2013 (Operator)
Manufacturer/Model	**Condition Rating:** 1	
	Performance Rating: 1	
Serial Number	**Standard Useful Life:** 20 years	
	Remaining Life: 15 years	
Comment Field	**Notes:** Has safety grates	
	Improvement:	

Pump Station No. 5

Mechanical Systems

Asset: 5-B-VA-1, ARV

Size/Material	Volts/Amps/HP/Speed	Purchase Year
2 inch		2013 (Operator)
Manufacturer/Model	**Duty (gpm) / Duty (TDH)**	
Val-Matic, 49ASY		
Serial Number	**Condition Rating:** 1	
	Performance Rating: 1	
Comments	**Standard Useful Life:** 30 years	
	Remaining Life: 25 years	
	Notes:	
	Improvement:	

Asset: 5-C-FN-1, Fan

Size/Material	Volts/Amps/HP/Speed	Purchase Year
		2013 (Operator)
Manufacturer/Model	**Duty (gpm) / Duty (TDH)**	
P.Fannenberg, Pr66000		
Serial Number	**Condition Rating:** 1	
	Performance Rating: 1	
Comments	**Standard Useful Life:** 15 years	
	Remaining Life: 10 years	
	Notes:	
	Improvement:	

Pump Station No. 5

Mechanical Systems

Asset: 5-W-PU-1, Submersible Pump 1

Size/Material	Volts/Amps/HP/Speed	Purchase Year
10 hp		2013 (Operator)

Manufacturer/Model
Flygt, CP3127X-462-090-8471008

Duty (gpm) / Duty (TDH)
75 gpm, 72 ft

Serial Number
680243

Comments

Condition Rating: 2
Performance Rating: 1
Standard Useful Life: 20 years
Remaining Life: 15 years
Notes:

Improvement:

Asset: 5-B-QC-1, Coupling - Pump 1
Subcomponent to: 5-W-PU-1

Size/Material	Volts/Amps/HP/Speed	Purchase Year
4 inch		2013 (Operator)

Manufacturer/Model

Serial Number

Comment Field

Condition Rating: 1
Performance Rating: 1
Standard Useful Life: 20 years
Remaining Life: 15 years
Notes:

Improvement:

Asset: 5-B-VA-3, Check Valve for Pump 1
Subcomponent to: 5-W-PU-1

Size/Material	Volts/Amps/HP/Speed	Purchase Year
4 inch		2013 (Operator)

Manufacturer/Model
Val-Matic, 504 A

Serial Number

Comment Field

Condition Rating: 1
Performance Rating: 1
Standard Useful Life: 25 years
Remaining Life: 20 years
Notes:

Improvement:

Pump Station No. 5

Mechanical Systems

Asset: 5-C-VF-1, VFD - Pump 1
Subcomponent to: 5-W-PU-1

Size/Material	Volts/Amps/HP/Speed	Purchase Year
10 hp	240V V, 10 hp	2013

Manufacturer/Model
ABB

Serial Number

Comment Field
1 to 3-phase convertor

Condition Rating: 1
Performance Rating: 1
Standard Useful Life: 15 years
Remaining Life: 10 years
Notes:

Improvement:

Asset: 5-W-MO-1-WY, Motor - Pump 1
Subcomponent to: 5-W-PU-1

Size/Material	Volts/Amps/HP/Speed	Purchase Year
10 hp	460/230 V, 13/25 A, 10 hp, 1735 RPM	2013 (Operator)

Manufacturer/Model
3127.090-1178

Serial Number
3127.090-0680243

Comment Field

Condition Rating: 2
Performance Rating: 1
Standard Useful Life: 30 years
Remaining Life: 25 years
Notes: Wires for motor are poorly connected. Not code compliant.
Improvement: Replace wiring.

Asset: 5-W-PI-1-WY, Discharge Piping - Pump 1
Subcomponent to: 5-W-PU-1

Size/Material	Volts/Amps/HP/Speed	Purchase Year
4 inch		2013 (Operator)

Manufacturer/Model

Serial Number

Comment Field

Condition Rating: 3
Performance Rating: 1
Standard Useful Life: 50 years
Remaining Life: 45 years
Notes: Corroded spool pieces.

Improvement:

Pump Station No. 5

Mechanical Systems

Asset: 5-W-PU-2, Submersible Pump 2

Size/Material	Volts/Amps/HP/Speed	Purchase Year
10 hp		2013 (Operator)

Manufacturer/Model
Flygt, CP3127X-462-090-8471008

Duty (gpm) / Duty (TDH)
75 gpm, 72 ft

Serial Number
570141

Comments

Condition Rating: 2
Performance Rating: 1
Standard Useful Life: 20 years
Remaining Life: 15 years
Notes:

Improvement:

Asset: 5-B-QC-2, Coupling - Pump 2
Subcomponent to: 5-W-PU-2

Size/Material	Volts/Amps/HP/Speed	Purchase Year
4 inch		2013 (Operator)

Manufacturer/Model

Serial Number

Comment Field

Condition Rating: 1
Performance Rating: 1
Standard Useful Life: 20 years
Remaining Life: 15 years
Notes:

Improvement:

Asset: 5-B-VA-2, Check Valve for Pump 2
Subcomponent to: 5-W-PU-2

Size/Material	Volts/Amps/HP/Speed	Purchase Year
4 inch		2013 (Operator)

Manufacturer/Model
Val-Matic, 504 A

Serial Number

Comment Field

Condition Rating: 1
Performance Rating: 1
Standard Useful Life: 25 years
Remaining Life: 20 years
Notes:

Improvement:

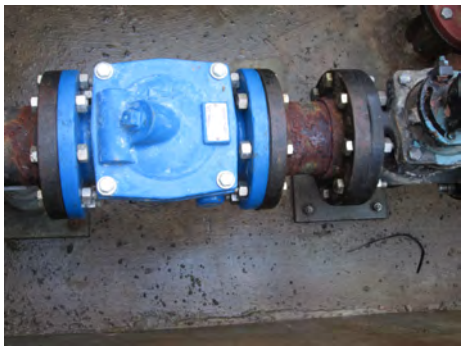

Pump Station No. 5

Mechanical Systems

Asset: 5-C-VF-2, VFD - Pump 2
Subcomponent to: 5-W-PU-2

Size/Material	Volts/Amps/HP/Speed	Purchase Year
10 hp	240V V, 10 hp	2013

Manufacturer/Model
ABB

Serial Number

Comment Field
1 to 3-phase convertor

Condition Rating: 1
Performance Rating: 1
Standard Useful Life: 15 years
Remaining Life: 10 years
Notes:

Improvement:

Asset: 5-W-MO-2-WY, Motor - Pump 2
Subcomponent to: 5-W-PU-2

Size/Material	Volts/Amps/HP/Speed	Purchase Year
10 hp	460/230 V, 13/25 A, 10 hp, 1735 RPM	2013 (Operator)

Manufacturer/Model
3127.090-9096

Serial Number
3127.090-0570141

Comment Field

Condition Rating: 2
Performance Rating: 1
Standard Useful Life: 30 years
Remaining Life: 25 years
Notes:

Improvement:

Asset: 5-W-PI-2-WY, Discharge Piping - Pump 2
Subcomponent to: 5-W-PU-2

Size/Material	Volts/Amps/HP/Speed	Purchase Year
4 inch		2013 (Operator)

Manufacturer/Model

Serial Number

Comment Field

Condition Rating: 3
Performance Rating: 1
Standard Useful Life: 50 years
Remaining Life: 45 years
Notes: Corroded spool pieces.

Improvement:

Pump Station No. 5

Electrical and Power Systems

Asset: 5-C-CB-5, Main Breaker

Size			
250 amps			
Manufacturer/Model			
Eaton, J250E			
Serial Number			
Volts	**Amps**	**HP**	**Speed**
240V	250A		
Comments			

Condition Rating: 1
Performance Rating: 1
Standard Useful Life: 20 years
Remaining Life: 15 years
Notes:

Improvement:

Purchase Year
2013

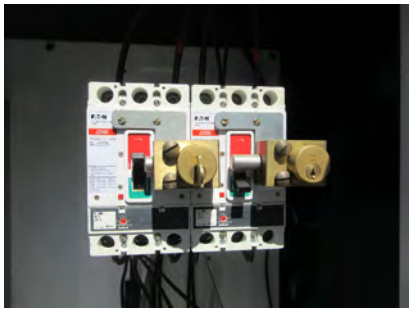

Asset: 5-C-PB-1, Panelboard

Size			
Manufacturer/Model			
Siemens, G1224L1125			
Serial Number			
Volts	**Amps**	**HP**	**Speed**
120/240V			
Comments			

Condition Rating: 1
Performance Rating: 1
Standard Useful Life: 20 years
Remaining Life: 15 years
Notes:

Improvement:

Purchase Year
2013

Asset: 5-C-PP-1, Control Panel

Size			
Manufacturer/Model			
Serial Number			
Volts	**Amps**	**HP**	**Speed**
240V			
Comments			

Condition Rating: 1
Performance Rating: 1
Standard Useful Life: 20 years
Remaining Life: 15 years
Notes:

Improvement:

Purchase Year
2013

Pump Station No. 5

Electrical and Power Systems

Asset: 5-E-REC-1, Generator Receptacle

Size

Manufacturer/Model

Serial Number

Volts	Amps	HP	Speed
240V	250A		

Comments

Condition Rating: 1
Performance Rating: 3
Standard Useful Life: 20 years
Remaining Life: 15 years
Notes: Generator circuit breaker in control panel trips during testing of the receptacle. Receptacle fills with water.
Improvement: Replace portable generator receptacle with new weatherproof receptacle; cover shall ensure weatherproof rating while in use. Replace wiring between receptacle and circuit breaker in control panel with new.

Purchase Year

2013 (Operator)

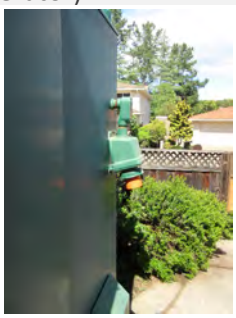

Pump Station No. 5

Instrumentation / Controls

Asset: 5-C-LE-1, Level Transmitter and Sensor

Size	
Manufacturer/Model	
Siemens, HydroRanger 200	
Serial Number	
Volts	**Amps**
Comments	

Condition Rating: 1
Performance Rating: 1
Standard Useful Life: 15 years
Remaining Life: 10 years
Notes:

Improvement:

Purchase Year
2013

Asset: 5-C-VE-1, Autodialer

Size	
Manufacturer/Model	
RACO, Verbatim VSS	
Serial Number	
V19849	
Volts	**Amps**
Comments	

Condition Rating: 1
Performance Rating: 1
Standard Useful Life: 20 years
Remaining Life: 15 years
Notes:

Improvement:

Purchase Year
2013

Asset: 5-W-FL-1, Level Float Switches

Size	
Manufacturer/Model	
Serial Number	
Volts	**Amps**
Comments	

Condition Rating: 1
Performance Rating: 3
Standard Useful Life: 15 years
Remaining Life: 10 years
Notes: SAFE-PAK relays or float switches causing false high-high alarm.

Improvement: Replace SAFE-PAK intrinsically safe relay and ensure connection from float switch is secure.

Purchase Year
2013

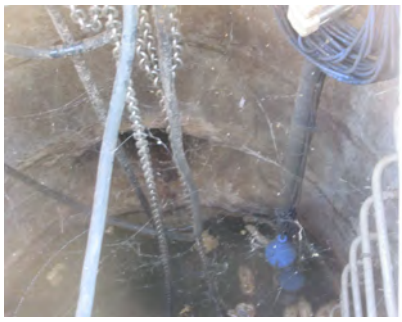

Pump Station No. 7

Year Originally Constructed	Year of Latest Upgrade
1989	2004
Address	
6100 Villareal Drive	
Emergency Generator	**Bypass Equipment**
On-Site Generator	No Bypass Equipment
On-Site Storage Capacity (gal)	**Force Main Diameter (inches)**
27,841 gal; 9 hours (ADWF)	8
Facility Description	

Inspection Notes

Bubbler gets surrounded by solids and sends faulty signals. Clearing solids out resolves the issue. Forcemain discharge causes odor complaints.

Operator Concerns

- Site does not have bypass pumping quick-connects.
- Autodialer has to be manually reset.
- Generator can only run one pump at a time.

Recommended Site Improvements

- Add bypass/pigging connection
- Add automatic reset of autodialer (like PS 8 & 9).
- Add safety grates, even on shallow vaults to protect worker safety.
-Re-route 1" ARV drainline to wet well (vs. parallel to FM)

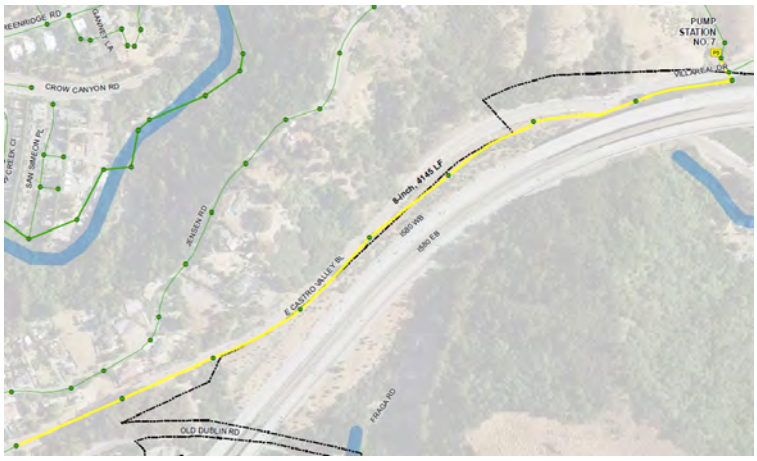

Pump Station No. 7

Condition Rating Index:
1 - Excellent
2 - Slight Visible Degradation
3 - Visible Degradation
4 - Integrity Moderately Compromised
5 - Integrity Severely Compromised

Performance Rating Index:
1 - Functioning as Intended
2 - In Service, High OM Costs
3 - In Service, Function Impaired
4 - In Service, Function Highly Impaired
5 - Not Functioning as Intended

Site / Civil

Asset: 7-M-AW-1-WY, Site Paving

Size / Material	Condition Rating: 2
2,100 sq ft, Asphalt	Performance Rating: 1
Purchase Year	Standard Useful Life: 50 years
1989 (Operator)	Remaining Life: 21 years
Comments	Notes:
	Improvement:

Asset: 7-M-EN-1-WY, Site Fencing

Size / Material	Condition Rating: 2
350 LF, Chain Link	Performance Rating: 1
Purchase Year	Standard Useful Life: 40 years
1989 (est)	Remaining Life: 11 years
Comments	Notes: Slight rust occasionally
	Improvement:

Asset: 7-M-SG-1-WY, Swing Gate
Subcomponent to: 7-M-EN-1-WY

Size/Material	Volts/Amps/HP/Speed	Purchase Year
Chain Link		1989 (Operator)

Manufacturer/Model	Condition Rating: 2
	Performance Rating: 1
Serial Number	Standard Useful Life: 40 years
	Remaining Life: 11 years
Comment Field	Notes:
	Improvement:

Pump Station No. 7

Site / Civil

Asset: 7-M-MR-1-WY, Monorail to Lift Pumps

Size / Material	Condition Rating: 2
	Performance Rating: 1
Purchase Year	Standard Useful Life: 20 years
1989 (est)	Remaining Life: 0 years
Comments	Notes: Monorail has not been used in 10+ years. CVSan staff are unsure if it is safe and would like to replace with a different system, such as a davit or a truck crane.
	Improvement: Replace with truck crane - if CVSan does not have one. $10K

Asset: 7-M-PI-1-WY, Force Main Piping

Size / Material	Condition Rating: -
8 inch	Performance Rating: -
Purchase Year	Standard Useful Life: 50 years
1989 (est)	Remaining Life: 21 years
Comments	Notes:
	Improvement:

Pump Station No. 7

Site / Civil

Asset: 7-B-VA-6-WY, Force Main Isolation Valve
Subcomponent to: 7-M-PI-1-WY

Size/Material	Volts/Amps/HP/Speed	Purchase Year
8 inch		1989 (Operator)

Manufacturer/Model

Serial Number

Comment Field

Condition Rating: 2
Performance Rating: 1
Standard Useful Life: 30 years
Remaining Life: 1 years
Notes: Corroded square nut

Improvement: Replace when installing quick connect

Asset: 7-S-TK-1-WY, Emergency Storage Tank

Size / Material
23,000 gal, Concrete

Purchase Year
2004 (Operator)

Comments

Condition Rating: 1
Performance Rating: 1
Standard Useful Life: 30 years
Remaining Life: 16 years
Notes:

Improvement:

Pump Station No. 7

Structural / Architectural

Asset: 7-M-VT-1-WY, Valve Vault

Size / Material	Condition Rating 2	Purchase Year
4 x 6 sq ft, Concrete	**Performance Rating:** 1	1989 (Operator)
Manufacturer/Model	**Standard Useful Life:** 40 years	
	Remaining Life: 11 years	
Serial Number	**Notes:**	
Comments	**Improvement:**	

Asset: 7-B-PS-1, Pipe Supports
Subcomponent to: 7-M-VT-1-WY

Size/Material	Volts/Amps/HP/Speed	Purchase Year
Stainless Steel		2004 (Operator)
Manufacturer/Model	**Condition Rating:** 1	
	Performance Rating: 1	
Serial Number	**Standard Useful Life:** 20 years	
	Remaining Life: 6 years	
Comment Field	**Notes:**	
	Improvement:	

Asset: 7-M-HA-1-WY, Valve Vault Hatch
Subcomponent to: 7-M-VT-1-WY

Size/Material	Volts/Amps/HP/Speed	Purchase Year
4 x 6 sq ft, Aluminum		1989 (Operator)
Manufacturer/Model	**Condition Rating:** 2	
	Performance Rating: 1	
Serial Number	**Standard Useful Life:** 20 years	
	Remaining Life: 0 years	
Comment Field	**Notes:**	
	Improvement: Replace with Bilco aluminum spring-assisted hatch with safety grates.	

Pump Station No. 7

Structural / Architectural

Asset: 7-R-EN-1-WY, Structure Enclosing Electrical Cabinet & Generator

Size / Material
660 sq ft, CMU

Manufacturer/Model

Serial Number

Comments
Roof material is shake.

Condition Rating 2
Performance Rating: 1
Standard Useful Life: 50 years
Remaining Life: 21 years
Notes:

Improvement:

Purchase Year
1989 (Operator)

Asset: 7-W-GL-1-WY, Wet Well

Size / Material
6 ft

Manufacturer/Model

Serial Number

Comments
Originally installed in 1989, but major rehab in 2004

Condition Rating 3
Performance Rating: 1
Standard Useful Life: 40 years
Remaining Life: 26 years
Notes: Coating spalling/failing.

Improvement: Recoat wet well to extend life.

Purchase Year
2004 (Operator)

Pump Station No. 7

Structural / Architectural

Asset: 7-W-HA-1-WY, Wet Well Hatch
Subcomponent to: 7-W-GL-1-WY

Size/Material	Volts/Amps/HP/Speed	Purchase Year
48 x 30 sq inch, Aluminum		1989 (Operator)

Manufacturer/Model

Serial Number

Comment Field

Condition Rating: 2
Performance Rating: 1
Standard Useful Life: 20 years
Remaining Life: 0 years
Notes:

Improvement: Replace with Bilco aluminum spring-assisted hatch with safety grates.

Pump Station No. 7

Mechanical Systems

Asset: 7-B-CP-1, Bubbler System Compressor

Size/Material	Volts/Amps/HP/Speed	Purchase Year
		1989 (est)

Manufacturer/Model	Duty (gpm) / Duty (TDH)
Rosemount, D2A12B051B1	

Serial Number

3252

Comments

Condition Rating: -
Performance Rating: -
Standard Useful Life: 20 years
Remaining Life: 0 years
Notes: Not inspected. Staff would like back-up level sensor.

Improvement: Replace with ultrasonic level sensor and connect to future SCADA.

Asset: 7-B-CP-2, Purge Compressor

Size/Material	Volts/Amps/HP/Speed	Purchase Year
		1989 (est)

Manufacturer/Model	Duty (gpm) / Duty (TDH)
Speedaire, 2Z928A	

Serial Number

Comments

Condition Rating: -
Performance Rating: -
Standard Useful Life: 20 years
Remaining Life: 0 years
Notes: Not inspected

Improvement:

Pump Station No. 7

Mechanical Systems

Asset: 7-B-CP-3, Purge Compressor

Size/Material	Volts/Amps/HP/Speed	Purchase Year
		1989 (est)
Manufacturer/Model	**Duty (gpm) / Duty (TDH)**	
Speedaire, 2Z928A		
Serial Number	**Condition Rating:** -	
	Performance Rating: -	
Comments	**Standard Useful Life:** 20 years	
	Remaining Life: 0 years	
	Notes: Not inspected	
	Improvement:	

Asset: 7-B-VA-4, Combination Valve for Force Main

Size/Material	Volts/Amps/HP/Speed	Purchase Year
1 inch		2012 (Operator)
Manufacturer/Model	**Duty (gpm) / Duty (TDH)**	
APCO, Valve & Primer		
Serial Number	**Condition Rating:** 3	
443	**Performance Rating:** NA	
Comments	**Standard Useful Life:** 30 years	
	Remaining Life: 24 years	
	Notes: Odd installation with 1-inch piping that runs the length of the forcemain.	
	Improvement: Replace air valve and re-pipe drain line to wet well if possible.	

Pump Station No. 7

Mechanical Systems

Asset: 7-W-PU-1, Submersible Pump 1

Size/Material	Volts/Amps/HP/Speed	Purchase Year
10 hp		2010 (Operator)

Manufacturer/Model
Flygt, CP3127-483

Duty (gpm) / Duty (TDH)
300 gpm, 57 ft

Serial Number
3127095-1070015

Comments

Condition Rating: 2
Performance Rating: 1
Standard Useful Life: 20 years
Remaining Life: 12 years
Notes:
Improvement:

Asset: 7-B-VA-1, Check Valve in Valve Vault - Pump 1
Subcomponent to: 7-W-PU-1

Size/Material	Volts/Amps/HP/Speed	Purchase Year
4 inch		2004 (Operator)

Manufacturer/Model
Val-Matic, 504 A

Serial Number

Comment Field

Condition Rating: 2
Performance Rating: 1
Standard Useful Life: 25 years
Remaining Life: 11 years
Notes:
Improvement:

Asset: 7-B-VA-3, Knife Gate Valve for Isolation - Pump 1
Subcomponent to: 7-W-PU-1

Size/Material	Volts/Amps/HP/Speed	Purchase Year
4 inch		2004 (Operator)

Manufacturer/Model
AC Valve, 77-4

Serial Number

Comment Field

Condition Rating: 2
Performance Rating: 3
Standard Useful Life: 30 years
Remaining Life: 16 years
Notes: Valve leaks at seal between plate (knife) and body.
Improvement: Replace seal or valve.

Pump Station No. 7

Mechanical Systems

Asset: 7-C-SR-1-WY, Starter - Pump 1
Subcomponent to: 7-W-PU-1

Size/Material	Volts/Amps/HP/Speed	Purchase Year
10 hp	10 hp	1989 (est)

Manufacturer/Model

Serial Number

Comment Field

Condition Rating: 2
Performance Rating: 1
Standard Useful Life: 15 years
Remaining Life: 0 years
Notes:

Improvement:

Asset: 7-W-MO-1-WY, Motor - Pump 1
Subcomponent to: 7-W-PU-1

Size/Material	Volts/Amps/HP/Speed	Purchase Year
10 hp	460/230 V, 13/25 A, 10 hp, 1735 RPM	2010 (Operator)

Manufacturer/Model
Flygt, 3127.095-005

Serial Number
3127095-1070015

Comment Field

Condition Rating: 2
Performance Rating: 1
Standard Useful Life: 30 years
Remaining Life: 22 years
Notes:

Improvement:

Asset: 7-W-PI-1-WY, Discharge Piping in Wet Well - Pump 1
Subcomponent to: 7-W-PU-1

Size/Material	Volts/Amps/HP/Speed	Purchase Year
4 inch, DIP		1989 (Operator)

Manufacturer/Model

Serial Number

Comment Field

Condition Rating: 3
Performance Rating: 1
Standard Useful Life: 50 years
Remaining Life: 21 years
Notes: Epoxy coated. Coating failing on flanges.
Improvement: Recoat piping to extend life.

Pump Station No. 7

Mechanical Systems

Asset: 7-W-PU-2, Submersible Pump 2

Size/Material	Volts/Amps/HP/Speed	Purchase Year
10 hp		2010 (Operator)

Manufacturer/Model
Flygt, CP3127-483

Duty (gpm) / Duty (TDH)
300 gpm, 57 ft

Serial Number
3127095-1150009

Comments

Condition Rating: 2
Performance Rating: 1
Standard Useful Life: 20 years
Remaining Life: 12 years
Notes:
Improvement:

Asset: 7-B-VA-2, Check Valve in Valve Vault - Pump 2
Subcomponent to: 7-W-PU-2

Size/Material	Volts/Amps/HP/Speed	Purchase Year
4 inch		2004 (Operator)

Manufacturer/Model
Val-Matic, 504 A Swing- Flop

Serial Number

Comment Field

Condition Rating: 2
Performance Rating: 1
Standard Useful Life: 25 years
Remaining Life: 11 years
Notes:
Improvement:

Asset: 7-B-VA-5-WY, Knife Gate Valve for Isolation - Pump 2
Subcomponent to: 7-W-PU-2

Size/Material	Volts/Amps/HP/Speed	Purchase Year
4 inch		2004 (Operator)

Manufacturer/Model
AC Valve, 77-4

Serial Number

Comment Field

Condition Rating: 2
Performance Rating: 3
Standard Useful Life: 30 years
Remaining Life: 16 years
Notes: Valve leaks at seal between plate (knife) and body.
Improvement: Replace seal or valve.

Pump Station No. 7

Mechanical Systems

Asset: 7-C-SR-2-WY, Starter - Pump 2
Subcomponent to: 7-W-PU-2

Size/Material	Volts/Amps/HP/Speed	Purchase Year
10 hp	10 hp	1989 (est)

Manufacturer/Model

Serial Number

Comment Field

Condition Rating: 2
Performance Rating: 1
Standard Useful Life: 15 years
Remaining Life: 0 years
Notes:
Improvement:

Asset: 7-W-MO-2-WY, Motor - Pump 2
Subcomponent to: 7-W-PU-2

Size/Material	Volts/Amps/HP/Speed	Purchase Year
10 hp	460/230 V, 13/25 A, 10 hp, 1735 RPM	2010 (Operator)

Manufacturer/Model
Flygt, 3127.095-005

Serial Number
3127095-1150009

Comment Field

Condition Rating: 2
Performance Rating: 1
Standard Useful Life: 30 years
Remaining Life: 22 years
Notes:
Improvement:

Asset: 7-W-PI-2-WY, Discharge Piping in Wet Well - Pump 2
Subcomponent to: 7-W-PU-2

Size/Material	Volts/Amps/HP/Speed	Purchase Year
4 inch, DIP		1989 (Operator)

Manufacturer/Model

Serial Number

Comment Field

Condition Rating: 3
Performance Rating: 1
Standard Useful Life: 50 years
Remaining Life: 21 years
Notes: Epoxy coated. Coating failing on flanges.
Improvement: Recoat piping to extend life.

Pump Station No. 7

Electrical and Power Systems

Asset: 7-C-PB-1, Distribution Panel

Size			
Manufacturer/Model			
GSC Inc, 1763-1A1			
Serial Number			
Volts	**Amps**	**HP**	**Speed**
120/240V	150A		
Comments			

Condition Rating: 2
Performance Rating: 1
Standard Useful Life: 20 years
Remaining Life: 0 years
Notes:

Improvement:

Purchase Year
1990 (est)

Asset: 7-C-PB-2, Panelboard

Size			
18 Ckts			
Manufacturer/Model			
GSC Inc, 1763-1-1A2			
Serial Number			
Volts	**Amps**	**HP**	**Speed**
120/240V	100A		
Comments			

Condition Rating: 2
Performance Rating: 1
Standard Useful Life: 20 years
Remaining Life: 0 years
Notes:

Improvement:

Purchase Year
1990 (est)

Asset: 7-C-PP-1, Control Panel

Size			
Manufacturer/Model			
Serial Number			
Volts	**Amps**	**HP**	**Speed**
Comments			

Condition Rating: 3
Performance Rating: 3
Standard Useful Life: 20 years
Remaining Life: 0 years
Notes: Conduits and wire eroded. No grounding.

Improvement: Replace control panel and components with new.

Purchase Year
1990 (est)

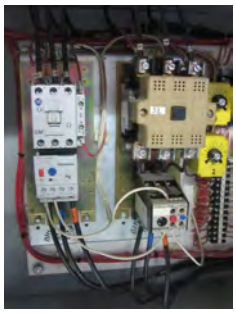

Pump Station No. 7

Electrical and Power Systems

Asset: 7-E-AS-1, Automatic Transfer Switch

Size			
100 amps			
Manufacturer/Model			
ASCO, 962			
Serial Number			
980895			
Volts	**Amps**	**HP**	**Speed**
240V	100A		
Comments			

Condition Rating: 2
Performance Rating: 2
Standard Useful Life: 20 years
Remaining Life: 0 years
Notes:

Improvement: Replace existing ATS with new, having same rating as existing.

Purchase Year
1989 (est)

Asset: 7-E-GE-1, Standby Generator - Natural Gas

Size			
38 kVA			
Manufacturer/Model			
Generac, 89A01540-S			
Serial Number			
887906			
Volts	**Amps**	**HP**	**Speed**
240V	90.2A		
Comments			

Condition Rating: 4
Performance Rating: 3
Standard Useful Life: 25 years
Remaining Life: 0 years
Notes: Conduits are visibly eroded. Local natural gas tank not installed.

Improvement: Replace existing standby generator with new, having same rating as existing. Provide local natural gas tank for standby generator, as required by the NEC. (NEC Article 700.12(B)(3))

Purchase Year
1989 (est)

Pump Station No. 7

Instrumentation / Controls

Asset: 7-C-LE-1, Bubbler Level System

Size	
Manufacturer/Model	
Rosemount, D2A12B051B1	
Serial Number	
3252	
Volts	**Amps**
Comments	

Condition Rating: 4
Performance Rating: 3
Standard Useful Life: 15 years
Remaining Life: 0 years
Notes: No float backup system. Item cost is for bubbler system and flaot switches.

Improvement: Replace bubbler level system with new. Provide back-up level float switches.

Purchase Year
1989

Asset: 7-C-VE-1, Autodialer

Size	
Manufacturer/Model	
RACO, Verbatim VSS	
Serial Number	
V19849	
Volts	**Amps**
Comments	

Condition Rating: 1
Performance Rating: 1
Standard Useful Life: 20 years
Remaining Life: 0 years
Notes:

Improvement:

Purchase Year
1989 (est)

Pump Station No. 8

Year Originally Constructed	Year of Latest Upgrade
1980 (est)	
Address	
22875 Princeton Place	
Emergency Generator	**Bypass Equipment**
On-Site Generator	No Bypass Equipment
On-Site Storage Capacity (gal)	**Force Main Diameter (inches)**
10,479 gal; 17 hours (ADWF)	6
Facility Description	
Station serves 48 single-family homes.	

Inspection Notes

Operator Concerns

- Site does not have bypass pumping quick-connects.
- Heavy grates require 2 people to open.
- Site does not have safety grates on all vaults.
- CVSan staff would like to add backup level system due to faulty bubbler.

Recommended Site Improvements

- Add bypass/pigging connection
- Add safety grates, even on shallow vaults to protect worker safety.

Pump Station No. 8

Condition Rating Index:
1 - Excellent
2 - Slight Visible Degradation
3 - Visible Degradation
4 - Integrity Moderately Compromised
5 - Integrity Severely Compromised

Performance Rating Index:
1 - Functioning as Intended
2 - In Service, High OM Costs
3 - In Service, Function Impaired
4 - In Service, Function Highly Impaired
5 - Not Functioning as Intended

Site / Civil

Asset: 8-M-AW-1-WY, Site Paving

Size / Material	Condition Rating: 1
1,600 sq ft, Concrete	Performance Rating: 1
Purchase Year	Standard Useful Life: 50 years
1980 (Operator)	Remaining Life: 12 years
Comments	Notes:
	Improvement:

Asset: 8-M-EN-1-WY, Site Fencing

Size / Material	Condition Rating: 1
150 LF, Wood	Performance Rating: 1
Purchase Year	Standard Useful Life: 20 years
1980 (Operator)	Remaining Life: 0 years
Comments	Notes:
	Improvement:

Asset: 8-M-SG-1-WY, Swing Gate
Subcomponent to: 8-M-EN-1-WY

Size/Material	Volts/Amps/HP/Speed	Purchase Year
Wood		1980 (Operator)

Manufacturer/Model	Condition Rating: 1
	Performance Rating: 1
Serial Number	Standard Useful Life: 40 years
	Remaining Life: 2 years
Comment Field	Notes:
	Improvement:

Pump Station No. 8

Site / Civil

Asset: 8-M-MR-1-WY, Monorail to Lift Pumps

Size / Material	Condition Rating: 1
H Bar	Performance Rating: 1
Purchase Year	Standard Useful Life: 20 years
1980 (Operator)	Remaining Life: 0 years
Comments	Notes: Hoist is used to pull pumps.
	Improvement:

Asset: 8-M-PI-1-WY, Force Main Piping

Size / Material	Condition Rating: -
6 inch	Performance Rating: -
Purchase Year	Standard Useful Life: 50 years
1980 (Operator)	Remaining Life: 12 years
Comments	Notes:
	Improvement:

Asset: 8-R-WS-1-WY, Natural Gas Service Line

Size / Material	Condition Rating: 2
1 inch, Copper	Performance Rating: 1
Purchase Year	Standard Useful Life: 50 years
1980 (Operator)	Remaining Life: 12 years
Comments	Notes: Slight corrosion on valve
	Improvement:

Pump Station No. 8

Site / Civil

Asset: 8-S-TK-1-WY, Emergency Storage Tank

Size / Material	Condition Rating: -
6,500 gal, Concrete	Performance Rating: 1
Purchase Year	Standard Useful Life: 30 years
1980 (Operator)	Remaining Life: 0 years
Comments	Notes: Unknown capacity. Unknown condition.
Located underground, east of wet well	Improvement: Inspect.

Pump Station No. 8

Structural / Architectural

Asset: 8-M-VT-1-WY, Valve Vault

Size / Material
Concrete

Manufacturer/Model

Serial Number

Comments

Condition Rating 2
Performance Rating: 1
Standard Useful Life: 40 years
Remaining Life: 2 years
Notes:

Improvement:

Purchase Year
1980 (Operator)

Asset: 8-M-HA-1-WY, Valve Vault Hatch
Subcomponent to: 8-M-VT-1-WY

Size/Material
Galvanized Steel

Manufacturer/Model

Serial Number

Comment Field

Volts/Amps/HP/Speed

Condition Rating: 2
Performance Rating: 1
Standard Useful Life: 20 years
Remaining Life: 0 years
Notes: Very Heavy

Improvement: Replace with Bilco aluminum spring-assisted hatch with safety grates.

Purchase Year
1980 (Operator)

Asset: 8-M-VT-2-WY, ARV and Force Main Vault

Size / Material
Concrete

Manufacturer/Model

Serial Number

Comments

Condition Rating 2
Performance Rating: 1
Standard Useful Life: 40 years
Remaining Life: 2 years
Notes:

Improvement:

Purchase Year
1980 (Operator)

Pump Station No. 8

Structural / Architectural

Asset: 8-M-HA-2-WY, ARV Vault Hatch
Subcomponent to: 8-M-VT-2-WY

Size/Material	Volts/Amps/HP/Speed	Purchase Year
Galvanized Steel		1980 (Operator)

Manufacturer/Model

Serial Number

Comment Field

Condition Rating: 2
Performance Rating: 1
Standard Useful Life: 20 years
Remaining Life: 0 years
Notes: Very Heavy

Improvement: Replace with Bilco aluminum spring-assisted hatch with safety grates.

Asset: 8-R-EN-1-WY, Structure Enclosing Electrical Cabinet & Generator

Size / Material	Purchase Year
225 sq ft, CMU	1980 (Operator)

Manufacturer/Model

Serial Number

Comments

Roof material is shake.

Condition Rating 1
Performance Rating: 1
Standard Useful Life: 50 years
Remaining Life: 12 years
Notes: Building looks new, slight corrosion on door.

Improvement:

Asset: 8-W-GL-1-WY, Wet Well

Size / Material	Purchase Year
RCP	1980 (Operator)

Manufacturer/Model

Serial Number

Comments

Condition Rating 2
Performance Rating: 2
Standard Useful Life: 40 years
Remaining Life: 2 years
Notes: Roots get inside through multiple points

Improvement: Cut and chemically treat roots, install wet well liner, and grout annular space.

Pump Station No. 8

Structural / Architectural

Asset: 8-W-HA-1-WY, Wet Well Hatch
Subcomponent to: 8-W-GL-1-WY

Size/Material	Volts/Amps/HP/Speed	Purchase Year
Galvanized Steel		1980 (Operator)

Manufacturer/Model

Serial Number

Comment Field

Condition Rating: 2
Performance Rating: 1
Standard Useful Life: 20 years
Remaining Life: 0 years
Notes: Very Heavy

Improvement: Replace with Bilco aluminum spring-assisted hatch with safety grates.

Pump Station No. 8

Mechanical Systems

Asset: 8-B-QC-1, Coupling

Size/Material	Volts/Amps/HP/Speed	Purchase Year
4 inch		1980 (Operator)

Manufacturer/Model	Duty (gpm) / Duty (TDH)

Serial Number

Comments

Condition Rating: 3
Performance Rating: 1
Standard Useful Life: 20 years
Remaining Life: 0 years
Notes:

Improvement:

Asset: 8-B-QC-2, Coupling

Size/Material	Volts/Amps/HP/Speed	Purchase Year
4 inch		1980 (Operator)

Manufacturer/Model	Duty (gpm) / Duty (TDH)

Serial Number

Comments

Condition Rating: 3
Performance Rating: 1
Standard Useful Life: 20 years
Remaining Life: 0 years
Notes:

Improvement:

Pump Station No. 8

Mechanical Systems

Asset: 8-B-VA-5, ARV for Bypass

Size/Material	Volts/Amps/HP/Speed	Purchase Year
2 inch		1980 (Operator)

Manufacturer/Model

Empire, 0450A1

Duty (gpm) / Duty (TDH)

Serial Number

Comments

Condition Rating: 2
Performance Rating: 1
Standard Useful Life: 30 years
Remaining Life: 0 years
Notes: Air valve was for air compressor hook up, which is no longer in use.

Improvement: Remove Air valve. Not located on high point in FM.

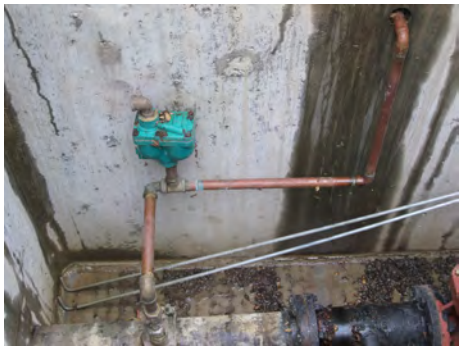

Asset: 8-B-VA-6-WY, Gate Valve 1 in the ARV Vault

Size/Material	Volts/Amps/HP/Speed	Purchase Year
4 inch		1980 (Operator)

Manufacturer/Model

Duty (gpm) / Duty (TDH)

Serial Number

Comments

Condition Rating: 2
Performance Rating: 1
Standard Useful Life: 30 years
Remaining Life: 0 years
Notes:

Improvement:

Pump Station No. 8

Mechanical Systems

Asset: 8-B-VA-7-WY, Gate Valve 2 in the ARV Vault

Size/Material	Volts/Amps/HP/Speed	Purchase Year
4 inch		1980 (Operator)

Manufacturer/Model	Duty (gpm) / Duty (TDH)

Serial Number

Comments

Condition Rating: 2
Performance Rating: 1
Standard Useful Life: 30 years
Remaining Life: 0 years
Notes:

Improvement:

Asset: 8-C-CP-1, Air Compressor

Size/Material	Volts/Amps/HP/Speed	Purchase Year
		1980 (Operator)

Manufacturer/Model	Duty (gpm) / Duty (TDH)
Gast, 27866	

Serial Number

Comments
Not at site

Condition Rating: NA
Performance Rating: NA
Standard Useful Life: 20 years
Remaining Life: 0 years
Notes: Not at site.

Improvement:

Pump Station No. 8

Mechanical Systems

Asset: 8-W-PU-1, Submersible Pump 1

Size/Material	Volts/Amps/HP/Speed	Purchase Year
20 hp		2009 (Operator)

Manufacturer/Model
Flygt, CP3152H-452

Serial Number

Comments

Duty (gpm) / Duty (TDH)
6 gpm, 117 ft

Condition Rating: 2
Performance Rating: 1
Standard Useful Life: 20 years
Remaining Life: 11 years
Notes: Rebuilt at 2100 +/- hrs. Current hours : 2250 hrs.

Improvement:

Asset: 8-B-VA-1, Check Valve for Bypass - Pump 1
Subcomponent to: 8-W-PU-1

Size/Material	Volts/Amps/HP/Speed	Purchase Year
4 inch		1980 (Operator)

Manufacturer/Model
Stockham, 108-4

Serial Number

Comment Field

Condition Rating: 3
Performance Rating: 1
Standard Useful Life: 25 years
Remaining Life: 0 years
Notes:

Improvement:

Asset: 8-B-VA-3, Gate Valve for Bypass - Pump 1
Subcomponent to: 8-W-PU-1

Size/Material	Volts/Amps/HP/Speed	Purchase Year
4 inch		1980 (Operator)

Manufacturer/Model
Clow Valve, 1-03-0617

Serial Number

Comment Field

Condition Rating: 2
Performance Rating: 1
Standard Useful Life: 30 years
Remaining Life: 0 years
Notes:

Improvement:

Pump Station No. 8

Mechanical Systems

Asset: 8-C-SR-1-WY, Starter - Pump 1
Subcomponent to: 8-W-PU-1

Size/Material	Volts/Amps/HP/Speed	Purchase Year
20 hp	20 hp	1990 (nameplate)

Manufacturer/Model

Serial Number

Comment Field

Condition Rating: 1
Performance Rating: 1
Standard Useful Life: 15 years
Remaining Life: 0 years
Notes:

Improvement:

Asset: 8-W-MO-1-WY, Motor - Pump 1
Subcomponent to: 8-W-PU-1

Size/Material	Volts/Amps/HP/Speed	Purchase Year
20 hp	460/230 V, 29/59 A, 23 hp, 1745 RPM	2009 (Operator)

Manufacturer/Model
Flygt, 9850034

Serial Number
3152.091-027

Comment Field

Condition Rating: 2
Performance Rating: 1
Standard Useful Life: 30 years
Remaining Life: 21 years
Notes:

Improvement:

Asset: 8-W-PI-1-WY, Discharge Piping in Wet Well - Pump 1
Subcomponent to: 8-W-PU-1

Size/Material	Volts/Amps/HP/Speed	Purchase Year
4 inch, DIP		1980 (Operator)

Manufacturer/Model

Serial Number

Comment Field

Condition Rating: 2
Performance Rating: 1
Standard Useful Life: 50 years
Remaining Life: 12 years
Notes: Corrosion on flanges and elbow.

Improvement: Recoat

Pump Station No. 8

Mechanical Systems

Asset: 8-W-PU-2, Submersible Pump 2

Size/Material	Volts/Amps/HP/Speed	Purchase Year
20 hp		2009 (Operator)

Manufacturer/Model
Flygt, CP3152H-452

Duty (gpm) / Duty (TDH)
6 gpm, 117 ft

Serial Number

Comments

Condition Rating: 2
Performance Rating: 1
Standard Useful Life: 20 years
Remaining Life: 11 years
Notes: Rebuilt at 2240 hrs two years ago.
Current hours : 2414 hrs.

Improvement:

Asset: 8-B-VA-2, Check Valve for Bypass - Pump 2
Subcomponent to: 8-W-PU-2

Size/Material	Volts/Amps/HP/Speed	Purchase Year
4 inch		1980 (Operator)

Manufacturer/Model
Stockham, 108-4

Serial Number

Comment Field

Condition Rating: 2
Performance Rating: 1
Standard Useful Life: 25 years
Remaining Life: 0 years
Notes:

Improvement:

Asset: 8-B-VA-4, Gate Valve for Bypass - Pump 2
Subcomponent to: 8-W-PU-2

Size/Material	Volts/Amps/HP/Speed	Purchase Year
4 inch		1980 (Operator)

Manufacturer/Model
Clow Valve, 1-03-0617

Serial Number

Comment Field

Condition Rating: 2
Performance Rating: 1
Standard Useful Life: 30 years
Remaining Life: 0 years
Notes:

Improvement:

Pump Station No. 8

Mechanical Systems

Asset: 8-C-SR-2-WY, Starter - Pump 2
Subcomponent to: 8-W-PU-2

Size/Material	Volts/Amps/HP/Speed	Purchase Year
20 hp	20 hp	1990 (nameplate)

Manufacturer/Model

Serial Number

Comment Field

Condition Rating: 1
Performance Rating: 1
Standard Useful Life: 15 years
Remaining Life: 0 years
Notes:

Improvement:

Asset: 8-W-MO-2-WY, Motor - Pump 2
Subcomponent to: 8-W-PU-2

Size/Material	Volts/Amps/HP/Speed	Purchase Year
20 hp	460/230 V, 29/59 A, 23 hp, 1745 RPM	2009 (Operator)

Manufacturer/Model
Flygt, 9850035

Serial Number
3152.091-027

Comment Field

Condition Rating: 2
Performance Rating: 1
Standard Useful Life: 30 years
Remaining Life: 21 years
Notes:

Improvement:

Asset: 8-W-PI-2-WY, Discharge Piping in Wet Well - Pump 2
Subcomponent to: 8-W-PU-2

Size/Material	Volts/Amps/HP/Speed	Purchase Year
4 inch, DIP		1980 (Operator)

Manufacturer/Model

Serial Number

Comment Field

Condition Rating: 2
Performance Rating: 1
Standard Useful Life: 50 years
Remaining Life: 12 years
Notes: Corrosion on flanges and elbow.

Improvement: Recoat

Pump Station No. 8

Mechanical Systems

Asset: 8-W-PU-3-WY, Submersible Pump (Spare)

Size/Material	Volts/Amps/HP/Speed	Purchase Year
20 hp		2014 (Operator)

Manufacturer/Model	Duty (gpm) / Duty (TDH)
Flygt, NP3153	

Serial Number

Comments

Condition Rating: 2
Performance Rating: 1
Standard Useful Life: 20 years
Remaining Life: 16 years
Notes: About 100 hours on it at time of inspection.

Improvement:

Asset: 8-W-MO-3-WY, Motor - Spare Pump
Subcomponent to: 8-W-PU-3-WY

Size/Material	Volts/Amps/HP/Speed	Purchase Year
20 hp	460/230 V, 26/52 A, 20 hp, 1755 RPM	2014 (Operator)

Manufacturer/Model
Flygt, 3153.095-0303

Serial Number
3153.095-1480011

Comment Field

Condition Rating: NA
Performance Rating: NA
Standard Useful Life: 30 years
Remaining Life: 26 years
Notes:

Improvement:

Pump Station No. 8

Electrical and Power Systems

Asset: 8-C-EN-1, Control Panel

Size			
Manufacturer/Model			
Klockner-Moeller, GK SD80			
Serial Number			
Volts	**Amps**	**HP**	**Speed**
120/240V			
Comments			

Condition Rating: 1
Performance Rating: 1
Standard Useful Life: 20 years
Remaining Life: 0 years
Notes: Total of three breakers. Breakers are functioning well, but are obsolete.

Improvement: Replace breakers with new, having same rating as existing.

Purchase Year
1980 (est)

Asset: 8-C-PB-1, Panelboard

Size			
30 Ckts			
Manufacturer/Model			
GE, A-Series			
Serial Number			
AF315			
Volts	**Amps**	**HP**	**Speed**
120/240V	125A		
Comments			

Condition Rating: 2
Performance Rating: 1
Standard Useful Life: 20 years
Remaining Life: 0 years
Notes:

Improvement:

Purchase Year
1980 (est)

Asset: 8-C-PB-2, Distribution Panel

Size			
Manufacturer/Model			
GE, Spectra Series			
Serial Number			
510-97099-T			
Volts	**Amps**	**HP**	**Speed**
120/240V	250A		
Comments			

Condition Rating: 2
Performance Rating: 1
Standard Useful Life: 20 years
Remaining Life: 0 years
Notes:

Improvement:

Purchase Year
1990 (nameplate)

Pump Station No. 8

Electrical and Power Systems

Asset: 8-E-AS-1, Automatic Transfer Switch

Size
100 amps

Manufacturer/Model
Spectrum Detroit Diesel, K81004

Serial Number

Volts	Amps	HP	Speed
	100A		

Comments

Condition Rating: 1
Performance Rating: 1
Standard Useful Life: 20 years
Remaining Life: 0 years
Notes: Only 'Auto' and 'Test' controls. No indicating lights.

Improvement:

Purchase Year
1980 (est)

Asset: 8-E-GE-1, Standby Generator - Natural Gas

Size
125 kVA

Manufacturer/Model
Spectrum Detroit Diesel, 100GS60

Serial Number
600067

Volts	Amps	HP	Speed

Comments

Condition Rating: 2
Performance Rating: 1
Standard Useful Life: 25 years
Remaining Life: 5 years
Notes: Local natural gas tank not installed.

Improvement: Provide local natural gas tank for standby generator, as required by the NEC. (NEC Article 700.12(B)(3))

Purchase Year
1998 (nameplate)

Pump Station No. 8

Instrumentation / Controls

Asset: 8-C-LE-1, Bubbler Level System

Size	
Manufacturer/Model	
GAST	
Serial Number	
Volts	**Amps**
Comments	

Condition Rating: 1
Performance Rating: 1
Standard Useful Life: 15 years
Remaining Life: 0 years
Notes: Staff would like back-up level float switches.

Improvement: Provide back-up level float switches.

Purchase Year
1980 (est)

Asset: 8-C-VE-1, Autodialer

Size	
Manufacturer/Model	
RACO, Verbatim VSS	
Serial Number	
V09313	
Volts	**Amps**
Comments	

Condition Rating: 1
Performance Rating: 1
Standard Useful Life: 20 years
Remaining Life: 0 years
Notes:

Improvement:

Purchase Year
1980 (Operator)

Pump Station No. 9

Year Originally Constructed	Year of Latest Upgrade
1980 (est)	
Address	
18575 Buren Place	
Emergency Generator	**Bypass Equipment**
On-Site Generator	No Bypass Equipment
On-Site Storage Capacity (gal)	**Force Main Diameter (inches)**
10,631 gal; 9 hours (ADWF)	4
Facility Description	
Station serves 87 single-family homes.	

Inspection Notes

Operator Concerns

Recommended Site Improvements

- Add safety grates, even on shallow vaults to protect worker safety.

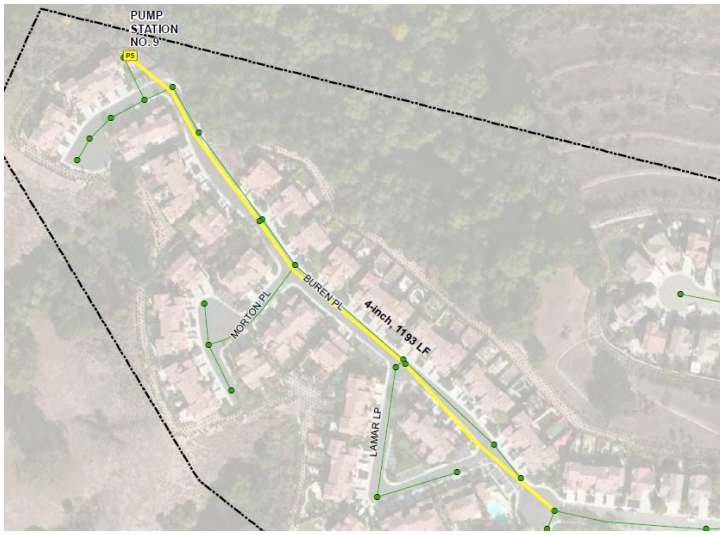

Pump Station No. 9

Condition Rating Index:
1 - Excellent
2 - Slight Visible Degradation
3 - Visible Degradation
4 - Integrity Moderately Compromised
5 - Integrity Severely Compromised

Performance Rating Index:
1 - Functioning as Intended
2 - In Service, High OM Costs
3 - In Service, Function Impaired
4 - In Service, Function Highly Impaired
5 - Not Functioning as Intended

Site / Civil

Asset: 9-C-PI-1-WY, Compressor Piping

Size / Material
1 inch, Copper/Brass

Purchase Year
1980 (est)

Comments

Condition Rating: 2
Performance Rating: 1
Standard Useful Life: 50 years
Remaining Life: 12 years
Notes: Not in service. Valve is in closed position.

Improvement:

Asset: 9-M-AW-1-WY, Site Paving

Size / Material
1,500 sq ft, Asphalt

Purchase Year
1980 (est)

Comments

Condition Rating: 2
Performance Rating: 1
Standard Useful Life: 50 years
Remaining Life: 12 years
Notes:

Improvement:

Asset: 9-M-EN-1-WY, Site Fencing

Size / Material
200 LF, Wood

Purchase Year
2016 (est)

Comments

Condition Rating: 2
Performance Rating: 1
Standard Useful Life: 20 years
Remaining Life: 18 years
Notes: Replaced portions of fence and all posts on north side.

Improvement: Add lag bolts to secure boards from pulling out.

Pump Station No. 9

Site / Civil

Asset: 9-M-MH-1-WY, Manhole (Located West of Building)

Size / Material	Condition Rating: 3
48 inch, RCP	Performance Rating: 1
Purchase Year	Standard Useful Life: 50 years
1980 (est)	Remaining Life: 12 years
Comments	Notes: Concrete at collar spalling. Some joints also spalling. Corrosion at frame.
	Improvement: Repair underlying concrete, coat manhole and replace frame, collar and cover.

Asset: 9-M-PI-1-WY, Force Main Piping

Size / Material	Condition Rating: -
4 inch	Performance Rating: -
Purchase Year	Standard Useful Life: 50 years
1980 (est)	Remaining Life: 12 years
Comments	Notes:
	Improvement:

Asset: 9-R-WS-1-WY, Potable Water Service Line

Size / Material	Condition Rating: 1
1 inch, Copper	Performance Rating: 1
Purchase Year	Standard Useful Life: 50 years
1980 (est)	Remaining Life: 12 years
Comments	Notes:
	Improvement:

Pump Station No. 9

Structural / Architectural

Asset: 9-M-MR-1-WY, Monorail to Lift Pumps

Size / Material	Condition Rating 1	Purchase Year
Galvanized Steel	Performance Rating: 1	1980 (est)
Manufacturer/Model	Standard Useful Life: 20 years	
	Remaining Life: 0 years	
Serial Number	Notes: Hoist is used to pull pumps.	
Comments	Improvement:	

Asset: 9-M-VT-1-WY, Valve Vault

Size / Material	Condition Rating 2	Purchase Year
4 x 6 sq ft, Concrete	Performance Rating: 1	1980 (est)
Manufacturer/Model	Standard Useful Life: 40 years	
	Remaining Life: 2 years	
Serial Number	Notes:	
Comments	Improvement:	

Asset: 9-M-HA-1-WY, Valve Vault Hatch
Subcomponent to: 9-M-VT-1-WY

Size/Material	Volts/Amps/HP/Speed	Purchase Year
4 x 6 sq ft, Aluminum		1980 (est)
Manufacturer/Model	Condition Rating: 2	
	Performance Rating: 1	
Serial Number	Standard Useful Life: 20 years	
	Remaining Life: 0 years	
Comment Field	Notes:	
	Improvement: Retrofit safety grates.	

Pump Station No. 9

Structural / Architectural

Asset: 9-M-VT-2-WY, Overflow Connection Vault

Size / Material
4 x 6 sq ft, Concrete

Manufacturer/Model

Serial Number

Comments

Condition Rating 2
Performance Rating: 1
Standard Useful Life: 40 years
Remaining Life: 2 years
Notes: No ARV here.

Improvement:

Purchase Year
1980 (est)

Asset: 9-M-HA-2-WY, Overflow Connection Vault Hatch
Subcomponent to: 9-M-VT-2-WY

Size/Material
4 x 6 sq ft, Aluminum

Manufacturer/Model

Serial Number

Comment Field

Volts/Amps/HP/Speed

Condition Rating: 2
Performance Rating: 1
Standard Useful Life: 20 years
Remaining Life: 0 years
Notes:

Improvement: Retrofit safety grates.

Purchase Year
1980 (est)

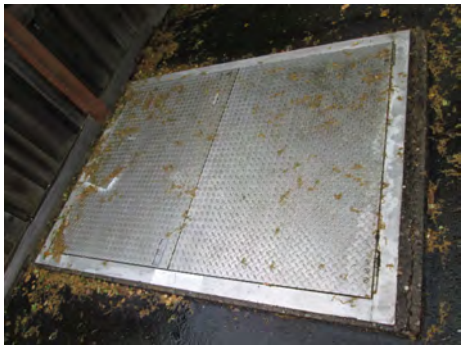

Asset: 9-R-EN-1-WY, Structure Enclosing Electrical Cabinet & Generator

Size / Material
289 sq ft, Concrete

Manufacturer/Model

Serial Number

Comments
Roof material is shake.

Condition Rating 1
Performance Rating: 1
Standard Useful Life: 50 years
Remaining Life: 12 years
Notes:

Improvement:

Purchase Year
1980 (est)

Pump Station No. 9

Structural / Architectural

Asset: 9-W-GL-1-WY, Wet Well

Size / Material	Condition Rating 2	Purchase Year
7 ft, RCP with T-Lock liner	**Performance Rating:** 1	1980 (est)
Manufacturer/Model	**Standard Useful Life:** 40 years	
	Remaining Life: 2 years	
Serial Number	**Notes:**	
Comments	**Improvement:**	

Asset: 9-W-HA-1-WY, Wet Well Hatch
Subcomponent to: 9-W-GL-1-WY

Size/Material	Volts/Amps/HP/Speed	Purchase Year
Aluminum		1980 (est)
Manufacturer/Model	**Condition Rating:** 2	
	Performance Rating: 1	
Serial Number	**Standard Useful Life:** 20 years	
	Remaining Life: 0 years	
Comment Field	**Notes:** Recently added locks.	
	Improvement: Retrofit safety grates.	

Pump Station No. 9

Mechanical Systems

Asset: 9-B-CP-1, Air Compressor

Size/Material	Volts/Amps/HP/Speed	Purchase Year
		1980 (est)

Manufacturer/Model	Duty (gpm) / Duty (TDH)
Comp Air, DIOCKO 7-168	

Serial Number

Comments

Condition Rating: -
Performance Rating: -
Standard Useful Life: 20 years
Remaining Life: 0 years
Notes: Not used anymore. Might not be working.

Improvement: Abandon.

Asset: 9-B-CP-2, Air Compressor for Bubbler

Size/Material	Volts/Amps/HP/Speed	Purchase Year
		1980 (est)

Manufacturer/Model	Duty (gpm) / Duty (TDH)
Rietschle Thomas, 107CAB18	

Serial Number

Comments

Condition Rating: -
Performance Rating: -
Standard Useful Life: 20 years
Remaining Life: 0 years
Notes: Not connected.

Improvement: Replace bubbler level system with ultrasonic level sensor and connect to future SCADA system.

Pump Station No. 9

Mechanical Systems

Asset: 9-B-CP-3, Air Compressor

Size/Material	Volts/Amps/HP/Speed	Purchase Year
		1980 (est)

Manufacturer/Model
Rietschle Thomas, 107CAB18

Duty (gpm) / Duty (TDH)

Serial Number

Comments

Condition Rating: -
Performance Rating: -
Standard Useful Life: 20 years
Remaining Life: 0 years
Notes: Not inspected

Improvement: Abandon.

Asset: 9-B-QC-1, Coupling

Size/Material	Volts/Amps/HP/Speed	Purchase Year
4 inch		1980 (est)

Manufacturer/Model
Smith-Blair, 441

Duty (gpm) / Duty (TDH)

Serial Number

Comments
Looks newer than the piping

Condition Rating: 1
Performance Rating: 1
Standard Useful Life: 20 years
Remaining Life: 0 years
Notes: Looks newer than piping.

Improvement:

Pump Station No. 9

Mechanical Systems

Asset: 9-B-QC-2, Coupling

Size/Material	Volts/Amps/HP/Speed	Purchase Year
4 inch		1980 (est)
Manufacturer/Model	**Duty (gpm) / Duty (TDH)**	
Smith-Blair, 441		
Serial Number	**Condition Rating:** 1	
	Performance Rating: 1	
Comments	**Standard Useful Life:** 20 years	
Looks newer than the piping	**Remaining Life:** 0 years	
	Notes: Looks newer than piping.	
	Improvement:	

Asset: 9-B-VA-1, Gate Valve for Isolation

Size/Material	Volts/Amps/HP/Speed	Purchase Year
4 inch		1980 (est)
Manufacturer/Model	**Duty (gpm) / Duty (TDH)**	
1-030-067		
Serial Number	**Condition Rating:** 2	
	Performance Rating: 1	
Comments	**Standard Useful Life:** 30 years	
	Remaining Life: 0 years	
	Notes:	
	Improvement:	

Pump Station No. 9

Mechanical Systems

Asset: 9-B-VA-2, Gate Valve for Isolation

Size/Material	Volts/Amps/HP/Speed	Purchase Year
4 inch		1980 (est)
Manufacturer/Model	**Duty (gpm) / Duty (TDH)**	
1-030-067		
Serial Number	**Condition Rating:** 3	
	Performance Rating: 1	
Comments	**Standard Useful Life:** 30 years	
	Remaining Life: 0 years	
	Notes:	
	Improvement: Long term (5-10 years): replace discharge piping and appurtenances.	

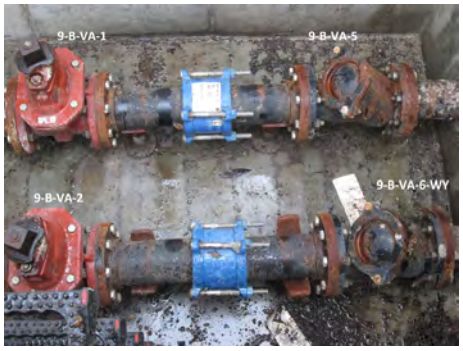

Asset: 9-B-VA-3, Gate Valve for Isolation

Size/Material	Volts/Amps/HP/Speed	Purchase Year
4 inch		1980 (est)
Manufacturer/Model	**Duty (gpm) / Duty (TDH)**	
1-030-067		
Serial Number	**Condition Rating:** 2	
	Performance Rating: 1	
Comments	**Standard Useful Life:** 30 years	
	Remaining Life: 0 years	
	Notes:	
	Improvement:	

Pump Station No. 9

Mechanical Systems

Asset: 9-B-VA-4, Gate Valve for Isolation

Size/Material	Volts/Amps/HP/Speed	Purchase Year
4 inch		1980 (est)
Manufacturer/Model	**Duty (gpm) / Duty (TDH)**	
1-030-067		
Serial Number	**Condition Rating:** 2	
	Performance Rating: 1	
Comments	**Standard Useful Life:** 30 years	
	Remaining Life: 0 years	
	Notes:	
	Improvement:	

Asset: 9-B-VA-5, Ball Check Valve

Size/Material	Volts/Amps/HP/Speed	Purchase Year
4 inch		1980 (est)
Manufacturer/Model	**Duty (gpm) / Duty (TDH)**	
Amsterdam, DN100		
Serial Number	**Condition Rating:** 3	
	Performance Rating: 1	
Comments	**Standard Useful Life:** 25 years	
	Remaining Life: 0 years	
	Notes:	
	Improvement: Long term (5-10 years): replace discharge piping and appurtenances.	

Pump Station No. 9

Mechanical Systems

Asset: 9-B-VA-6-WY, Ball Check Valve

Size/Material	Volts/Amps/HP/Speed	Purchase Year
4 inch		1980 (est)
Manufacturer/Model	**Duty (gpm) / Duty (TDH)**	
Amsterdam, DN100		
Serial Number		
Comments		

Condition Rating: 3
Performance Rating: 1
Standard Useful Life: 25 years
Remaining Life: 0 years
Notes:

Improvement: Long term (5-10 years): replace discharge piping and appurtenances.

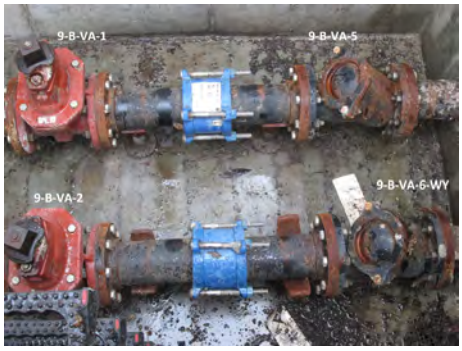

Pump Station No. 9

Mechanical Systems

Asset: 9-W-PU-1, Submersible Pump 1

Size/Material	Volts/Amps/HP/Speed	Purchase Year
5 hp	1745 RPM	2012 (Operator)

Manufacturer/Model
Flygt, CP3102X-435

Serial Number
3102095-1280011

Comments

Duty (gpm) / Duty (TDH)
4 gpm, 39 ft

Condition Rating: 2
Performance Rating: 1
Standard Useful Life: 20 years
Remaining Life: 14 years
Notes:

Improvement:

Asset: 9-C-SR-1-WY, Starter - Pump 1
Subcomponent to: 9-W-PU-1

Size/Material	Volts/Amps/HP/Speed	Purchase Year
5 hp	5 hp	1980 (est)

Manufacturer/Model

Serial Number

Comment Field

Condition Rating: 1
Performance Rating: 1
Standard Useful Life: 15 years
Remaining Life: 0 years
Notes:

Improvement:

Asset: 9-W-MO-1-WY, Motor - Pump 1
Subcomponent to: 9-W-PU-1

Size/Material	Volts/Amps/HP/Speed	Purchase Year
5 hp	230 V, 5 hp, 1700 RPM	2012 (Operator)

Manufacturer/Model
Flygt

Serial Number

Comment Field

Condition Rating: 2
Performance Rating: 1
Standard Useful Life: 30 years
Remaining Life: 24 years
Notes:

Improvement:

Pump Station No. 9

Mechanical Systems

Asset: 9-W-PI-1-WY, Discharge Piping in Wet Well - Pump 1
Subcomponent to: 9-W-PU-1

Size/Material	Volts/Amps/HP/Speed	Purchase Year
4 inch, DIP		1980 (est)

Manufacturer/Model

Serial Number

Comment Field

Condition Rating: 3
Performance Rating: 1
Standard Useful Life: 50 years
Remaining Life: 12 years
Notes: Very corroded elbows.

Improvement: Long term (5-10 years): replace discharge piping and appurtenances.

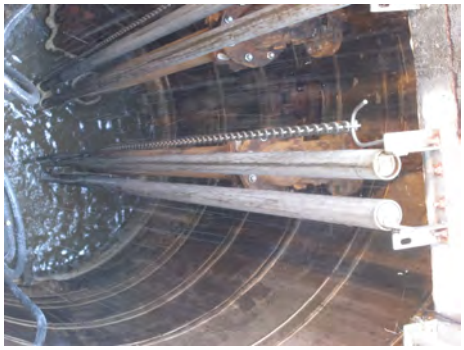

Pump Station No. 9

Mechanical Systems

Asset: 9-W-PU-2, Submersible Pump 2

Size/Material	Volts/Amps/HP/Speed	Purchase Year
5 hp	1745 RPM	2012 (Operator)

Manufacturer/Model
Flygt, CP3102X-435

Serial Number
3102095-1280012

Comments

Duty (gpm) / Duty (TDH)
4 gpm, 39 ft

Condition Rating: 2
Performance Rating: 1
Standard Useful Life: 20 years
Remaining Life: 14 years
Notes:

Improvement:

Asset: 9-C-SR-2-WY, Starter - Pump 2
Subcomponent to: 9-W-PU-2

Size/Material	Volts/Amps/HP/Speed	Purchase Year
5 hp	5 hp	1980 (est)

Manufacturer/Model

Serial Number

Comment Field

Condition Rating: 1
Performance Rating: 1
Standard Useful Life: 15 years
Remaining Life: 0 years
Notes:

Improvement:

Asset: 9-W-MO-2-WY, Motor - Pump 2
Subcomponent to: 9-W-PU-2

Size/Material	Volts/Amps/HP/Speed	Purchase Year
5 hp	230 V, 5 hp, 1700 RPM	2012 (Operator)

Manufacturer/Model
Flygt

Serial Number

Comment Field

Condition Rating: 2
Performance Rating: 1
Standard Useful Life: 30 years
Remaining Life: 24 years
Notes:

Improvement:

Pump Station No. 9

Mechanical Systems

Asset: 9-W-PI-2-WY, Discharge Piping in Wet Well - Pump 2
Subcomponent to: 9-W-PU-2

Size/Material	Volts/Amps/HP/Speed	Purchase Year
4 inch, DIP		1980 (est)

Manufacturer/Model

Serial Number

Comment Field

Condition Rating: 3
Performance Rating: 1
Standard Useful Life: 50 years
Remaining Life: 12 years
Notes: Very corroded elbows.

Improvement: Long term (5-10 years): replace discharge piping and appurtenances.

Asset: 9-W-PU-3, Submersible Pump (Spare)

Size/Material	Volts/Amps/HP/Speed	Purchase Year
5 hp	1715 RPM	2012 (est)

Manufacturer/Model

Flygt

Duty (gpm) / Duty (TDH)

Serial Number

Comments

Condition Rating: -
Performance Rating: -
Standard Useful Life: 20 years
Remaining Life: 14 years
Notes: CVSan staff do not recommend using this pump. Not at site during inspection.
Improvement:

Pump Station No. 9

Electrical and Power Systems

Asset: 9-C-PB-1, Panelboard

Size			
30 Ckts			
Manufacturer/Model			
GE, A-Series			
Serial Number			
AB313			
Volts	**Amps**	**HP**	**Speed**
120/240V	125A		
Comments			

Condition Rating: 1
Performance Rating: 1
Standard Useful Life: 20 years
Remaining Life: 0 years
Notes:

Improvement:

Purchase Year
1980 (est)

Asset: 9-C-PB-2, Distribution Panel

Size			
30 Ckts			
Manufacturer/Model			
GE, A-Series			
Serial Number			
AB373			
Volts	**Amps**	**HP**	**Speed**
120/240V	225A		
Comments			

Condition Rating: 1
Performance Rating: 1
Standard Useful Life: 20 years
Remaining Life: 1 years
Notes:

Improvement:

Purchase Year
1999

Asset: 9-C-PP-1, Control Panel

Size			
Manufacturer/Model			
Hoffman, A673			
Serial Number			
24225-001			
Volts	**Amps**	**HP**	**Speed**
Comments			

Condition Rating: 1
Performance Rating: 3
Standard Useful Life: 20 years
Remaining Life: 0 years
Notes: Pump 1 running light not working.

Improvement: Replace pump 1 running light in kind with new.

Purchase Year
1980 (est)

Pump Station No. 9

Electrical and Power Systems

Asset: 9-E-AS-1, Automatic Transfer Switch

Size
100 amps

Manufacturer/Model
Spectrum Detroit Diesel, RLS-164341-01

Serial Number
K0685465

Volts	Amps	HP	Speed
	100A		

Comments

Condition Rating: 1
Performance Rating: 1
Standard Useful Life: 20 years
Remaining Life: 0 years
Notes: Only 'Auto' and 'Test' controls. No indicating lights.

Improvement:

Purchase Year
1980 (est)

Asset: 9-E-GE-1, Standby Generator - Diesel

Size
45 kW

Manufacturer/Model
Spectrum Detroit Diesel, 4SGS

Serial Number
654901

Volts	Amps	HP	Speed

Comments

Condition Rating: 2
Performance Rating: 1
Standard Useful Life: 25 years
Remaining Life: 7 years
Notes: Conduits eroded. Local natural gas tank not installed.

Improvement: Provide local natural gas tank for standby generator, as required by the NEC. (NEC Article 700.12(B)(3))

Purchase Year
2000 (nameplate)

Pump Station No. 9

Instrumentation / Controls

Asset: 9-C-LE-1, Bubbler Level System

Size	
Manufacturer/Model	
Serial Number	
Volts	**Amps**
Comments	

Condition Rating: 1
Performance Rating: 1
Standard Useful Life: 15 years
Remaining Life: 0 years
Notes: Staff would like back-up level float switches.

Improvement: Provide back-up level float switches.

Purchase Year
1980 (est)

Asset: 9-C-VE-1, Autodialer

Size	
Manufacturer/Model	
RACO, Verbatim VSS	
Serial Number	
V10197	
Volts	**Amps**
Comments	

Condition Rating: 1
Performance Rating: 1
Standard Useful Life: 20 years
Remaining Life: 0 years
Notes:

Improvement:

Purchase Year
1980 (est)

Pump Station No. 11

Year Originally Constructed	Year of Latest Upgrade
2005	

Address
17300 Cardinal Court

Emergency Generator	Bypass Equipment
On-Site Generator	Bypass Quick-Connects

On-Site Storage Capacity (gal)	Force Main Diameter (inches)
4,289 gal; 25 hours (ADWF)	4

Facility Description

Station serves 13 single-family homes.

Inspection Notes

Operator Concerns

Heavy hatches require 2 people to open and create loud noises when cars drive over them. CVSan staff would like these replaced with hatches one person can open and that dampen the traffic noise.

Recommended Site Improvements

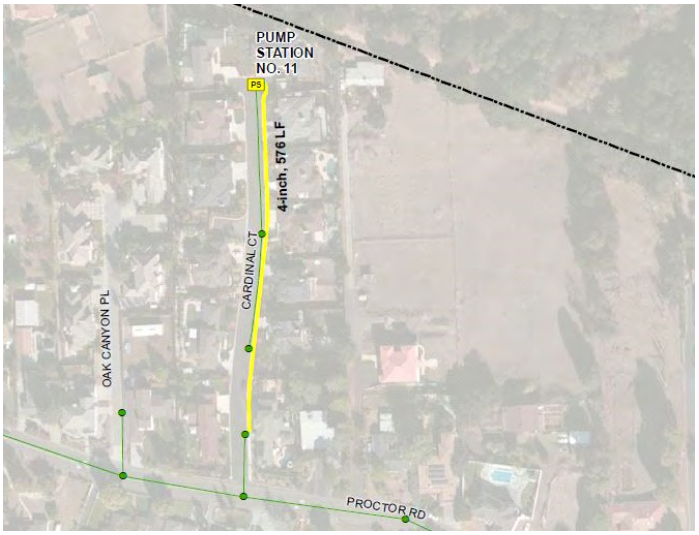

Pump Station No. 11

Condition Rating Index:
1 - Excellent
2 - Slight Visible Degradation
3 - Visible Degradation
4 - Integrity Moderately Compromised
5 - Integrity Severely Compromised

Performance Rating Index:
1 - Functioning as Intended
2 - In Service, High OM Costs
3 - In Service, Function Impaired
4 - In Service, Function Highly Impaired
5 - Not Functioning as Intended

Site / Civil

Asset: 11-B-PI-1-WY, Bypass Piping

Size / Material	Condition Rating: -
4 inch	Performance Rating: -
Purchase Year	Standard Useful Life: 50 years
2005 (Operator)	Remaining Life: 37 years
Comments	Notes:
	Improvement:

Asset: 11-B-QC-1, Coupling for Bypass
Subcomponent to: 11-B-PI-1-WY

Size/Material	Volts/Amps/HP/Speed	Purchase Year
4 inch		2005 (Operator)

Manufacturer/Model	Condition Rating: 2
Victaulic, 31	Performance Rating: 1
Serial Number	Standard Useful Life: 20 years
	Remaining Life: 7 years
Comment Field	Notes:
	Improvement:

Pump Station No. 11

Site / Civil

Asset: 11-B-QC-2, Coupling for Bypass
Subcomponent to: 11-B-PI-1-WY

Size/Material	Volts/Amps/HP/Speed	Purchase Year
4 inch		2005 (Operator)

Manufacturer/Model
Victaulic, 31

Serial Number

Comment Field

Condition Rating: 2
Performance Rating: 1
Standard Useful Life: 20 years
Remaining Life: 7 years
Notes:

Improvement:

Asset: 11-B-QC-5-WY, Coupling for Bypass
Subcomponent to: 11-B-PI-1-WY

Size/Material	Volts/Amps/HP/Speed	Purchase Year
4 inch		2005 (Operator)

Manufacturer/Model
Victaulic, 31

Serial Number

Comment Field

Condition Rating: 2
Performance Rating: 1
Standard Useful Life: 20 years
Remaining Life: 7 years
Notes:

Improvement:

Asset: 11-B-VA-1, Knife Valve for Bypass
Subcomponent to: 11-B-PI-1-WY

Size/Material	Volts/Amps/HP/Speed	Purchase Year
4 inch		2005 (Operator)

Manufacturer/Model
AC Valve, 76-4

Serial Number
360-225-8003

Comment Field

Condition Rating: 2
Performance Rating: 1
Standard Useful Life: 30 years
Remaining Life: 17 years
Notes:

Improvement:

Pump Station No. 11

Site / Civil

Asset: 11-B-VA-2, Knife Valve for Bypass
Subcomponent to: 11-B-PI-1-WY

Size/Material	Volts/Amps/HP/Speed	Purchase Year
4 inch		2005 (Operator)

Manufacturer/Model
AC Valve, 76-4

Serial Number
360-225-8003

Comment Field

Condition Rating: 2
Performance Rating: 1
Standard Useful Life: 30 years
Remaining Life: 17 years
Notes:

Improvement:

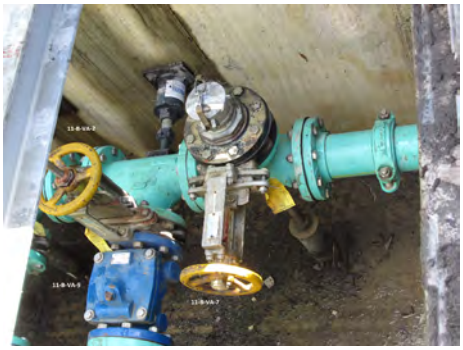

Asset: 11-B-VA-3, Knife Valve for Bypass
Subcomponent to: 11-B-PI-1-WY

Size/Material	Volts/Amps/HP/Speed	Purchase Year
4 inch		2005 (Operator)

Manufacturer/Model
AC Valve, 76-4

Serial Number
360-225-8003

Comment Field

Condition Rating: 2
Performance Rating: 1
Standard Useful Life: 30 years
Remaining Life: 17 years
Notes:

Improvement:

Asset: 11-B-VA-4, Knife Valve for Bypass
Subcomponent to: 11-B-PI-1-WY

Size/Material	Volts/Amps/HP/Speed	Purchase Year
4 inch		2005 (Operator)

Manufacturer/Model
AC Valve, 76-4

Serial Number
360-225-8003

Comment Field

Condition Rating: 2
Performance Rating: 1
Standard Useful Life: 30 years
Remaining Life: 17 years
Notes:

Improvement:

Pump Station No. 11

Site / Civil

Asset: 11-B-VA-5, Knife Valve for Bypass
Subcomponent to: 11-B-PI-1-WY

Size/Material	Volts/Amps/HP/Speed	Purchase Year
4 inch		2005 (Operator)

Manufacturer/Model
AC Valve, 76-4

Serial Number
360-225-8003

Comment Field

Condition Rating: 2
Performance Rating: 1
Standard Useful Life: 30 years
Remaining Life: 17 years
Notes:

Improvement:

Asset: 11-B-VA-6, Knife Valve for Bypass
Subcomponent to: 11-B-PI-1-WY

Size/Material	Volts/Amps/HP/Speed	Purchase Year
4 inch		2005 (Operator)

Manufacturer/Model
AC Valve, 76-4

Serial Number
360-225-8003

Comment Field

Condition Rating: 2
Performance Rating: 1
Standard Useful Life: 30 years
Remaining Life: 17 years
Notes:

Improvement:

Asset: 11-B-VA-7, Knife Valve for Bypass
Subcomponent to: 11-B-PI-1-WY

Size/Material	Volts/Amps/HP/Speed	Purchase Year
4 inch		2005 (Operator)

Manufacturer/Model
AC Valve, 76-4

Serial Number
360-225-8003

Comment Field

Condition Rating: 2
Performance Rating: 1
Standard Useful Life: 30 years
Remaining Life: 17 years
Notes:

Improvement:

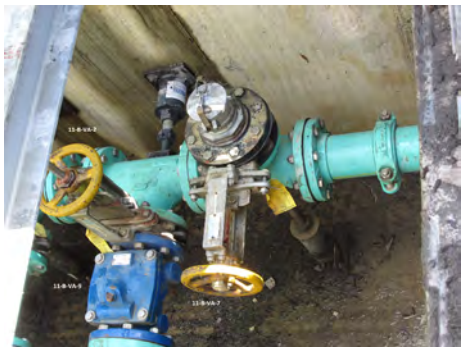

Pump Station No. 11

Site / Civil

Asset: 11-M-DR-1-WY, Trench Drain

Size / Material	Condition Rating: 1
Cast Iron	Performance Rating: 1
Purchase Year	Standard Useful Life: 50 years
2005 (Operator)	Remaining Life: 37 years
Comments	Notes:
Drain prevents runoff from street from entering vaults.	Improvement:

Asset: 11-M-PI-1-WY, Force Main Piping

Size / Material	Condition Rating: 2
4 inch	Performance Rating: 1
Purchase Year	Standard Useful Life: 50 years
2005 (Operator)	Remaining Life: 37 years
Comments	Notes: Corrosion on flanges
	Improvement: Recoat

Pump Station No. 11

Structural / Architectural

Asset: 11-M-VT-1-WY, Valve Vault

Size / Material
6 x 8 sq ft, Concrete

Manufacturer/Model

Serial Number

Comments

Condition Rating 2
Performance Rating: 1
Standard Useful Life: 40 years
Remaining Life: 27 years
Notes: Debris/dirt in bottom

Improvement:

Purchase Year
2005 (Operator)

Asset: 11-M-HA-1-WY, Valve Vault Hatch
Subcomponent to: 11-M-VT-1-WY

Size/Material
6 x 8 sq ft, Aluminum

Manufacturer/Model

Serial Number

Comment Field

Volts/Amps/HP/Speed

Condition Rating: 1
Performance Rating: 1
Standard Useful Life: 20 years
Remaining Life: 7 years
Notes:

Improvement: Replace with Bilco aluminum spring-assisted hatch with safety grates. May be able to reduce the size of the hatch opening.

Purchase Year
2005 (Operator)

Asset: 11-R-EN-1-WY, Structure Enclosing Electrical Cabinet & Generator

Size / Material
208 sq ft, CMU with Stone Facade

Manufacturer/Model

Serial Number

Comments
Roof material is metal.

Condition Rating 1
Performance Rating: 1
Standard Useful Life: 50 years
Remaining Life: 37 years
Notes:

Improvement:

Purchase Year
2005 (Operator)

Pump Station No. 11

Structural / Architectural

Asset: 11-W-GL-1-WY, Wet Well

Size / Material
7 ft, Concrete with T-Lock Liner

Manufacturer/Model

Serial Number

Comments

Condition Rating 2
Performance Rating: 1
Standard Useful Life: 40 years
Remaining Life: 27 years
Notes: Wet well interior is dirty and should be flushed. Concrete collar is spalling.

Improvement:

Purchase Year
2005 (Operator)

Asset: 11-W-HA-1-WY, Wet Well Hatch
Subcomponent to: 11-W-GL-1-WY

Size/Material
42 x 54 sq inches, Steel

Manufacturer/Model

Serial Number

Comment Field

Volts/Amps/HP/Speed

Condition Rating: 2
Performance Rating: 1
Standard Useful Life: 20 years
Remaining Life: 7 years
Notes: Paint peeling on safety grates. Very Heavy.
Improvement: Replace with Bilco aluminum spring-assisted hatch with safety grates.

Purchase Year
2005 (Operator)

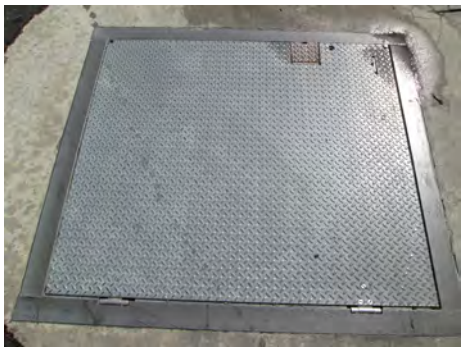

Pump Station No. 11

Mechanical Systems

Asset: 11-W-PU-1, Submersible Pump 1

Size/Material	Volts/Amps/HP/Speed	Purchase Year
8 hp		2005 (Operator)

Manufacturer/Model
Flygt

Serial Number

Comments

Duty (gpm) / Duty (TDH)
125 gpm, 55 ft

Condition Rating: 2
Performance Rating: 1
Standard Useful Life: 20 years
Remaining Life: 7 years
Notes:

Improvement:

Asset: 11-B-QC-3, Coupling for Force Main - Pump 1
Subcomponent to: 11-W-PU-1

Size/Material	Volts/Amps/HP/Speed	Purchase Year
4 inch		2005 (Operator)

Manufacturer/Model
Victaulic, 31

Serial Number

Comment Field

Condition Rating: 2
Performance Rating: 1
Standard Useful Life: 20 years
Remaining Life: 7 years
Notes:

Improvement:

Asset: 11-B-VA-8, Check Valve for Pump 1
Subcomponent to: 11-W-PU-1

Size/Material	Volts/Amps/HP/Speed	Purchase Year
4 inch		2005 (Operator)

Manufacturer/Model
Val-Matic, 504 A

Serial Number

Comment Field

Condition Rating: 2
Performance Rating: 1
Standard Useful Life: 25 years
Remaining Life: 12 years
Notes:

Improvement:

Pump Station No. 11

Mechanical Systems

Asset: 11-C-SR-1-WY, Starter - Pump 1
Subcomponent to: 11-W-PU-1

Size/Material	Volts/Amps/HP/Speed	Purchase Year
8 hp	27A A, 7.5 hp	2005 (Operator)

Manufacturer/Model
Cutler-Hammer, AN16DN0

Serial Number

Comment Field

Condition Rating: 1
Performance Rating: 1
Standard Useful Life: 15 years
Remaining Life: 2 years
Notes:

Improvement:

Asset: 11-W-MO-1-WY, Motor - Pump 1
Subcomponent to: 11-W-PU-1

Size/Material	Volts/Amps/HP/Speed	Purchase Year
8 hp	460-230 V, 9.6-19 A, 1740 rpm RPM	2005 (Operator)

Manufacturer/Model
Flygt, 3127.090-1960

Serial Number
3127.090-0450144

Comment Field
Curve Code: 489

Condition Rating: 2
Performance Rating: 1
Standard Useful Life: 30 years
Remaining Life: 17 years
Notes:

Improvement:

Pump Station No. 11

Mechanical Systems

Asset: 11-W-PI-1-WY, Discharge Piping in Wet Well - Pump 1
Subcomponent to: 11-W-PU-1

Size/Material	Volts/Amps/HP/Speed	Purchase Year
4 inch, Ductile Iron		2005 (Operator)

Manufacturer/Model

Serial Number

Comment Field

Condition Rating: 2
Performance Rating: 1
Standard Useful Life: 50 years
Remaining Life: 37 years
Notes: Corrosion on flanges

Improvement: Recoat

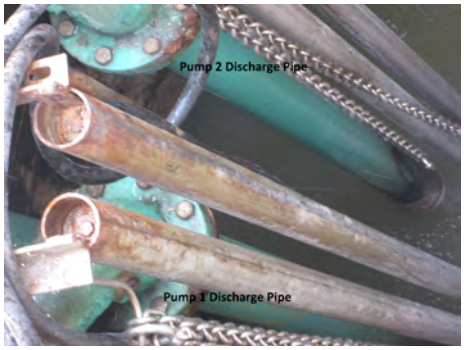

Pump Station No. 11

Mechanical Systems

Asset: 11-W-PU-2, Submersible Pump 2

Size/Material	Volts/Amps/HP/Speed	Purchase Year
8 hp		2005 (Operator)
Manufacturer/Model	**Duty (gpm) / Duty (TDH)**	
Flygt	125 gpm, 55 ft	
Serial Number	**Condition Rating:** 2	
	Performance Rating: 1	
Comments	**Standard Useful Life:** 20 years	
	Remaining Life: 7 years	
	Notes:	
	Improvement:	

Asset: 11-B-QC-4, Coupling for Force Main - Pump 2
Subcomponent to: 11-W-PU-2

Size/Material	Volts/Amps/HP/Speed	Purchase Year
4 inch		2005 (Operator)
Manufacturer/Model	**Condition Rating:** 2	
Victaulic, 31	**Performance Rating:** 1	
Serial Number	**Standard Useful Life:** 20 years	
	Remaining Life: 7 years	
Comment Field	**Notes:**	
	Improvement:	

Asset: 11-B-VA-9, Check Valve for Pump 2
Subcomponent to: 11-W-PU-2

Size/Material	Volts/Amps/HP/Speed	Purchase Year
4 inch		2005 (Operator)
Manufacturer/Model	**Condition Rating:** 2	
Val-Matic, 504 A	**Performance Rating:** 1	
Serial Number	**Standard Useful Life:** 25 years	
	Remaining Life: 12 years	
Comment Field	**Notes:**	
	Improvement:	

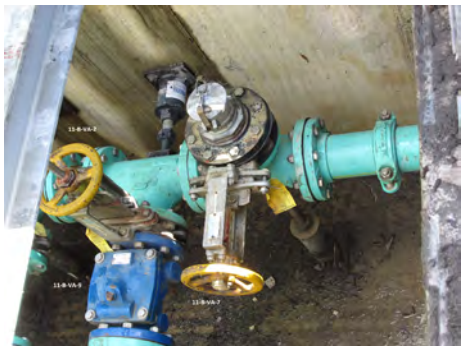

Pump Station No. 11

Mechanical Systems

Asset: 11-C-SR-2-WY, Starter - Pump 2
Subcomponent to: 11-W-PU-2

Size/Material	Volts/Amps/HP/Speed	Purchase Year
8 hp	27A A, 7.5 hp	2005 (Operator)

Manufacturer/Model
Cutler-Hammer, AN16DN0

Serial Number

Comment Field

Condition Rating: 1
Performance Rating: 1
Standard Useful Life: 15 years
Remaining Life: 2 years
Notes:

Improvement:

Asset: 11-W-MO-2-WY, Motor - Pump 2
Subcomponent to: 11-W-PU-2

Size/Material	Volts/Amps/HP/Speed	Purchase Year
8 hp	460-230 V, 9.6-19 A, 1740 rpm RPM	2005 (Operator)

Manufacturer/Model
Flygt, 3127.090-1960

Serial Number
3127.090-0450144

Comment Field
Curve Code: 489

Condition Rating: 2
Performance Rating: 1
Standard Useful Life: 30 years
Remaining Life: 17 years
Notes:

Improvement:

Pump Station No. 11

Mechanical Systems

Asset: 11-W-PI-2-WY, Discharge Piping in Wet Well - Pump 2
Subcomponent to: 11-W-PU-2

Size/Material	Volts/Amps/HP/Speed	Purchase Year
4 inch, Ductile Iron		2005 (Operator)

Manufacturer/Model

Serial Number

Comment Field

Condition Rating: 2
Performance Rating: 1
Standard Useful Life: 50 years
Remaining Life: 37 years
Notes: Corrosion on flanges

Improvement: Recoat

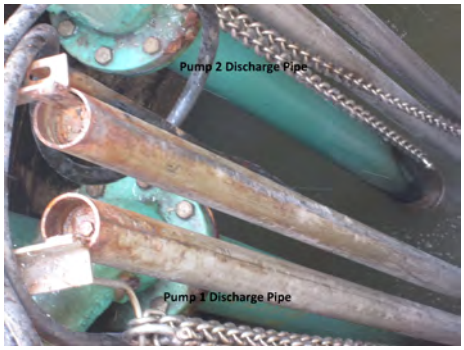

Pump Station No. 11

Electrical and Power Systems

Asset: 11-C-PB-1, Panelboard

Size			
18 Ckts			
Manufacturer/Model			
Eaton , PRL1a			
Serial Number			
Volts	**Amps**	**HP**	**Speed**
120/240V	225A		
Comments			

Condition Rating: 1
Performance Rating: 1
Standard Useful Life: 20 years
Remaining Life: 7 years
Notes:

Improvement:

Purchase Year
2005 (Operator)

Asset: 11-C-PP-1, Control Panel

Size			
Manufacturer/Model			
KBL, 2422-ML-100			
Serial Number			
Volts	**Amps**	**HP**	**Speed**
240V	150A		
Comments			

Condition Rating: 1
Performance Rating: 1
Standard Useful Life: 20 years
Remaining Life: 7 years
Notes:

Improvement:

Purchase Year
2005 (Operator)

Asset: 11-E-AS-1, Automatic Transfer Switch

Size			
100 amps			
Manufacturer/Model			
ASCO, 7000			
Serial Number			
284004FP			
Volts	**Amps**	**HP**	**Speed**
240V	100A		
Comments			

Condition Rating: 1
Performance Rating: 1
Standard Useful Life: 20 years
Remaining Life: 7 years
Notes:

Improvement:

Purchase Year
2005 (Operator)

Pump Station No. 11

Electrical and Power Systems

Asset: 11-E-GE-1, Standby Generator - Natural Gas

Size			
56 kVA			
Manufacturer/Model			
Loadtec, 0DL2-0040.1			
Serial Number			
250037			
Volts	**Amps**	**HP**	**Speed**
120/240V	135A		
Comments			

Condition Rating: 1
Performance Rating: 1
Standard Useful Life: 25 years
Remaining Life: 11 years
Notes: Loadbank installed. Local natural gas tank not installed.

Improvement: Provide local natural gas tank for standby generator, as required by the NEC. (NEC Article 700.12(B)(3))

Purchase Year

2004 (nameplate)

Pump Station No. 11

Instrumentation / Controls

Asset: 11-C-LE-1, Level Transmitter and Sensor

Size	
Manufacturer/Model	
Milltronics, Hydro Ranger 200	
Serial Number	
100804101VU	
Volts	**Amps**
Comments	

Condition Rating: 1
Performance Rating: 1
Standard Useful Life: 15 years
Remaining Life: 2 years
Notes:

Improvement:

Purchase Year
2005 (Operator)

Asset: 11-C-VE-1, Autodialer

Size	
Manufacturer/Model	
RACO, Verbatim VSS	
Serial Number	
15308	
Volts	**Amps**
Comments	

Condition Rating: 1
Performance Rating: 1
Standard Useful Life: 20 years
Remaining Life: 7 years
Notes:

Improvement:

Purchase Year
2005 (Operator)

Asset: 11-W-FL-1, Level Float Switches

Size	
Manufacturer/Model	
Serial Number	
Volts	**Amps**
Comments	

Condition Rating: 1
Performance Rating: 1
Standard Useful Life: 15 years
Remaining Life: 2 years
Notes:

Improvement:

Purchase Year
2005 (Operator)

APPENDIX C

Storage Volume Calculations

Table C-1. Wet Well Storage Volume

Station	Pump On Elevation, ft	Pump Off Elevation, ft	Low Rim Elevation, ft	Wet Well Diameter, ft	Wet Well Storage Depth[a], ft	Wet Well Storage Volume, gal
Pump Station No. 1	-NO DATA-	-NO DATA-	156	4ft x 8ft	*unknown*	*unknown*
Pump Station No. 3[b]	398.5	397.6	404.97	4	6.47	608
Pump Station No. 4	368.28	365.78	376	4	7.72	726
Pump Station No. 5	443	442	456.31	6	13.25	2,802
Pump Station No. 7	365.5	362.5	378.07	6	12.57	2,658
Pump Station No. 8	712.2	708.2	723.39	6	11.19	2,367
Pump Station No. 9	891.1	886.4	902.92	7	11.82	3,403
Pump Station No. 11	465	463.8	479.9	7	14.9	4,289

[a] Storage depth is calculated at the point of failure, when pumps faill to turn on at the Pump On elevation, to the point of overflow at the low rim elevation.

[b] A 9.6 foot datum adjustment factor was applied to the Pump On elevation to adjust the recorded elevation from the datum used in the as-built drawings to the CVSan datum.

Table C-2. On-Site Tank Storage Volume	
Station	Volume, gal (as-built)
Pump Station No. 3	5,000
Pump Station No. 7	23,000
Pump Station No. 8	6,500

Table C-3. Pipe Storage Volume

Pipe ID	USMH	USMH Invert Elev., ft	Pipe Length, ft	Pipe Diameter, in	Storage Volume[(a)], ft^3
Pump Station No. 1					
32-42_32-45	32-42	158.40	126	6	0.00
32-43R_32-44	32-43R	159.60	102	6	0.00
32-44_32-45	32-44	153.20	137	6	26.90
71-26_71-27	71-26	819.06	221	8	0.00
71-27_71-28	71-27	793.01	280	8	0.00
71-29_71-30	71-29	724.30	297	8	0.00
71-30_71-33	71-30	713.75	76	8	0.00
32-46_32-51	32-46	150.00	33.4	8	11.66
32-51_32-50	32-51	146.20	3	8	1.05
71-28_71-29	71-28	756.64	300	8	0.00
32-45_32-46	32-45	151.90	134	8	46.77
				Total Storage Volume	86.38
Pump Station No. 3					
8-18_8-17	8-18	396.03	69	8	24.09
8-17_8-16	8-17	391.00	10	6	1.96
				Total Storage Volume	26.05
Pump Station No. 4					
25-3R_25-4	25-3R	409.50	152	6	0.00
25-7R_25-8	25-7R	434.00	147	6	0.00
25-9R_25-10	25-9R	460.40	45	6	0.00
25-11R_25-12	25-11R	508.00	103	6	0.00
25-2_26-3	25-2	381.50	234	8	0.00
26-67_26-66	26-67	401.70	92	8	0.00
26-66_26-65	26-66	406.10	294	8	0.00
26-46_26-45	26-46	497.20	250	8	0.00
26-45_26-44	26-45	496.80	118	8	0.00
26-47R_26-45	26-47R	496.70	50	8	0.00
25-1_25-2	25-1	386.60	190	8	0.00
25-5R_25-6	25-5R	432.70	152	6	0.00
25-13R_25-14	25-13R	587.00	130	8	0.00
26-44_25-12	26-44	494.90	215	8	0.00
25-14_25-12	25-14	416.20	373	8	0.00
25-12_25-10	25-12	490.30	289	8	0.00
25-10_25-8	25-10	446.00	205	8	0.00
25-8_25-6	25-8	419.10	212	8	0.00
25-6_25-4	25-6	409.80	143	8	0.00
25-4_25-2	25-4	399.20	184	8	0.00
26-1R_26-2	26-1R	412.00	370	6	0.00
26-2_26-65	26-2	382.70	369	8	0.00
26-65_26-3	26-65	372.40	55	8	19.20
26-3_26-4	26-3	368.70	45	8	15.71
				Total Storage Volume	34.91
Pump Station No. 5					
16-7_16-6	8-18	453.00	25	4	2.18
16-8_16-7	8-19	448.00	40	8	13.96
				Total Storage Volume	16.14
Pump Station No. 7					
46-9_46-7	46-9	372.97	55	8	19.20
46-7_PS7	46-7	370.00	53	8	18.50
				Total Storage Volume	37.70
Pump Station No. 8					
71-26_71-27	71-26	819.06	221	8	0.00
71-27_71-28	71-27	793.01	280	8	0.00
71-29_71-30	71-29	724.30	297	8	0.00
71-30_71-33	71-30	713.75	76	8	26.53
71-28_71-29	71-28	756.64	300	8	0.00
				Total Storage Volume	26.53

Table C-3. Pipe Storage Volume

Pipe ID	USMH	USMH Invert Elev., ft	Pipe Length, ft	Pipe Diameter, in	Storage Volume[(a)], ft^3
Pump Station No. 9					
64-4_64-15	64-4	894.70	61	8	21.29
64-15_PS9	64-15	890.76	3	8	1.05
64-1_64-2	64-1	898.90	46	8	16.06
64-2_64-3	64-2	897.90	57	8	19.90
64-3_64-4	64-3	895.80	76	8	26.53
64-5_64-4	64-5	895.90	76	8	26.53
64-6_64-5	64-6	904.50	101	8	0.00
64-7_64-6	64-7	904.50	208	8	0.00
64-8_64-7	64-8	906.70	111	8	0.00
63-44_64-8	63-44	914.90	278	8	0.00
63-43_63-44	63-43	922.80	242	8	0.00
63-42_63-43	63-42	924.50	85	8	0.00
63-45_63-46	63-45	921.90	161	8	0.00
63-46_63-47	63-46	918.80	256	8	0.00
63-47_63-44	63-47	914.90	19	8	0.00
64-9_64-10	64-9	911.00	80	8	0.00
64-10_64-8	64-10	909.80	228	8	0.00
64-16_64-10	64-16	909.00	99	8	0.00
				Total Storage Volume	111.35
Pump Station No. 11					
17-65_16-13	17-65	504.06	185	8	0.00
16-13_PS11	16-13	490.30	242	8	0.00
				Total Storage Volume	0.00

[(a)] Storage volume is zero if the USMH invert elevation is above the lowest rim elevation for the station.

Table C-4. Manhole Storage Volume

Manhole ID	Invert Elevation, ft	Rim Elevation, ft	Lowest Rim Elevation[(a)], ft	Manhole Diameter, ft	Storage Depth, ft	Storage Volume, ft^3
Pump Station No. 1						
32-42	158.4	164.0	156.0	5	0.0	0.0
32-44	153.2	158.2	156.0	5	2.8	55.0
32-45	151.9	157.8	156.0	5	4.1	80.5
71-26	819.1	827.8	156.0	5	0.0	0.0
71-27	793.0	803.3	156.0	5	0.0	0.0
71-28	756.6	769.3	156.0	5	0.0	0.0
71-29	724.3	735.4	156.0	5	0.0	0.0
71-30	713.8	723.4	156.0	5	0.0	0.0
32-46	150.0	156.0	156.0	5	6.0	117.8
71-33	704.9	725.5	156.0	5	0.0	0.0
32-51	146.2	156.2	156.0	5	9.8	192.4
					Total Storage Volume	445.7
Pump Station No. 3						
8-18	396.0	405.0	405.0	5	8.9	175.5
8-17	391.3	406.3	405.0	5	13.7	269.4
					Total Storage Volume	444.9
Pump Station No. 4						
25-1	386.6	391.9	376.0	5	0.0	0.0
25-2	381.5	389.0	376.0	5	0.0	0.0
25-4	399.2	407.2	376.0	5	0.0	0.0
25-6	409.8	416.1	376.0	5	0.0	0.0
25-8	419.1	425.8	376.0	5	0.0	0.0
25-10	446.0	452.0	376.0	5	0.0	0.0
25-12	490.3	495.8	376.0	5	0.0	0.0
25-14	416.2	425.2	376.0	5	0.0	0.0
26-2	382.7	392.0	376.0	5	0.0	0.0
26-3	368.7	376.0	376.0	5	7.3	143.3
26-44	494.9	500.2	376.0	5	0.0	0.0
26-45	496.8	503.8	376.0	5	0.0	0.0
26-46	497.2	504.0	376.0	5	0.0	0.0
26-65	372.4	378.8	376.0	5	3.6	70.7
26-66	406.1	412.2	376.0	5	0.0	0.0
26-67	401.7	411.0	376.0	5	0.0	0.0
25-3R	409.5	420.0	376.0	5	0.0	0.0
25-5R	432.7	436.1	376.0	5	0.0	0.0
25-7R	434.0	442.0	376.0	5	0.0	0.0
25-9R	460.4	464.4	376.0	5	0.0	0.0
25-11R	507.0	512.0	376.0	5	0.0	0.0
25-13R	587.0	593.0	376.0	5	0.0	0.0
26-1R	412.0	417.0	376.0	5	0.0	0.0
26-47R	496.7	501.9	376.0	5	0.0	0.0
					Total Storage Volume	214.0
Pump Station No. 5						
16-8	456.1	456.3	456.3	5	0.2	4.5
16-4	448.1	463.0	456.3	5	8.2	161.0
					Total Storage Volume	165.5
Pump Station No. 7						
46-9	373.0	378.1	378.1	5	5.1	100.1
46-7	370.2	378.7	378.1	5	7.8	154.1
					Total Storage Volume	254.3
Pump Station No. 8						
71-26	819.1	827.8	723.4	5	0.0	0.0
71-27	793.0	803.3	723.4	5	0.0	0.0
71-28	756.6	769.3	723.4	5	0.0	0.0
71-29	724.3	735.4	723.4	5	0.0	0.0
71-30	713.8	723.4	723.4	5	9.6	189.3
					Total Storage Volume	189.3
Pump Station No. 9						
64-5	895.9	905.8	902.9	5	7.0	137.8
64-4	894.7	905.8	902.9	5	8.2	161.4
64-3	895.8	905.2	902.9	5	7.1	139.8
64-2	897.9	906.0	902.9	5	5.0	98.6
64-1	898.9	906.0	902.9	5	4.0	78.9
64-6	904.5	913.8	902.9	5	0.0	0.0
64-7	904.5	913.8	902.9	5	0.0	0.0
64-8	906.7	915.8	902.9	5	0.0	0.0
63-44	914.9	923.0	902.9	5	0.0	0.0
63-43	922.8	929.2	902.9	5	0.0	0.0
63-42	924.5	931.5	902.9	5	0.0	0.0
63-46	918.8	926.2	902.9	5	0.0	0.0
63-45	921.9	929.0	902.9	5	0.0	0.0
63-47	914.9	923.0	902.9	5	0.0	0.0
64-9	911.0	917.5	902.9	5	0.0	0.0
64-16	909.0	918.0	902.9	5	0.0	0.0
64-10	909.8	917.8	902.9	5	0.0	0.0
64-15	890.8	902.9	902.9	5	12.2	238.8
					Total Storage Volume	855.3
Pump Station No. 11						
17-65	504.1	511.5	479.9	5	0.0	0.0
16-13	490.3	496.0	479.9	5	0.0	0.0
					Total Storage Volume	0.0

[(a)] Storage volume is calculated up to the point of overflow within the system, which is assumed at the lowest manhole rim elevation.

APPENDIX D

Rehabilitation and Improvement Projects

Appendix D. Pump Station Rehabilitation and Improvement Projects

Station	Improvement Project	Equipment Cost	Rehabilitation/ Replacement Cost[a]	Total Project Cost
Pump Station No. 1	Safety Improvements			
	-Replace valve vault hatch with Bilco aluminum spring-assisted hatch with safety grates	$2,500	$5,900	$11,800
	-Replace wet well hatch with Bilco aluminum spring-assisted hatch with safety grates	$2,500	$5,900	
	Mechanical Rehabilitation			
	-Replace Pump 2 Gate Valve Actuator	$750	$1,800	$13,500
	-Recoat Pump 1 and Pump 2 check valves and discharge piping	$4,200	$9,100	
	-Recoat exposed forcemain piping and install permanent pipe supports	$1,200	$2,600	
	Structural Rehabiliation			
	-Repair valve vault concrete and coat vault interior	$720	$1,600	$1,600
	Electrical Rehabilitation			
	-Replace non-functioning control panel pilot lights	$500	$1,200	$1,200
	Pump Station No. 1 Total (Remain in place)	**$12,370**	**$28,100**	**$28,100**
	-or-			
	Relocate and replace station			
	-Further discussions needed on design alternatives	TBD	TBD	TBD
	Pump Station No. 1 Total (Replace in New Location)	**TBD**	**TBD**	**TBD**
Pump Station No. 3	Safety Improvements			
	-Install more secure ladder extension poles or Davit cranes	$1,000	$2,400	$2,400
	Electrical and Instrumentation Improvements			
	-Replace existing generator, provide local fuel tank, and relocate disconnect switch	$50,000	$117,500	$122,200
	-Replace level float switches	$2,000	$4,700	
	Pump Station No. 3 Total	**$53,000**	**$124,600**	**$124,600**
Pump Station No. 4	Safety Improvements			
	-Install more secure ladder extension poles or Davit cranes	$1,000	$2,400	$2,400
	Electrical and Instrumentation Improvements			
	-Replace existing generator, provide local fuel tank, and relocate disconnect switch	$50,000	$117,500	$122,200
	-Replace level float switches	$2,000	$4,700	
	Pump Station No. 4 Total	**$53,000**	**$124,600**	**$124,600**
Pump Station No. 5	Mechanical Rehabilitation			
	-Replace Pump 2 Gate Valve Actuator	$750	$1,800	$2,800
	-Recoat exposed bypass piping	$450	$1,000	
	Electrical and Instrumentation Improvements			
	-Replace existing portable generator connection and wiring	$500	$1,200	$10,600
	-Replace level float switches	$2,000	$4,700	
	-Replace Pump 1 motor wires	$2,000	$4,700	
	Pump Station No. 5 Total	**$5,700**	**$13,400**	**$13,400**
Pump Station No. 7	Reliability and Safety Upgrades			
	-Add bypass connection	$11,500	$24,800	$37,700
	-Add automatic reset of autodialer	$500	$1,100	
	-Replace valve vault hatch with Bilco aluminum sprin-assisted hatch with safety grates	$2,500	$5,900	
	-Replace wet well hatch with Bilco aluminum spring-assisted hatch with safety grates	$2,500	$5,900	
	Electrical and Instrumentation Improvements			
	-Replace bubbler system with ultrasonic level sensor and connect to future SCADA. Provide back-up level float switches	$5,000	$11,800	$206,900
	-Replace control panel and components	$30,000	$70,500	
	-Replace existing generator and provide local fuel tank.	$50,000	$117,500	
	-Replace automatic transfer switch	$3,000	$7,100	
	Mechanical Rehabilitation			
	-Replace Pump 1 and Pump 2 isolation valves	$3,000	$7,100	$36,300
	-Recoat Pump 1 and Pump 2 discharge piping	$1,200	$2,600	
	-Replace force main air valve and redirect drain to wet well	$1,300	$3,100	
	-Replace monorail with truck crane	$10,000	$23,500	
	Structural Rehabiliation			
	-Recoat wet well	$2,850	$6,200	$6,200
	Pump Station No. 7 Total	**$123,350**	**$287,100**	**$287,100**
Pump Station No. 8	Reliability and Safety Upgrades			
	-Replace valve vault hatch with Bilco aluminum spring-assisted hatch with safety grates	$2,500	$5,900	$42,500
	-Replace wet well hatch with Bilco aluminum spring-assisted hatch with safety grates	$2,500	$5,900	
	-Replace ARV vault hatch with Bilco aluminum spring-assisted hatch with safety grates	$2,500	$5,900	
	-Add bypass connection	$11,500	$24,800	
	Mechanical Rehabilitation			
	-Recoat Pump 1 and Pump 2 discharge piping	$600	$1,300	$1,800
	-Remove air valve located on bypass	$200	$500	
	Structural Rehabilitation			
	-Inspect storage tank with CCTV to assess rehabilitation needs	$2,500	$5,400	$9,700
	-Cut and chemically treat roots and install wet well liner	$2,000	$4,300	
	Electrical and Instrumentation Improvements			
	-Provide local fuel tank for generator	$3,600	$8,500	$27,400
	-Replace control panel brekaers	$3,000	$7,100	
	-Provide back-up level float switches	$5,000	$11,800	
	Pump Station No. 8 Total	**$35,900**	**$81,400**	**$81,400**

Appendix D. Pump Station Rehabilitation and Improvement Projects

Station	Improvement Project	Equipment Cost	Rehabilitation/ Replacement Cost[a]	Total Project Cost
Pump Station No. 9	Safety Upgrades			
	-Replace valve vault hatch with Bilco aluminum spring-assisted hatch with safety grates	$2,500	$5,900	$18,000
	-Replace overflow connection vault hatch with Bilco aluminum spring-assisted hatch with safety grates	$2,500	$5,900	
	-Replace wet well hatch with Bilco aluminum spring-assisted hatch with safety grates	$2,500	$5,900	
	-Add lag bolts to secure fence	$100	$300	
	Mechanical Rehabilitation (long term - 5 to 10 years)			
	-Replace Pump 1 and Pump 2 discharge piping and appurtenances	$4,310	$10,200	$10,200
	Structural Rehabilitation			
	-Repair manhole concrete, coat, and replace frame/collar/cover	$6,500	$14,000	$14,000
	Electrical and Instrumentation Improvements			
	-Replace bubbler system with ultrasonic level sensor and connect to future SCADA. Provide back-up level float switches	$5,000	$11,800	$21,500
	-Replace Pump 1 running light	$500	$1,200	
	-Provide local fuel tank for generator	$3,600	$8,500	
	Pump Station No. 9 Total	**$27,510**	**$63,700**	**$63,700**
Pump Station No. 11	Safety Upgrades			
	-Replace valve vault hatch with Bilco aluminum spring-assisted hatch with safety grates	$2,500	$5,900	$11,800
	-Replace wet well hatch with Bilco aluminum spring-assisted hatch with safety grates	$2,500	$5,900	
	Electrical and Instrumentation Improvements			
	-Provide local fuel tank for generator	$3,600	$8,500	$8,500
	Mechanical Rehabilitation (long term - 5 to 10 years)			
	-Recoat Pump 1 and Pump 2 discharge piping and exposed force main piping	$1,000	$2,200	$2,200
	Pump Station No. 11 Total	**$9,600**	**$22,500**	**$22,500**
All Stations	Safety Upgrades			
	-Add Fall Protection Anchors	$12,800	$30,100	$30,100
	All Stations Total	**$12,800**	**$30,100**	**$30,100**
	Program Total	**$333,230**	**$775,500**	**$775,500**

[a] Replacement costs include 35% for administrative, legal, engineering, and construction management costs; 50% for construction and installation costs; a 30% construction contingency; and 20% for overhead and profit.

Rehabilitation costs include 35% for administrative, legal, engineering, and construction management costs; 50% for construction and installation costs; 10% for removal of existing; and 20% for overhead and profit

WEST YOST ASSOCIATES

(THIS PAGE INTENTIONALLY LEFT BLANK)

APPENDIX I

Pump Station Maintenance Log

lucity

Home | Work Orders - Full

Work Order #	Statu...	Cat...	Main Task	Lead Worker	Status	Project	Start Date	End Date	Reason	Last Modified By
20-000970	05/28/2020	WWLS	QUARTERLY PUMP STATION MAINTENANCE	YZ	New Work Order				SCHEDULED MAINTENANCE	PG

Locations (0) | Tasks (3) | Assets (1) | Checklist (24) | Events (0) | Tracking (1) | Resulting Tasks (0)

Seq No	Task Text	Task Start Date	Task End Date	Status Text	Unit of Measure ...	Calc'd Unit Cost	# of Units	Lock Units	Total Cost	Unit Cost	Task Crew Text	Task S...
1	QUARTERLY PUM				Hours	0	0	☐	0	0	CREW 3_TECH	GREG WILLIAM
3	WASH DOWN				Hours	0	0	☐	0	0	CREW 3_TECH	GREG WILLIAM
5	VAC-DOWN				Hours	0	0	☐	0	0	CREW 1_MAINTENANCE	GREG WILLIAM

Employees (2) | Materials (0) | Fluids (0) | Equipment (2) | Contractors (0)

Resource	Resource Text	Alt Description	Department Text	Class	Group Number	Unit of Measure Text	Override Unit Cost	Units	Time Cost Text	Unit Cost	Total Cost
LLL	LEON LIM		Wastewater			Hours		0	REGULAR TIME	36	0
YZ	YIHAO ZHONG		Wastewater			Hours		0	REGULAR TIME	66.75	0

lucity

Home | Work Orders - Full

Work Order #	Statu...	Cat...	Main Task	Lead Worker	Status	Project	Start Date	End Date	Reason
20-000970	05/28/2020	WWLS	QUARTERLY PUMP STATION MAINTENANCE	YZ	New Work Order				SCHEDU

Locations (0) | Tasks (3) | Assets (1) | Checklist (24) | Events (0) | Tracking (1) | Resulting Tasks (0)

Line Number	Checklist	Completed	Condition Text	Completion Date	Completion Time	Est Completion Date	Note
1	Pull and inspect pumps (seperate work orders.)	☐					
2	Pull and inspect pumps.	☐					
3	Check electrical system condition.	☐					
4	Check electrical system condition.	☐					
5	Generator battery test	☐					
6	Generator battery test	☐					
7	Wash down wet well	☐					

1 2 3 10 items per page

lucity

Home | Work Orders - Full | Work Orders - Full Form

Work Order #: 20-000970

Category *: WWLS Lift Station

Status *: 2 New Work Order

Problem:

Status Date: 5/28/2020

Status Time: 07:54 AM

Main Task *: QPSM QUARTERLY PUMP STATION MAINTENANCE

Work Order

Asset: PS07 PUMP STATION NO. 7

Location: PS

Comment From Request:

Cause:

Assigned Crew *: C3 CREW 3_TECH

Supervisor *: GW GREG WILLIAMS

Assigned By: GW GREG WILLIAMS

Lead Worker: YZ YIHAO ZHONG

Assigned Date:

Assigned Time:

Priority: 3 30 DAYS

Start Date:

Start Time:

Account #:

End Date:

End Time:

Proj No - Acct:

Project Text:

Reason *: 201 SCHEDULED MAINTENA

Overrides

- [ ] Problem
- [ ] Overdue
- [ ] Leadworker
- [ ] Task
- [ ] Supervisor
- [ ] Hard Lock WO

Location

This address is the First Location on the Work Order. If you change the values, it will add a new location when you Save, then it will continue showing the first location.

Address: 6100

Street Name: VILLAREAL DR

Street Name 2:

Department: WW Wastewater

Division: CSM Collection System Maintenance

Sub-Division:

Area:

Sub-Area:

Owner:

Location:

Classification:

Comment to Crew:

Work Order Number: 20-000970

5/28/2020
2:03 PM

Category:	Lift Station	**Priority:**	30 DAYS
Problem:		**Crew:**	CREW 3_TECH
Cause:		**Supervisor:**	GREG WILLIAMS
Main Task:	QUARTERLY PUMP STATION MAINTENANCE	**Status:**	New Work Order
Work Order Start Date/Time:		**Work Order End Date/Time:**	

Location (s)

6100 VILLAREAL DR

Comments for Crew

CHECKLIST

Comp.	Item	Condition
☐	Pull and inspect pumps (seperate work orders.)	
☐	Pull and inspect pumps.	
☐	Check electrical system condition.	
☐	Check electrical system condition.	
☐	Generator battery test	
☐	Generator battery test	
☐	Wash down wet well.	
☐	Wash down wet well.	
☐	Vac down wet well (if needed).	
☐	Vac down wet well (if needed).	
☐	Test pump operation cycle (if level in station permits)	
☐	Pump HOA switch set to: (AUTO)	
☐	Record pump 1 runtime	
☐	Record pump 2 runtime	
☐	Record generator run hours	
☐	Record electrical service meter reading	
☐	Check generator (fluids, belts, hoses)	
☐	Generator run test (set to AUTO)	
☐	Exercise generator transfer switch	
☐	Auto dialer test	
☐	Check wet well condition	
☐	Check building condition (outside)	
☐	Check building condition (inside)	
☐	Check pump station property (fences, landscaping, sidewalk/driveway)	

Task Start Date/Time: **Task End Date/Time:**

Task Code: VD **Task Description:** VAC-DOWN

Employee Number	Employee Name	Time Type Req	OT	Normal	Type	Units
YZ	YIHAO ZHONG	0.00	0.00	0.00	REGULAR TIME	Hours

Equipment Code	Equipment Description	Units
HJ1	08 HYDRO-JETTER	0.00
HV2	2017 VAC-CON	0.00

Material Code	Material Description	Units

Fluid Code	Fluid Description	Units

Task Start Date/Time: _____ **Task End Date/Time:** _____

Task Code: WD **Task Description:** WASH DOWN

Employee Number	Employee Name	Time Type Req	OT	Normal	Type	Units
YZ	YIHAO ZHONG	0.00	0.00	0.00	REGULAR TIME	Hours
LLL	LEON LIM	0.00	0.00	0.00	REGULAR TIME	Hours

Equipment Code	Equipment Description	Units
HJ1	08 HYDRO-JETTER	0.00
T3	03 WORK TRUCK	0.00

Material Code	Material Description	Units

Fluid Code	Fluid Description	Units

Task Start Date/Time: _____ **Task End Date/Time:** _____

Task Code: QPSM **Task Description:** QUARTERLY PUMP STATION MAINTENANCE

Employee Number	Employee Name	Time Type Req	OT	Normal	Type	Units
YZ	YIHAO ZHONG	0.00	0.00	0.00	REGULAR TIME	Hours
LLL	LEON LIM	0.00	0.00	0.00	REGULAR TIME	Hours

Equipment Code	Equipment Description	Units
HJ1	08 HYDRO-JETTER	0.00
T3	03 WORK TRUCK	0.00

Material Code	Material Description	Units

Fluid Code	Fluid Description	Units

Asset List (Sewer Pump Stations)

Station ID / Structure	Station Name / Type	Address / Capacity	Completion Date
PS07	PUMP STATION NO. 7 PS	6100 VILLAREAL DR 300.00	

1 Pump Stations

(THIS PAGE INTENTIONALLY LEFT BLANK)

APPENDIX J

10-Year Capital Improvement Plan

CASTRO VALLEY SANITARY DISTRICT
DRAFT 10 YEAR CAPITAL IMPROVEMENT PROJECT PLAN

Capital Improvements - CIP	21/22	22/23	23/24	24/25	25/26	26/27	27/28	28/29	29/30	30/31
Oro Loma Treatment Plan Capital Improvement	1,617,878	2,067,750	850,770	1,790,910	2,393,655	384,365	1,909,925	835,690	109,910	95,250
CVSan Operations and Engineering Building	1,500,000	3,500,000	13,100,000	-	-	-	-	-	-	-
WASTEWATER COLLECTION										
Wastewater Vehicles	215,000	182,000	50,000	7,500	50,000	75,000	50,000	75,000	50,000	75,000
Miscellaneous Collection System Equipment	50,000	25,000	25,000	25,000	25,000	25,000	25,000	25,000	25,000	25,000
Emergency Bypass System Equipment	50,000	50,000	50,000		50,000		50,000		50,000	
Gravity Sewer Rehabilitation & Replacement	1,500,000	150,000	2,000,000	2,000,000	250,000	2,500,000	2,500,000	3,000,000	250,000	3,000,000
Flume Rehabilitation and Upgrade						50,000				
Pump Station Condition Assessment & Rehabilitation	500,000			500,000		250,000		250,000		
Force Main Condition Assessment & Rehabilitation	100,000			150,000	1,000,000	75,000	350,000			
Aerial Pipeline Condition Assessment & Upgrade			500,000				400,000		250,000	
Trunk Sewer Capacity Projects	350,000									
I/I Reduction & Proactive Replacement	1,000,000		50,000	150,000	1,500,000	100,000	1,000,000	100,000	1,500,000	150,000
TOTAL WASTEWATER COLLECTION	**3,765,000**	**407,000**	**2,675,000**	**2,832,500**	**2,875,000**	**3,075,000**	**4,375,000**	**3,450,000**	**2,125,000**	**3,250,000**
TOTAL CVSAN CAPITAL PROJECTS (INCLUDING OLSD)	**6,882,878**	**5,974,750**	**16,625,770**	**4,623,410**	**5,268,655**	**3,459,365**	**6,284,925**	**4,285,690**	**2,234,910**	**3,345,250**

(THIS PAGE INTENTIONALLY LEFT BLANK)

APPENDIX K

Training Schedule

Castro Valley Sanitary District
2022 Safety Training Schedule

See Kyle for details on the training schedule below. Any item stating "MSO – Annual refresher" in the Notes column must be scanned to My Safety Officer.

Safety Meeting Date	Agency Program Name	Training Description	Freq. (months)	Training Format	Notes	Department(s)	Trainer (Staff Name)
1st Qtr. 2022							
Thursday, January 6 (Staff Mtg)	COVID-19 Prevention Program	COVID-19 Prevention Program P&P 3009	12	Classroom Hands on Tailgate Computer Based Training Video	CVSan – Optional Training.	All	Kyle
Wednesday, January 12	Hearing Conservation	Hearing Conservation Awareness	12	Classroom Hands on Tailgate Computer Based Training Video	MSO - Annual refresher	Collections Engineering	Garrick
Wednesday, January 26	Forklift Safety	Forklift Authorization	12	Classroom AND Hands on	MSO - Annual refresher	Collections	Greg
Thursday, February 3 (Staff Mtg)	Poison Oak	Poison Oak Awareness	12	Classroom	CVSan – Optional Training	All	Garrick
Wednesday, February 9	Respiratory Protection Program	Respiratory Protection Awareness Training	12	Classroom Hands on Training Video	MSO - Annual refresher	Collections Zero Waste	Jordan
Thursday, March 3 (Teambuilding)	Fire Prevention Plan	Fire Prevention Plan & Fire Extinguishers (Portable)	12	Classroom Hands on Tailgate Computer Based Training Video	MSO – Annual Refresher Required for Fire Extinguishers; Fire Prevention Plan – NEO.	All	Emmanuel
Wednesday, March 9	Confined Space	Confined Space Entrant/ Attendant Training	12	Classroom	MSO – Annual Refresher	Collections Engineering	Lorenzo
Wednesday, March 23	Confined Space	Confined Space Entry Supervisor Training	12	Classroom	MSO – Annual Refresher	Collections Engineering	Kevin
2nd Qtr. 2022							
Thursday, April 7 (Staff Mtg)	Emergency Action Plan	Emergency Action Plan Training	12	Classroom Hands on Tailgate Computer Based Training Video	MSO – NEO. CVSan – Annual Refresher Required Per Policy	All	Jordan

Wednesday, April 13	Electrical Safety Low Voltage	Electrical Safety Qualified Persons	36	Classroom	Recommended that "qualified" persons should receive refresher training every three years but can be more often.	Collections Engineering	Jeff
Wednesday, April 27	Heat Illness	Heat Illness	12	Classroom Hands on Tailgate Computer Based Training Video	MSO - Annual refresher recommended.	Collections Engineering Zero Waste	Evan
Thursday, May 5 (Staff Mtg)	Driver Safety	Driving Safety Training	12	Tailgate	CVSan – Optional Training	All	Naomi
Wednesday, May 11	Confined Space	Confined Space Non-Entry Rescue Review	12	Hands on **AND** Classroom	MSO - Annual refresher.	Collections Engineering	Gilbert
Thursday, May 25	Fall Protection	Fall Protection: Operations Level Training	12	Classroom Hands on Computer Based Training Video	MSO – Annual refresher recommended	Collections Engineering	Greg
Thursday, June 2 (Teambuilding)	Back Safety Repetitive Motion Injuries	Back Safety	12	Classroom	CVSan – Optional Training	All	Purvi
Wednesday, June 8	Asbestos Cement Pipe	Asbestos	12	Tailgate	CVSan – Optional Training	Collections Engineering	Kyle
Wednesday, June 22	Excavation/ Trenching/ Shoring	Excavation Competent Person Training	12	Classroom	MSO - Annual reminder that competent persons are recommended to re-trained every three years.	Collections Engineering	Garrick
3rd Qtr. 2022							
Thursday, July 7 (Staff Mtg)	Injury & Illness Prevention	Injury & Illness Prevention P&P 3010	12	Classroom	MSO – NEO CVSan – Optional, Highly Recommended	All	Żaneta
Wednesday, July 13	DOT – Drug/Alcohol	Substance Abuse Program for Drivers	12	Tailgate	CVSan – Optional Training	Collections Engineering	Kevin
Wednesday, July 27	Underground Marking and Locating	Underground Marking and Locating Training	12	Classroom	USA Requirement	Collections Engineering	Matthew
Thursday, August 4 (Staff Mtg)	Crisis Communication & Business Continuity Plans	Plan Review	N/A	Classroom	CVSan – Optional Training	All	Mike

Wednesday, August 10	Workplace Eye Safety	Workplace Eye Safety	12	Tailgate	CVSan – Optional Training	Collections Engineering	Evan
Wednesday, August 24	Lockout/Tagout	Lockout/Tagout Training for Authorized Employees	12	Classroom Hands on	MSO – Annual refresher	Collections	Jeff
Thursday, September 1 (Teambuilding)	Office Safety	Office Safety	12	Classroom	CVSan – Optional Training	All	Anna
Wednesday, September 14	Noise Induced Hearing Loss	Noise Induced Hearing Loss	12	Tailgate	CVSan – Optional Training	Collections Engineering	Matthew
Wednesday, September 28	Sewer Overflows and Backups	Sewer Overflows and Backups Training	24	Classroom Hands on	Refresher Recommended every two years but can be more often.	Collections Engineering	Lorenzo
4th Qtr. 2022							
Thursday, October 6 (Staff Mtg)	Bloodborne Pathogens (20 min.)	Bloodborne Pathogens	12	Classroom Computer Based Training Video	MSO - Annual refresher required.	All	Efren
Thursday October 6 (Staff Mtg)	Earthquake/ Evacuation Drill (10 min.)	Earthquake Preparedness & Great CA ShakeOut Drill	12	Classroom Hands on	CVSan – Annual refresher & drill	All	Safety Committee
Wednesday, October 12	Confined Space	Confined Space Entry Rescue Practice	12	Classroom Hands on	MSO – Annual refresher required.	Collections	Gilbert
Wednesday, October 26	Hazardous Waste Management	Hazardous Waste Management	12	Classroom Hands on Computer Based Training Video	MSO – Annual refresher required per Title 22.	Collections Zero Waste	Phil
Thursday, November 3 (Staff Mtg)	Workplace Violence	Workplace Violence	12	Classroom	CVSan – Optional Training	All	Stacy
Wednesday, November 9	HAZWOPER	First Responders Awareness (FRA)	12	Classroom Hands on Computer Based Training Video	MSO – Annual refresher required.	Collections Zero Waste	Phil
Thursday, December 1 (Teambuilding)	Shelter-in-Place	Shelter-in-Place	12	Classroom	CVSan – Optional Training	All	Cole
Wednesday, December 14	Zoonotic Awareness	Zoonotic Disease Prevention	12	Classroom Hands on Tailgate Computer Based Video	MSO - Annual refresher required.	Collections Engineering	Greg

<u>Safety Events Required:</u>
Evacuation Drill – 12 months – All Departments – Not Scheduled

(THIS PAGE INTENTIONALLY LEFT BLANK)

APPENDIX L

Equipment and Vehicle Inventory

Appendix L1: Maintenance Equipment List and Replacement Parts		
Name of Item	Item No.	Qty

Appendix L2: Castro Valley Sanitary District Vehicle List

Vehicle ID	Vehicle Description	Vehicle Category	Year	Make	Model	License Plate	Primary Use
HJ1	08 HYDRO-JETTER	Heavy-duty Truck	2008	Ford	F550	1249625	O&M
HV2	18 HYDRO-VAC	Heavy-duty Truck	2018	Peterbuilt	PB348	1526482	O&M
HV1	03 HYDRO-VAC	Heavy-duty Truck	2003	Sterling	L7501	1159699	O&M
MR2	20 MACHINE RODDER TRUCK	Heavy-duty Truck	2020	Ford	F550		O&M
R1	11 WORK TRUCK	Light-duty Truck	2011	Ford	Ranger	1360661	O&M
T3	03 WORK TRUCK	Light-duty Truck	2003	Ford	F250	1137108	O&M
T4	04 WORK TRUCK	Light-duty Truck	2004	Ford	F250	1172759	O&M
T5	11 UTILITY TRUCK	Light-duty Truck	2011	Ford	F250	1343368	O&M
T6	14 UTILITY TRUCK	Light-duty Truck	2014	Ford	F-150	1449499	O&M
T7	14 UTILITY TRUCK	Light-duty Truck	2014	Ford	F150	1449497	O&M
T8	14 UTILITY TRUCK	Light-duty Truck	2014	Ford	F150	1449498	O&M
E1	08 ESCAPE	Passenger SUV	2008	Ford	Escape	1236947	Transport
E2	09 ESCAPE	Passenger SUV	2009	Ford	Escape	1322945	Transport
I1	11 INSIGHT	Small Passenger Car	2011	Honda	Insight	1367916	Transport
P1	01 PRIUS	Small Passenger Car	2001	Toyota	Prius	1082882	Transport
V1	06 TVI VAN	Van	2006	Chevrolet	Express	1197296	O&M
TR2	Confined Space Entry Trailer	Trailer	n/a	n/a	n/a	1200474	O&M
TR1	Emergency respond trailer (ERT)	Trailer	n/a	BigTex Trailer Mfg.	n/a	329363	O&M
TR3	Arrow board (1)	Traffic Control	n/a	n/a	n/a	SE537187	O&M
TR5	Arrow board (2)	Traffic Control	n/a	n/a	n/a	n/a	O&M
TR4	Godwin Pump	Emergency Response	n/a	n/a	n/a	n/a	O&M
FL1	Forklift	Material Handler	2008	Yale	n/a	n/a	O&M

(THIS PAGE INTENTIONALLY LEFT BLANK)

APPENDIX M

Spill Emergency Response Plan – Field Packet

SSO Response Flow Chart

Sanitary Sewer Overflow Report

Spill Volume Estimation & San Diego Manhole Spill Rate Chart

Water Quality Sampling Field Data Form

Spill Warning Sign

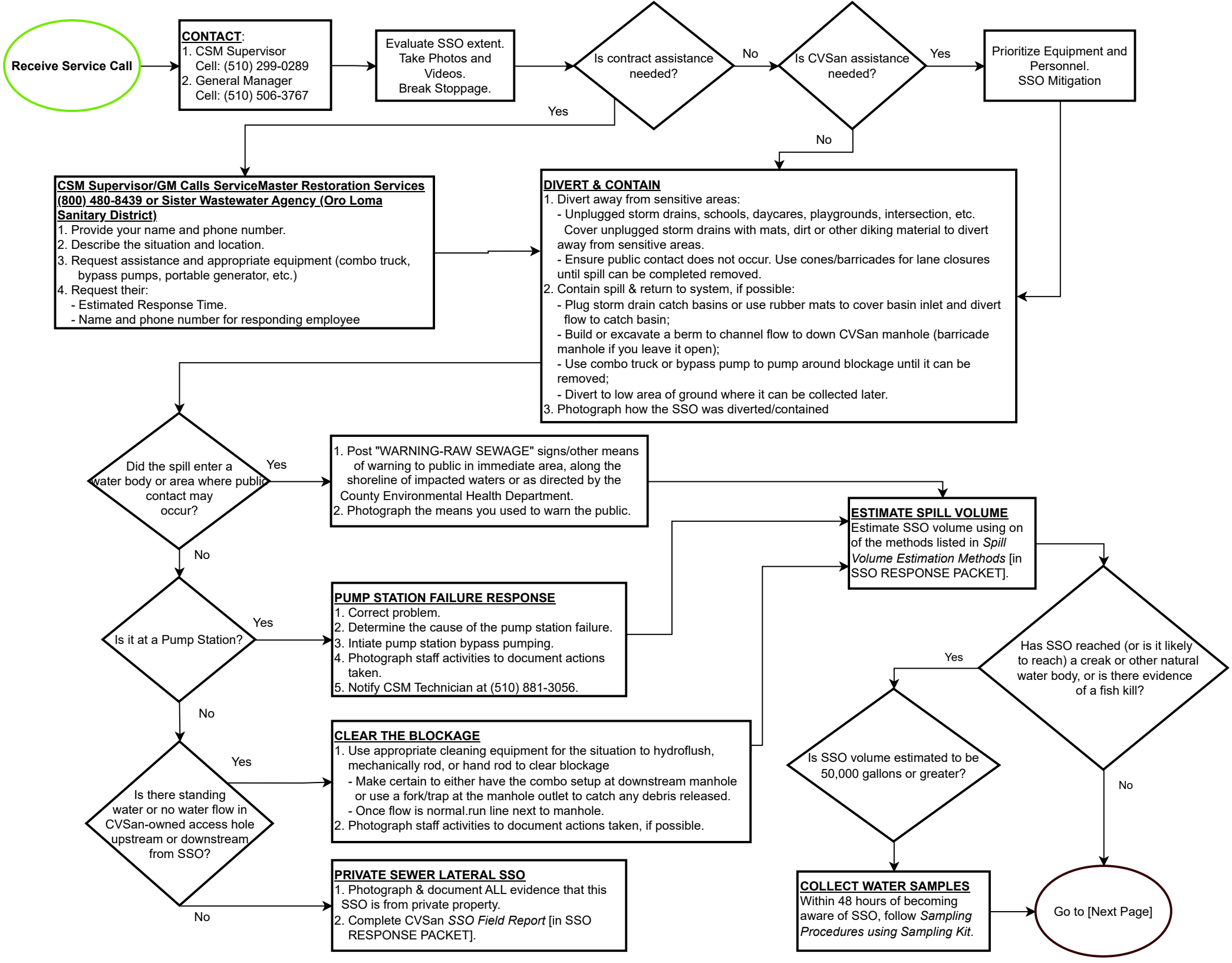
Receive Service Call
CONTACT:
1. CSM Supervisor
Cell: (510) 299-0289
2. General Manager
Cell: (510) 506-3767
Evaluate SSO extent. Take Photos and Videos. Break Stoppage.
Is contract assistance needed?
No
Is CVSan assistance needed?
Yes
Prioritize Equipment and Personnel. SSO Mitigation
Yes
No
CSM Supervisor/GM Calls ServiceMaster Restoration Services (800) 480-8439 or Sister Wastewater Agency (Oro Loma Sanitary District)
1. Provide your name and phone number.
2. Describe the situation and location.
3. Request assistance and appropriate equipment (combo truck, bypass pumps, portable generator, etc.)
4. Request their:
- Estimated Response Time.
- Name and phone number for responding employee
DIVERT & CONTAIN
1. Divert away from sensitive areas:
- Unplugged storm drains, schools, daycares, playgrounds, intersection, etc. Cover unplugged storm drains with mats, dirt or other diking material to divert away from sensitive areas.
- Ensure public contact does not occur. Use cones/barricades for lane closures until spill can be completed removed.
2. Contain spill & return to system, if possible:
- Plug storm drain catch basins or use rubber mats to cover basin inlet and divert flow to catch basin;
- Build or excavate a berm to channel flow to down CVSan manhole (barricade manhole if you leave it open);
- Use combo truck or bypass pump to pump around blockage until it can be removed;
- Divert to low area of ground where it can be collected later.
3. Photograph how the SSO was diverted/contained
Did the spill enter a water body or area where public contact may occur?
Yes
1. Post "WARNING-RAW SEWAGE" signs/other means of warning to public in immediate area, along the shoreline of impacted waters or as directed by the County Environmental Health Department.
2. Photograph the means you used to warn the public.
No
Is it at a Pump Station?
Yes
PUMP STATION FAILURE RESPONSE
1. Correct problem.
2. Determine the cause of the pump station failure.
3. Intiate pump station bypass pumping.
4. Photograph staff activities to document actions taken.
5. Notify CSM Technician at (510) 881-3056.
No
Is there standing water or no water flow in CVSan-owned access hole upstream or downstream from SSO?
Yes
CLEAR THE BLOCKAGE
1. Use appropriate cleaning equipment for the situation to hydroflush, mechanically rod, or hand rod to clear blockage
- Make certain to either have the combo setup at downstream manhole or use a fork/trap at the manhole outlet to catch any debris released.
- Once flow is normal.run line next to manhole.
2. Photograph staff activities to document actions taken, if possible.
No
PRIVATE SEWER LATERAL SSO
1. Photograph & document ALL evidence that this SSO is from private property.
2. Complete CVSan SSO Field Report [in SSO RESPONSE PACKET].
ESTIMATE SPILL VOLUME
Estimate SSO volume using on of the methods listed in Spill Volume Estimation Methods [in SSO RESPONSE PACKET].
Has SSO reached (or is it likely to reach) a creek or other natural water body, or is there evidence of a fish kill?
Yes
Is SSO volume estimated to be 50,000 gallons or greater?
No
COLLECT WATER SAMPLES
Within 48 hours of becoming aware of SSO, follow Sampling Procedures using Sampling Kit.
Go to [Next Page]

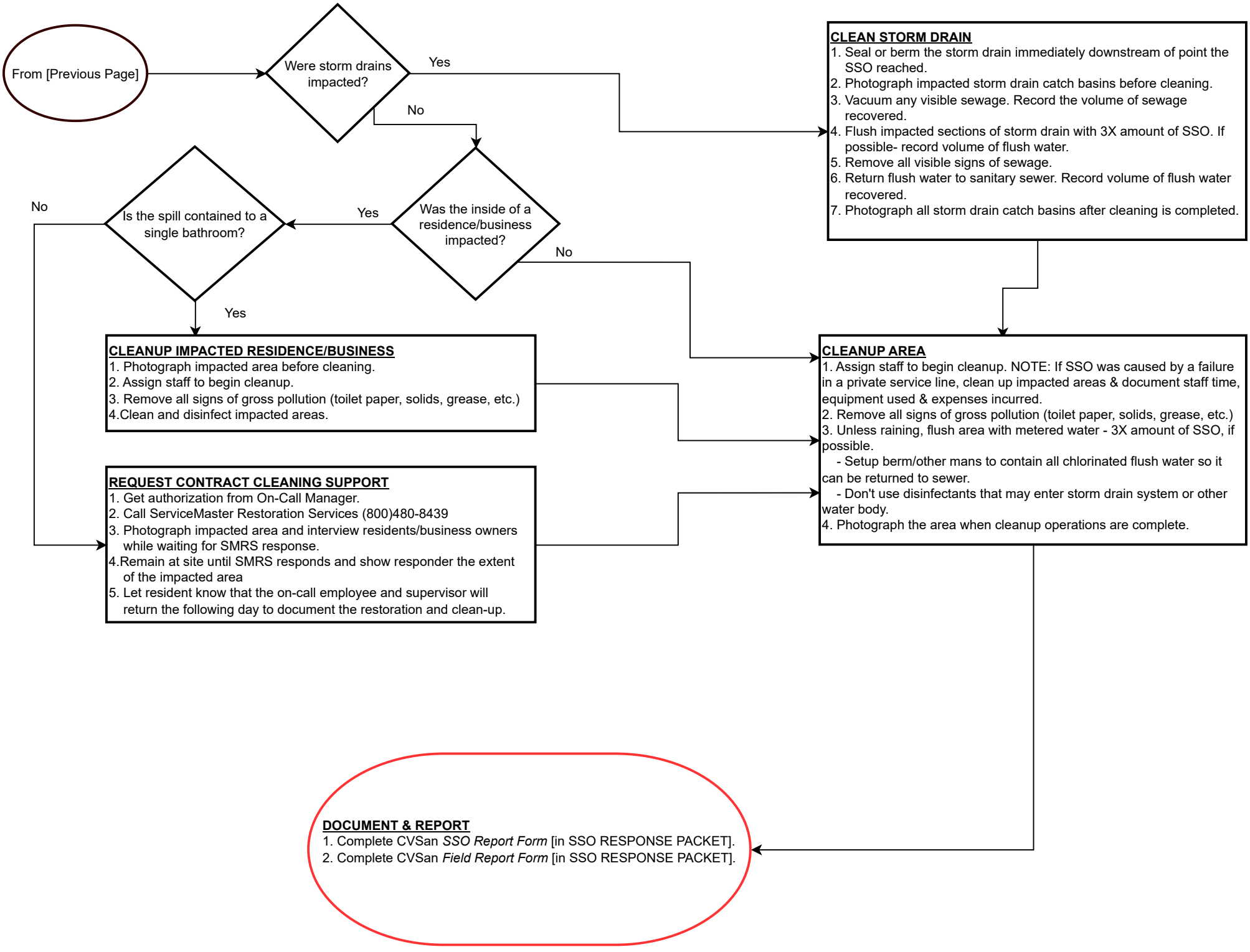
From [Previous Page]
Were storm drains impacted?
Yes
No
CLEAN STORM DRAIN
1. Seal or berm the storm drain immediately downstream of point the SSO reached.
2. Photograph impacted storm drain catch basins before cleaning.
3. Vacuum any visible sewage. Record the volume of sewage recovered.
4. Flush impacted sections of storm drain with 3X amount of SSO. If possible- record volume of flush water.
5. Remove all visible signs of sewage.
6. Return flush water to sanitary sewer. Record volume of flush water recovered.
7. Photograph all storm drain catch basins after cleaning is completed.
Was the inside of a residence/business impacted?
Yes
No
Is the spill contained to a single bathroom?
No
Yes
CLEANUP IMPACTED RESIDENCE/BUSINESS
1. Photograph impacted area before cleaning.
2. Assign staff to begin cleanup.
3. Remove all signs of gross pollution (toilet paper, solids, grease, etc.)
4.Clean and disinfect impacted areas.
REQUEST CONTRACT CLEANING SUPPORT
1. Get authorization from On-Call Manager.
2. Call ServiceMaster Restoration Services (800)480-8439
3. Photograph impacted area and interview residents/business owners while waiting for SMRS response.
4.Remain at site until SMRS responds and show responder the extent of the impacted area
5. Let resident know that the on-call employee and supervisor will return the following day to document the restoration and clean-up.
CLEANUP AREA
1. Assign staff to begin cleanup. NOTE: If SSO was caused by a failure in a private service line, clean up impacted areas & document staff time, equipment used & expenses incurred.
2. Remove all signs of gross pollution (toilet paper, solids, grease, etc.)
3. Unless raining, flush area with metered water - 3X amount of SSO, if possible.
- Setup berm/other mans to contain all chlorinated flush water so it can be returned to sewer.
- Don't use disinfectants that may enter storm drain system or other water body.
4. Photograph the area when cleanup operations are complete.
DOCUMENT & REPORT
1. Complete CVSan SSO Report Form [in SSO RESPONSE PACKET].
2. Complete CVSan Field Report Form [in SSO RESPONSE PACKET].

lucity

Home | SSOs | Sewer Overflows CSM Form

Overflow Rec #: 0

Alt ID *

Status

Document Available

Confirmed

Locked

Last Modified By

Last Modified Date

Info Receipt

Received

Time Received

Reported By

Taken By

Reported Phone

Location

Address

Street Name

Street Name2

Location

Zip Code

Parcel Number

Overflow Start

Overflow Start Time

Overflow Source

Overflow End

Overflow End Time

Second Source

Reported As

Third Source

Investigation

Investigator

Primary Cause

Invest. Phone

Secondary Cause

Investig. Start

Investig. Start Time

Est. GPM

Est. Minutes

Est. Gallons

Total OF Est

Incident Comment

Response Comment

lucity

Home | Sewer Overflows CSM Form

Cleanup

Cleaning Crew

Clean Crew Arriv.

Clean Crew Arriv Tim

Contain Meth 1

Contain Meth 2

Contain Meth 3

Cleaning Meth 1

Cleaning Meth 2

Cleaning Finished

Cleaning Finished Ti

Disposal

Gal. Recovered

- [ ] Sign Posted
- [ ] Barricaded
- [ ] Samples Taken
- [ ] Notified Public
- [ ] Hurt Fish/Wildlife

Cleanup Comments

Affected Assets 1

- [ ] Major Waterway
- [ ] Watershed
- [ ] Lake/Pond
- [ ] Groundwater
- [ ] Minor Waterway
- [ ] Storm Drain
- [ ] Culvert
- [ ] Other Surf. Water

Soil Cleanup

Soil Saturation

Init WW Affected

Sec WW Affected

Final Overfl Dest

lucity

Home | Sewer Overflows CSM Form

Review

Last TV Date

Last Maint Date

Last Maint Type

Cond at Maint

Prev Act Taken

72hr Rainfall

Future Prevention

Needed Sys Impr

Reason

Est Cost incurred

Overflow Cause

Review Comments

Notification

Rep Agency 1

Reported to 1

Date Reported 1

Time Reported 1

Rep Method 1

Rep Agency 2

Reported to 2

Date Reported 2

Time Reported 2

Rep Method 2

Rep Agency 3

Reported to 3

Date Reported 3

Time Reported 3

Rep Method 3

Dept Health Not.

OES Notified

Contam Warning

Warning Duration

A variety of approaches exist for estimating the volume of a sanitary sewer spill. This appendix documents the three methods that are most often employed. The person preparing the estimate should use the method most appropriate to the sewer overflow in question and use the best information available.

1. Method I: Eyeball Estimate

The volume of small spills can be estimated using an "eyeball estimate". To use this method imagine the amount of water that would spill from a bucket or a barrel. A bucket contains 5 gallons and a barrel contains 50 gallons. If the spill is larger than 50 gallons, try to break the standing water into barrels and then multiply by 50 gallons. This method is useful for contained spills up to approximately 200 gallons.

2. Method II: Measured Volume

The volume of most small spills that have been contained can be estimated using this method. The shape, dimensions, and the depth of the contained wastewater are needed. The shape and dimensions are used to calculate the area of the spills and the depth is used to calculate the volume.

Step 1: Sketch the shape of the contained sewage.

Step 2: Measure or pace off the dimensions.

Step 3: Measure the depth at several locations and select an average.

Step 4: Convert the dimensions, including depth, to feet.

Step 5: Calculate the area in square feet using the following formulas:

Rectangle: Area = length (feet) x width (feet)

Circle: Area = diameter (feet) x diameter (feet) x 3.14 x .25

Triangle: Area = base (feet) x height (feet) x 0.5

Step 6: Multiply the area (square feet) times the depth (in feet) to obtain the volume in cubic feet.

Step 7: Multiply the volume in cubic feet by 7.5 to convert it to gallons

Figure 1: Common Shapes and Dimensions

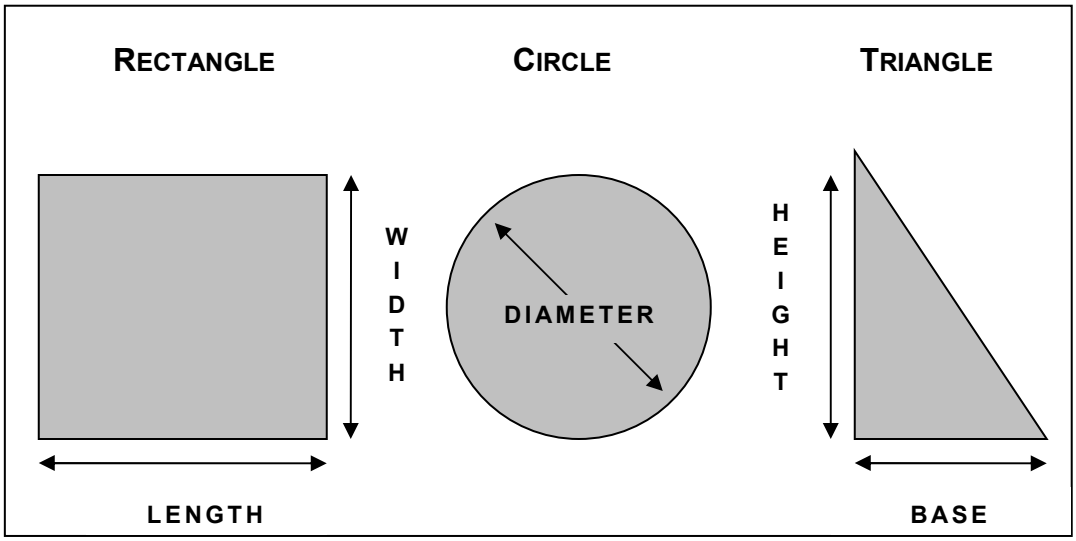

3. Method III: Duration and Flowrate

Calculating the volume of larger spills, where it is difficult or impossible to measure the area and depth, requires a different approach. In this method, the separate estimates are made of the duration of the spill and the flowrate. The methods of estimating duration and flowrate are:

Duration: The duration is the elapsed time from the time the spill started to the time that the flow was restored.

Start time: The start time is sometimes difficult to establish. Here are some approaches:

- Local residents can be used to establish start time. Inquire as to their observations. Spills that occur in rights-of-way are usually observed and reported promptly. Spills that occur out of the public view can go on longer. Sometimes observations like odors or sounds (*e.g.,* water running in a normally dry creek bed) can be used to estimate the start time.
- Changes in flow on a downstream flow meter can be used to establish the start time. Typically the daily flow peaks are "cut off" or flattened by the loss of flow. This can be identified by comparing hourly flow data during the spill event with flow data from prior days.
- Conditions at the spill site change over time. Initially there will be limited deposits of toilet paper and other sewage solids. After a few days to a week, the sewage solids form a light-colored residue. After a few weeks to a month, the sewage solids turn dark. The quantity of toilet paper and other materials of sewage origin increase over time. These observations can be used to estimate the start time in the absence of other information. Taking photographs to document the observations can be helpful if questions arise later in the process.

- It is important to remember that spills may not be continuous. Blockages are not usually complete (some flow continues). In this case the spill would occur during the peak flow periods (typically 10:00 to 12:00 and 13:00 to 16:00 each day). Spills that occur due to peak flows in excess of capacity will occur only during, and for a short period after, heavy rainfall.

End time: The end time is usually much easier to establish. Field crews on-site observe the "blow down" that occurs when the blockage has been removed. The "blow down" can also be observed in downstream flow meters.

Flow Rate: The flowrate is the average flow that left the sewer system during the time of the spill. There are three common ways to estimate the flowrate:

- The San Diego Manhole Flowrate Chart: This chart, included below, shows sewage flowing from manhole covers at a variety of flowrates. The observations of the field crew can be used to select the appropriate flowrate from the chart. If possible, photographs are useful in documenting basis for the flowrate estimate.
- Flow meter: Changes in flows in downstream flow meters can be used to estimate the flowrate during the spill.
- Counting Connections: Once the location of the spill is known, the number of upstream connections can be determined from the sewer maps. Multiply the number of connections by 200 to 250 gallons per day per connection or 8 to 10 gallons per hour per connection.

  For example: 22 upstream connections x 9 gallons per hour per connection

  = 198 gallons per hour / 60 minutes per hour

  = 3.3 gallons per minute

Spill Volume: Once duration and flowrate have been estimated, the volume of the spill is the product of the duration in hours or days and the flowrate in gallons per hour or gallons per day.

For example:

Spill start time = 11:00

Spill end time = 14:00

Spill duration = 3 hours

3.3 gallons per minute X 3 hours X 60 minutes per hour

= 594 gallons

Manhole Overflow Flowrate Guide

City of San Diego
Metropolitan Wastewater Department

Reference Sheet for Estimating Sewer Spills from Overflowing Sewer Manholes

All estimates are calculated in gallons per minute (gpm)

Wastewater Collection Division
(619) 654-4160

5 gpm

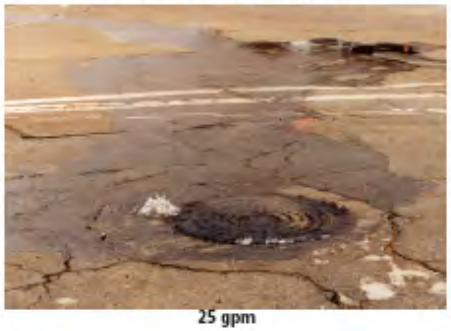
25 gpm

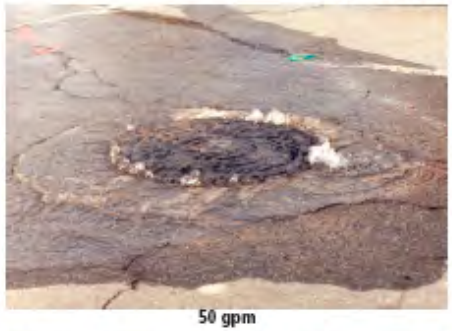
50 gpm

100 gpm

150 gpm

200 gpm

225 gpm

250 gpm

275 gpm

All photos were taken during a demonstration using metered water from a hydrant in cooperation with the City of San Diego's Water Department.

rev. 4/99

OES Control No: _____

CIWQS SSO ID: _____

Staff Initial _____

Water Quality Sampling Field Data Form

SSO START TIME – STOP TIME INFORMATION

Estimated SSO start Time: _____:_____ ☐ AM ☐ PM Date: _____/_____/_____

Estimated SSO end Time: _____:_____ ☐ AM ☐ PM Date: _____/_____/_____

1. Did SSO discharge to a stream, creek, and/or other surface water? ☐ Yes ☐ No
2. Was there a discharge to a storm drain, drainage channel, and/or surface water that was **NOT fully captured and returned to the wastewater collection system?** ☐ Yes ☐ No

Affected creek/stream name: _____

Affected watershed name: _____

County: _____ **State:** _____

Latitude: _____ **Longitude:** _____

Approximate size (or distance) of affected area (*ft*^{2} *or mi.*): _____

Sample site of affected area (description):

_____

_____

_____

Map page: _____

SAMPLING INFORMATION

Time _____:_____ ☐ AM ☐ PM Date: _____/_____/_____

Sample ID No.	Sample Type	Container No.	Field Analysis Type	Field Analysis Measurement	Sample Temp. (°F)

Past (24-hour) weather:	Current weather:	Forecast (24-hour) weather:
☐ Heavy rain	☐ Heavy rain	☐ Heavy rain
☐ Light rain	☐ Light rain	☐ Light rain
☐ No rain	☐ No rain	☐ No rain
☐ Other: _____	☐ Other: _____	☐ Other: _____

WARNING

SEWAGE SPILL
AREA CLOSED
NO ENTRY

Contaminated Water

DO NOT ingest, wade, swim,
fish or come into contact.

Keep children and pets
out of the area.

Questions concerning exposure, posting and
clean-up should be directed to:

Castro Valley Sanitary District

(510) 537-0757

Monday through Friday 7:00 AM – 4:00 PM

(510) 506-5821

After Hours

(THIS PAGE INTENTIONALLY LEFT BLANK)

APPENDIX N

Spill Emergency Response Plan – Management Packet

SSO Reporting Chart

Sanitary Sewer Overflow Report

Spill Volume Estimation & San Diego Manhole Spill Rate Chart

Water Quality Sampling Field Data Form

State of California Water Resource Control Board Order No. WQ 2013-0058-EXEC

Creek Protection: Emergency Environmental and Waterways Permits

Lake or Streambed Alteration Program – Information Regarding Emergency Work

Lake or Streambed Alteration Program – Notification of Emergency Work

CEQA Article 18. Statutory Exemptions (Sections 15260 to 15285)

Electronic Code of Federal Regulations (Title 20: Protection of Environment, Part 401 General Provisions)

Field Sampling Kit

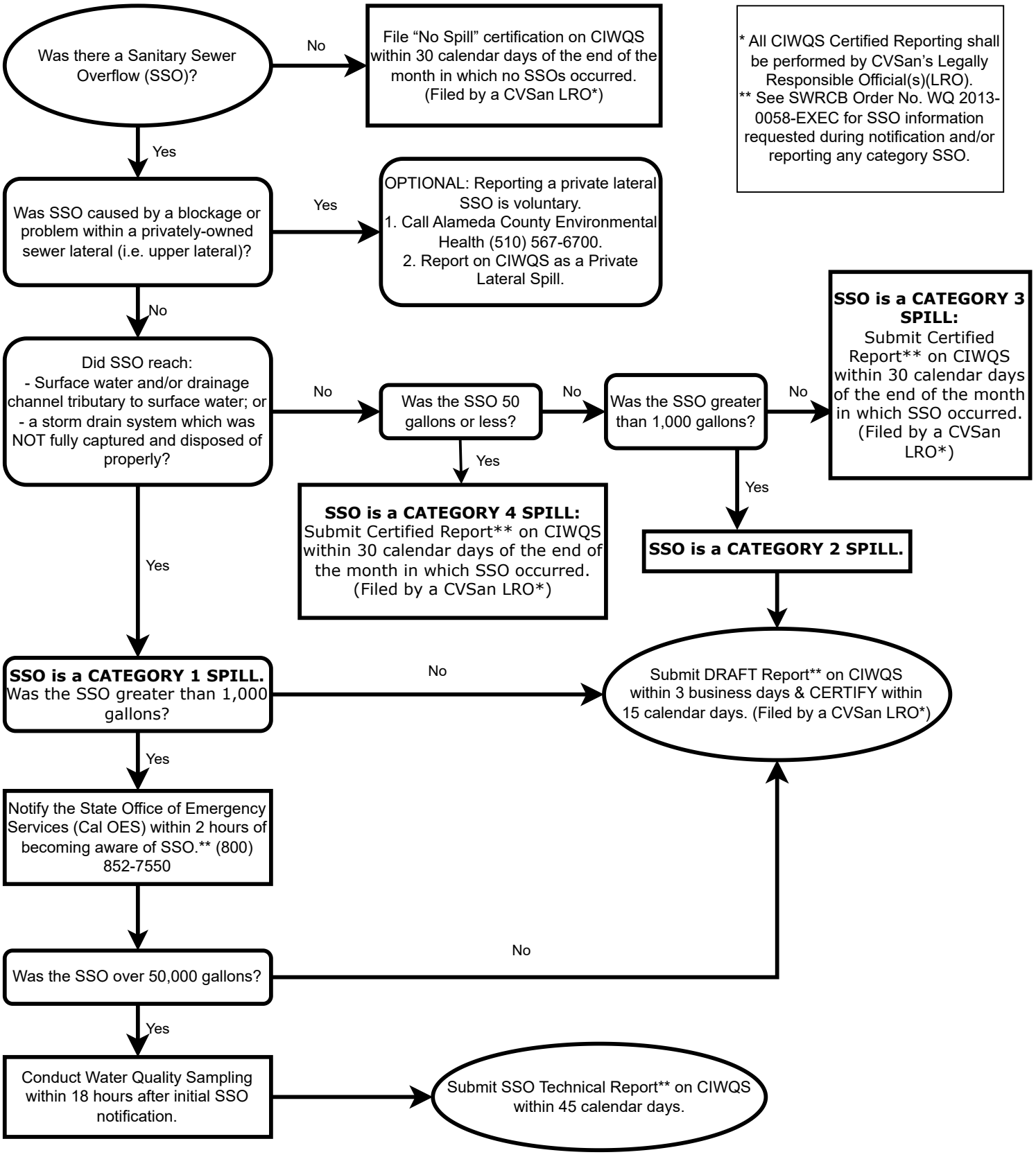
Was there a Sanitary Sewer Overflow (SSO)?
No
File "No Spill" certification on CIWQS within 30 calendar days of the end of the month in which no SSOs occurred. (Filed by a CVSan LRO*)
* All CIWQS Certified Reporting shall be performed by CVSan's Legally Responsible Official(s)(LRO).
** See SWRCB Order No. WQ 2013-0058-EXEC for SSO information requested during notification and/or reporting any category SSO.
Yes
Was SSO caused by a blockage or problem within a privately-owned sewer lateral (i.e. upper lateral)?
Yes
OPTIONAL: Reporting a private lateral SSO is voluntary.
1. Call Alameda County Environmental Health (510) 567-6700.
2. Report on CIWQS as a Private Lateral Spill.
No
Did SSO reach:
- Surface water and/or drainage channel tributary to surface water; or
- a storm drain system which was NOT fully captured and disposed of properly?
No
Was the SSO 50 gallons or less?
No
Was the SSO greater than 1,000 gallons?
No
SSO is a CATEGORY 3 SPILL:
Submit Certified Report** on CIWQS within 30 calendar days of the end of the month in which SSO occurred. (Filed by a CVSan LRO*)
Yes
SSO is a CATEGORY 4 SPILL:
Submit Certified Report** on CIWQS within 30 calendar days of the end of the month in which SSO occurred. (Filed by a CVSan LRO*)
Yes
SSO is a CATEGORY 2 SPILL.
Yes
SSO is a CATEGORY 1 SPILL.
Was the SSO greater than 1,000 gallons?
No
Submit DRAFT Report** on CIWQS within 3 business days & CERTIFY within 15 calendar days. (Filed by a CVSan LRO*)
Yes
Notify the State Office of Emergency Services (Cal OES) within 2 hours of becoming aware of SSO.** (800) 852-7550
Was the SSO over 50,000 gallons?
No
Yes
Conduct Water Quality Sampling within 18 hours after initial SSO notification.
Submit SSO Technical Report** on CIWQS within 45 calendar days.

lucity

Home | SSOs | Sewer Overflows CSM Form

Overflow Rec #: 0

Alt ID *

Status

Document Available

Confirmed

Locked

Last Modified By

Last Modified Date

Info Receipt

Received

Time Received

Reported By

Taken By

Reported Phone

Location

Address

Street Name

Street Name2

Location

Zip Code

Parcel Number

Overflow Start

Overflow Start Time

Overflow Source

Overflow End

Overflow End Time

Second Source

Reported As

Third Source

Investigation

Investigator

Primary Cause

Invest. Phone

Secondary Cause

Investig. Start

Investig. Start Time

Est. GPM

Est. Minutes

Est. Gallons

Total OF Est

Incident Comment

Response Comment

lucity

Home | Sewer Overflows CSM Form

Cleanup

Cleaning Crew

Clean Crew Arriv.

Clean Crew Arriv Tim

Contain Meth 1

Contain Meth 2

Contain Meth 3

Cleaning Meth 1

Cleaning Meth 2

Cleaning Finished

Cleaning Finished Ti

Disposal

Gal. Recovered

- [ ] Sign Posted
- [ ] Barricaded
- [ ] Samples Taken
- [ ] Notified Public
- [ ] Hurt Fish/Wildlife

Cleanup Comments

Affected Assets 1

- [ ] Major Waterway
- [ ] Watershed
- [ ] Lake/Pond
- [ ] Groundwater
- [ ] Minor Waterway
- [ ] Storm Drain
- [ ] Culvert
- [ ] Other Surf. Water

Soil Cleanup

Soil Saturation

Init WW Affected

Sec WW Affected

Final Overfl Dest

lucity

Home | Sewer Overflows CSM Form

Review

Last TV Date

Last Maint Date

Last Maint Type

Cond at Maint

Prev Act Taken

72hr Rainfall

Future Prevention

Needed Sys Impr

Reason

Est Cost incurred

Overflow Cause

Review Comments

Notification

Rep Agency 1

Reported to 1

Date Reported 1

Time Reported 1

Rep Method 1

Rep Agency 2

Reported to 2

Date Reported 2

Time Reported 2

Rep Method 2

Rep Agency 3

Reported to 3

Date Reported 3

Time Reported 3

Rep Method 3

Dept Health Not.

OES Notified

Contam Warning

Warning Duration

A variety of approaches exist for estimating the volume of a sanitary sewer spill. This appendix documents the three methods that are most often employed. The person preparing the estimate should use the method most appropriate to the sewer overflow in question and use the best information available.

1. Method I: Eyeball Estimate

The volume of small spills can be estimated using an "eyeball estimate". To use this method imagine the amount of water that would spill from a bucket or a barrel. A bucket contains 5 gallons and a barrel contains 50 gallons. If the spill is larger than 50 gallons, try to break the standing water into barrels and then multiply by 50 gallons. This method is useful for contained spills up to approximately 200 gallons.

2. Method II: Measured Volume

The volume of most small spills that have been contained can be estimated using this method. The shape, dimensions, and the depth of the contained wastewater are needed. The shape and dimensions are used to calculate the area of the spills and the depth is used to calculate the volume.

Step 1: Sketch the shape of the contained sewage.

Step 2: Measure or pace off the dimensions.

Step 3: Measure the depth at several locations and select an average.

Step 4: Convert the dimensions, including depth, to feet.

Step 5: Calculate the area in square feet using the following formulas:

Rectangle: Area = length (feet) x width (feet)

Circle: Area = diameter (feet) x diameter (feet) x 3.14 x .25

Triangle: Area = base (feet) x height (feet) x 0.5

Step 6: Multiply the area (square feet) times the depth (in feet) to obtain the volume in cubic feet.

Step 7: Multiply the volume in cubic feet by 7.5 to convert it to gallons

Figure 1: Common Shapes and Dimensions

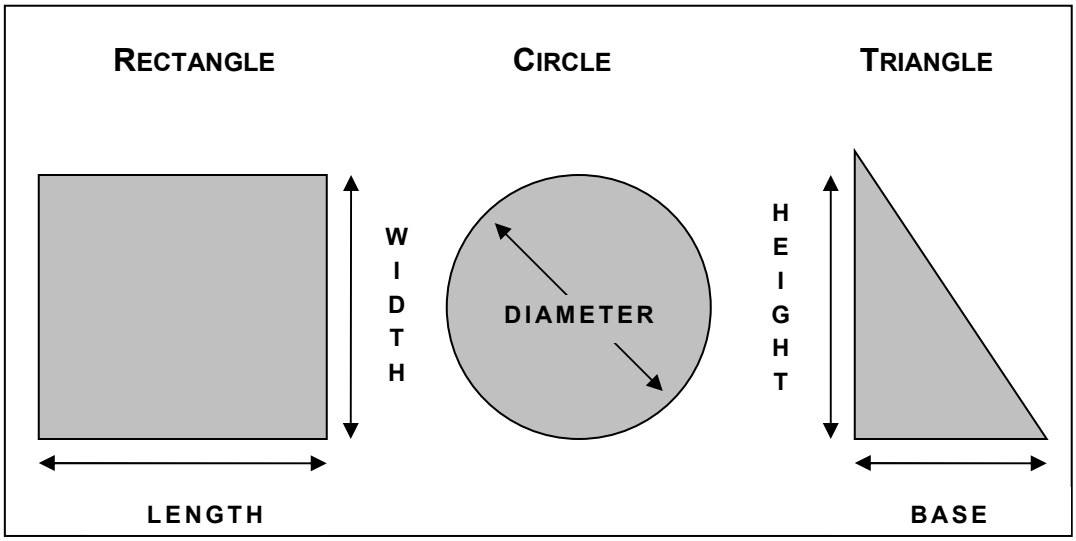

3. Method III: Duration and Flowrate

Calculating the volume of larger spills, where it is difficult or impossible to measure the area and depth, requires a different approach. In this method, the separate estimates are made of the duration of the spill and the flowrate. The methods of estimating duration and flowrate are:

Duration: The duration is the elapsed time from the time the spill started to the time that the flow was restored.

Start time: The start time is sometimes difficult to establish. Here are some approaches:

- Local residents can be used to establish start time. Inquire as to their observations. Spills that occur in rights-of-way are usually observed and reported promptly. Spills that occur out of the public view can go on longer. Sometimes observations like odors or sounds (*e.g.,* water running in a normally dry creek bed) can be used to estimate the start time.
- Changes in flow on a downstream flow meter can be used to establish the start time. Typically the daily flow peaks are "cut off" or flattened by the loss of flow. This can be identified by comparing hourly flow data during the spill event with flow data from prior days.
- Conditions at the spill site change over time. Initially there will be limited deposits of toilet paper and other sewage solids. After a few days to a week, the sewage solids form a light-colored residue. After a few weeks to a month, the sewage solids turn dark. The quantity of toilet paper and other materials of sewage origin increase over time. These observations can be used to estimate the start time in the absence of other information. Taking photographs to document the observations can be helpful if questions arise later in the process.

- It is important to remember that spills may not be continuous. Blockages are not usually complete (some flow continues). In this case the spill would occur during the peak flow periods (typically 10:00 to 12:00 and 13:00 to 16:00 each day). Spills that occur due to peak flows in excess of capacity will occur only during, and for a short period after, heavy rainfall.

End time: The end time is usually much easier to establish. Field crews on-site observe the "blow down" that occurs when the blockage has been removed. The "blow down" can also be observed in downstream flow meters.

Flow Rate: The flowrate is the average flow that left the sewer system during the time of the spill. There are three common ways to estimate the flowrate:

- The San Diego Manhole Flowrate Chart: This chart, included below, shows sewage flowing from manhole covers at a variety of flowrates. The observations of the field crew can be used to select the appropriate flowrate from the chart. If possible, photographs are useful in documenting basis for the flowrate estimate.
- Flow meter: Changes in flows in downstream flow meters can be used to estimate the flowrate during the spill.
- Counting Connections: Once the location of the spill is known, the number of upstream connections can be determined from the sewer maps. Multiply the number of connections by 200 to 250 gallons per day per connection or 8 to 10 gallons per hour per connection.

  For example: 22 upstream connections x 9 gallons per hour per connection

  = 198 gallons per hour / 60 minutes per hour

  = 3.3 gallons per minute

Spill Volume: Once duration and flowrate have been estimated, the volume of the spill is the product of the duration in hours or days and the flowrate in gallons per hour or gallons per day.

For example:

Spill start time = 11:00

Spill end time = 14:00

Spill duration = 3 hours

3.3 gallons per minute X 3 hours X 60 minutes per hour

= 594 gallons

Manhole Overflow Flowrate Guide

City of San Diego
Metropolitan Wastewater Department

Reference Sheet for Estimating Sewer Spills from Overflowing Sewer Manholes

All estimates are calculated in gallons per minute (gpm)

Wastewater Collection Division
(619) 654-4160

5 gpm

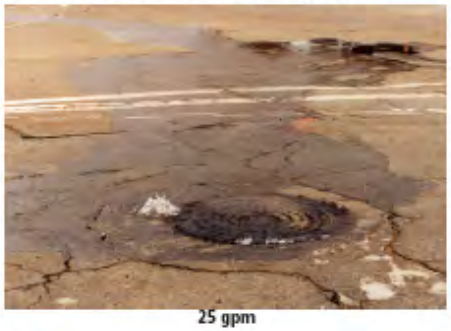
25 gpm

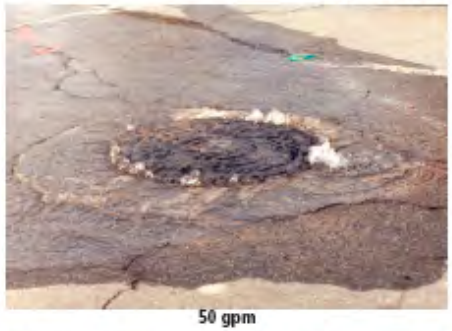
50 gpm

100 gpm

150 gpm

200 gpm

225 gpm

250 gpm

275 gpm

All photos were taken during a demonstration using metered water from a hydrant in cooperation with the City of San Diego's Water Department.

rev. 4/99

OES Control No: _____

CIWQS SSO ID: _____

Staff Initial _____

Water Quality Sampling Field Data Form

SSO START TIME – STOP TIME INFORMATION

Estimated SSO start Time: _____:_____ ☐ AM ☐ PM Date: _____/_____/_____

Estimated SSO end Time: _____:_____ ☐ AM ☐ PM Date: _____/_____/_____

1. Did SSO discharge to a stream, creek, and/or other surface water? ☐ Yes ☐ No
2. Was there a discharge to a storm drain, drainage channel, and/or surface water that was **NOT fully captured and returned to the wastewater collection system?** ☐ Yes ☐ No

Affected creek/stream name: _____

Affected watershed name: _____

County: _____ **State:** _____

Latitude: _____ **Longitude:** _____

Approximate size (or distance) of affected area (*ft*^{2} *or mi.*): _____

Sample site of affected area (description):

_____

_____

_____

Map page: _____

SAMPLING INFORMATION

Time _____:_____ ☐ AM ☐ PM Date: _____/_____/_____

Sample ID No.	Sample Type	Container No.	Field Analysis Type	Field Analysis Measurement	Sample Temp. (°F)

Past (24-hour) weather:	Current weather:	Forecast (24-hour) weather:
☐ Heavy rain	☐ Heavy rain	☐ Heavy rain
☐ Light rain	☐ Light rain	☐ Light rain
☐ No rain	☐ No rain	☐ No rain
☐ Other: _____	☐ Other: _____	☐ Other: _____

STATE OF CALIFORNIA
WATER RESOURCES CONTROL BOARD
ORDER NO. WQ 2013-0058-EXEC

AMENDING MONITORING AND REPORTING PROGRAM
FOR
STATEWIDE GENERAL WASTE DISCHARGE REQUIREMENTS FOR
SANITARY SEWER SYSTEMS

The State of California, Water Resources Control Board (hereafter State Water Board) finds:

1. The State Water Board is authorized to prescribe statewide general Waste Discharge Requirements (WDRs) for categories of discharges that involve the same or similar operations and the same or similar types of waste pursuant to Water Code section 13263(i).

2. Water Code section 13193 *et seq.* requires the Regional Water Quality Control Boards (Regional Water Boards) and the State Water Board (collectively, the Water Boards) to gather Sanitary Sewer Overflow (SSO) information and make this information available to the public, including but not limited to, SSO cause, estimated volume, location, date, time, duration, whether or not the SSO reached or may have reached waters of the state, response and corrective action taken, and an enrollee's contact information for each SSO event. An enrollee is defined as the public entity having legal authority over the operation and maintenance of, or capital improvements to, a sanitary sewer system greater than one mile in length.

3. Water Code section 13271, *et seq.* requires notification to the California Office of Emergency Services (Cal OES), formerly the California Emergency Management Agency, for certain unauthorized discharges, including SSOs.

4. On May 2, 2006, the State Water Board adopted Order 2006-0003-DWQ, "Statewide Waste Discharge Requirements for Sanitary Sewer Systems"[1] (hereafter SSS WDRs) to comply with Water Code section 13193 and to establish the framework for the statewide SSO Reduction Program.

5. Subsection G.2 of the SSS WDRs and the Monitoring and Reporting Program (MRP) provide that the Executive Director may modify the terms of the MRP at any time.

6. On February 20, 2008, the State Water Board Executive Director adopted a revised MRP for the SSS WDRs to rectify early notification deficiencies and ensure that first responders are notified in a timely manner of SSOs discharged into waters of the state.

7. When notified of an SSO that reaches a drainage channel or surface water of the state, Cal OES, pursuant to Water Code section 13271(a)(3), forwards the SSO notification information[2] to local government agencies and first responders including local public health officials and the applicable Regional Water Board. Receipt of notifications for a single SSO event from both the SSO reporter

---

[1] Available for download at:
http://www.waterboards.ca.gov/board_decisions/adopted_orders/water_quality/2006/wqo/wqo2006_0003.pdf

[2] Cal OES Hazardous Materials Spill Reports available Online at:
http://w3.calema.ca.gov/operational/malhaz.nsf/$defaultview and http://w3.calema.ca.gov/operational/malhaz.nsf

and Cal OES is duplicative. To address this, the SSO notification requirements added by the February 20, 2008 MRP revision are being removed in this MRP revision.

8. In the February 28, 2008 Memorandum of Agreement between the State Water Board and the California Water and Environment Association (CWEA), the State Water Board committed to re-designing the CIWQS[3] Online SSO Database to allow "event" based SSO reporting versus the original "location" based reporting. Revisions to this MRP and accompanying changes to the CIWQS Online SSO Database will implement this change by allowing for multiple SSO appearance points to be associated with each SSO event caused by a single asset failure.

9. Based on stakeholder input and Water Board staff experience implementing the SSO Reduction Program, SSO categories have been revised in this MRP. In the prior version of the MRP, SSOs have been categorized as Category 1 or Category 2. This MRP implements changes to SSO categories by adding a Category 3 SSO type. This change will improve data management to further assist Water Board staff with evaluation of high threat and low threat SSOs by placing them in unique categories (i.e., Category 1 and Category 3, respectively). This change will also assist enrollees in identifying SSOs that require Cal OES notification.

10. Based on over six years of implementation of the SSS WDRs, the State Water Board concludes that the February 20, 2008 MRP must be updated to better advance the SSO Reduction Program[4] objectives, assess compliance, and enforce the requirements of the SSS WDRs.

IT IS HEREBY ORDERED THAT:

Pursuant to the authority delegated by Water Code section 13267(f), Resolution 2002-0104, and Order 2006-0003-DWQ, the MRP for the SSS WDRs (Order 2006-0003-DWQ) is hereby amended as shown in Attachment A and shall be effective on September 9, 2013.

8/6/13
Date

Thomas Howard
Executive Director

[3] California Integrated Water Quality System (CIWQS) publicly available at http://www.waterboards.ca.gov/ciwqs/publicreports.shtml

[4] Statewide Sanitary Sewer Overflow Reduction Program information is available at: http://www.waterboards.ca.gov/water_issues/programs/sso/

ATTACHMENT A

STATE WATER RESOURCES CONTROL BOARD
ORDER NO. WQ 2013-0058-EXEC

AMENDING MONITORING AND REPORTING PROGRAM
FOR
STATEWIDE GENERAL WASTE DISCHARGE REQUIREMENTS FOR
SANITARY SEWER SYSTEMS

This Monitoring and Reporting Program (MRP) establishes monitoring, record keeping, reporting and public notification requirements for Order 2006-0003-DWQ, "Statewide General Waste Discharge Requirements for Sanitary Sewer Systems" (SSS WDRs). This MRP shall be effective from September 9, 2013 until it is rescinded. The Executive Director may make revisions to this MRP at any time. These revisions may include a reduction or increase in the monitoring and reporting requirements. All site specific records and data developed pursuant to the SSS WDRs and this MRP shall be complete, accurate, and justified by evidence maintained by the enrollee. Failure to comply with this MRP may subject an enrollee to civil liabilities of up to $5,000 a day per violation pursuant to Water Code section 13350; up to $1,000 a day per violation pursuant to Water Code section 13268; or referral to the Attorney General for judicial civil enforcement. The State Water Resources Control Board (State Water Board) reserves the right to take any further enforcement action authorized by law.

A. SUMMARY OF MRP REQUIREMENTS

Table 1 – Spill Categories and Definitions

CATEGORIES	DEFINITIONS [see Section A on page 5 of Order 2006-0003-DWQ, for Sanitary Sewer Overflow (SSO) definition]
CATEGORY 1	Discharges of untreated or partially treated wastewater of **any volume** resulting from an enrollee's sanitary sewer system failure or flow condition that: • Reach surface water and/or reach a drainage channel tributary to a surface water; or • Reach a Municipal Separate Storm Sewer System (MS4) and are not fully captured and returned to the sanitary sewer system or not otherwise captured and disposed of properly. Any volume of wastewater not recovered from the MS4 is considered to have reached surface water unless the storm drain system discharges to a dedicated storm water or groundwater infiltration basin (e.g., infiltration pit, percolation pond).
CATEGORY 2	Discharges of untreated or partially treated wastewater of **1,000 gallons or greater** resulting from an enrollee's sanitary sewer system failure or flow condition that **do not** reach surface water, a drainage channel, or a MS4 unless the entire SSO discharged to the storm drain system is fully recovered and disposed of properly.
CATEGORY 3	All other discharges of untreated or partially treated wastewater resulting from an enrollee's sanitary sewer system failure or flow condition.
PRIVATE LATERAL SEWAGE DISCHARGE (PLSD)	Discharges of untreated or partially treated wastewater resulting from blockages or other problems **within a privately owned sewer lateral** connected to the enrollee's sanitary sewer system or from other private sewer assets. PLSDs that the enrollee becomes aware of may be voluntarily reported to the California Integrated Water Quality System (CIWQS) Online SSO Database.

Table 2 – Notification, Reporting, Monitoring, and Record Keeping Requirements

ELEMENT	REQUIREMENT	METHOD
NOTIFICATION **(see section B of MRP)**	• Within two hours of becoming aware of any Category 1 SSO **greater than or equal to 1,000 gallons discharged to surface water or spilled in a location where it probably will be discharged to surface water**, notify the California Office of Emergency Services (Cal OES) and obtain a notification control number.	Call Cal OES at: **(800) 852-7550**
REPORTING **(see section C of MRP)**	• Category 1 SSO: Submit draft report within three business days of becoming aware of the SSO and certify within 15 calendar days of SSO end date. • Category 2 SSO: Submit draft report within 3 business days of becoming aware of the SSO and certify within 15 calendar days of the SSO end date. • Category 3 SSO: Submit certified report within 30 calendar days of the end of month in which SSO the occurred. • SSO Technical Report: Submit within 45 calendar days after the end date of any Category 1 SSO in which 50,000 gallons or greater are spilled to surface waters. • "No Spill" Certification: Certify that no SSOs occurred within 30 calendar days of the end of the month or, if reporting quarterly, the quarter in which no SSOs occurred. • Collection System Questionnaire: Update and certify every 12 months.	Enter data into the CIWQS Online SSO Database (http://ciwqs.waterboards.ca.gov/), certified by enrollee's Legally Responsible Official(s).
WATER QUALITY MONITORING **(see section D of MRP)**	• Conduct water quality sampling **within 48 hours** after initial SSO notification for Category 1 SSOs in which 50,000 gallons or greater are spilled to surface waters.	Water quality results are required to be uploaded into CIWQS for Category 1 SSOs in which 50,000 gallons or greater are spilled to surface waters.
RECORD KEEPING **(see section E of MRP)**	• SSO event records. • Records documenting Sanitary Sewer Management Plan (SSMP) implementation and changes/updates to the SSMP. • Records to document Water Quality Monitoring for SSOs of 50,000 gallons or greater spilled to surface waters. • Collection system telemetry records if relied upon to document and/or estimate SSO Volume.	Self-maintained records shall be available during inspections or upon request.

B. NOTIFICATION REQUIREMENTS

Although Regional Water Quality Control Boards (Regional Water Boards) and the State Water Board (collectively, the Water Boards) staff do not have duties as first responders, this MRP is an appropriate mechanism to ensure that the agencies that have first responder duties are notified in a timely manner in order to protect public health and beneficial uses.

1. For any Category 1 SSO greater than or equal to 1,000 gallons that results in a discharge to a surface water or spilled in a location where it probably will be discharged to surface water, either directly or by way of a drainage channel or MS4, the enrollee shall, as soon as possible, but not later than two (2) hours after (A) the enrollee has knowledge of the discharge, (B) notification is possible, and (C) notification can be provided without substantially impeding cleanup or other emergency measures, notify the Cal OES and obtain a notification control number.

2. To satisfy notification requirements for each applicable SSO, the enrollee shall provide the information requested by Cal OES before receiving a control number. Spill information requested by Cal OES may include:

   i. Name of person notifying Cal OES and direct return phone number.
   ii. Estimated SSO volume discharged (gallons).
   iii. If ongoing, estimated SSO discharge rate (gallons per minute).
   iv. SSO Incident Description:
      a. Brief narrative.
      b. On-scene point of contact for additional information (name and cell phone number).
      c. Date and time enrollee became aware of the SSO.
      d. Name of sanitary sewer system agency causing the SSO.
      e. SSO cause (if known).
   v. Indication of whether the SSO has been contained.
   vi. Indication of whether surface water is impacted.
   vii. Name of surface water impacted by the SSO, if applicable.
   viii. Indication of whether a drinking water supply is or may be impacted by the SSO.
   ix. Any other known SSO impacts.
   x. SSO incident location (address, city, state, and zip code).

3. Following the initial notification to Cal OES and until such time that an enrollee certifies the SSO report in the CIWQS Online SSO Database, the enrollee shall provide updates to Cal OES regarding substantial changes to the estimated volume of untreated or partially treated sewage discharged and any substantial change(s) to known impact(s).

4. PLSDs: The enrollee is strongly encouraged to notify Cal OES of discharges greater than or equal to 1,000 gallons of untreated or partially treated wastewater that result or may result in a discharge to surface water resulting from failures or flow conditions within a privately owned sewer lateral or from other private sewer asset(s) if the enrollee becomes aware of the PLSD.

C. REPORTING REQUIREMENTS

1. **CIWQS Online SSO Database Account:** All enrollees shall obtain a CIWQS Online SSO Database account and receive a "Username" and "Password" by registering through CIWQS. These accounts allow controlled and secure entry into the CIWQS Online SSO Database.

2. **SSO Mandatory Reporting Information:** For reporting purposes, if one SSO event results in multiple appearance points in a sewer system asset, the enrollee shall complete one SSO report in the CIWQS Online SSO Database which includes the GPS coordinates for the location of the SSO appearance point closest to the failure point, blockage or location of the flow condition that caused the SSO, and provide descriptions of the locations of all other discharge points associated with the SSO event.

3. **SSO Categories**

   i. **Category 1** – Discharges of untreated or partially treated wastewater of any volume resulting from an enrollee's sanitary sewer system failure or flow condition that:

      a. Reach surface water and/or reach a drainage channel tributary to a surface water; or

      b. Reach a MS4 and are not fully captured and returned to the sanitary sewer system or not otherwise captured and disposed of properly. Any volume of wastewater not recovered from the MS4 is considered to have reached surface water unless the storm drain system discharges to a dedicated storm water or groundwater infiltration basin (e.g., infiltration pit, percolation pond).

   ii. **Category 2** – Discharges of untreated or partially treated wastewater greater than or equal to 1,000 gallons resulting from an enrollee's sanitary sewer system failure or flow condition that does not reach a surface water, a drainage channel, or the MS4 unless the entire SSO volume discharged to the storm drain system is fully recovered and disposed of properly.

   iii. **Category 3** – All other discharges of untreated or partially treated wastewater resulting from an enrollee's sanitary sewer system failure or flow condition.

4. **Sanitary Sewer Overflow Reporting to CIWQS - Timeframes**

   i. **Category 1 and Category 2 SSOs** – All SSOs that meet the above criteria for Category 1 or Category 2 SSOs shall be reported to the CIWQS Online SSO Database:

      a. Draft reports for Category 1 and Category 2 SSOs shall be submitted to the CIWQS Online SSO Database within three (3) business days of the enrollee becoming aware of the SSO. Minimum information that shall be reported in a draft Category 1 SSO report shall include all information identified in section 8.i.a. below. Minimum information that shall be reported in a Category 2 SSO draft report shall include all information identified in section 8.i.c below.

      b. A final Category 1 or Category 2 SSO report shall be certified through the CIWQS Online SSO Database within 15 calendar days of the end date of the SSO. Minimum information that shall be certified in the final Category 1 SSO report shall include all information identified in section 8.i.b below. Minimum information that shall be certified in a final Category 2 SSO report shall include all information identified in section 8.i.d below.

ii. **Category 3 SSOs** – All SSOs that meet the above criteria for Category 3 SSOs shall be reported to the CIWQS Online SSO Database and certified within 30 calendar days after the end of the calendar month in which the SSO occurs (e.g., all Category 3 SSOs occurring in the month of February shall be entered into the database and certified by March 30). Minimum information that shall be certified in a final Category 3 SSO report shall include all information identified in section 8.i.e below.

iii. **"No Spill" Certification** – If there are no SSOs during the calendar month, the enrollee shall either 1) certify, within 30 calendar days after the end of each calendar month, a "No Spill" certification statement in the CIWQS Online SSO Database certifying that there were no SSOs for the designated month, or 2) certify, quarterly within 30 calendar days after the end of each quarter, "No Spill" certification statements in the CIWQS Online SSO Database certifying that there were no SSOs for each month in the quarter being reported on. For quarterly reporting, the quarters are Q1 - January/ February/ March, Q2 - April/May/June, Q3 - July/August/September, and Q4 - October/November/December.

If there are no SSOs during a calendar month but the enrollee reported a PLSD, the enrollee shall still certify a "No Spill" certification statement for that month.

iv. **Amended SSO Reports** – The enrollee may update or add additional information to a certified SSO report within 120 calendar days after the SSO end date by amending the report or by adding an attachment to the SSO report in the CIWQS Online SSO Database. SSO reports certified in the CIWQS Online SSO Database prior to the adoption date of this MRP may only be amended up to 120 days after the effective date of this MRP. After 120 days, the enrollee may contact the SSO Program Manager to request to amend an SSO report if the enrollee also submits justification for why the additional information was not available prior to the end of the 120 days.

5. **SSO Technical Report**

The enrollee shall submit an SSO Technical Report in the CIWQS Online SSO Database within 45 calendar days of the SSO end date for any SSO in which 50,000 gallons or greater are spilled to surface waters. This report, which does not preclude the Water Boards from requiring more detailed analyses if requested, shall include at a minimum, the following:

i. **Causes and Circumstances of the SSO:**

a. Complete and detailed explanation of how and when the SSO was discovered.

b. Diagram showing the SSO failure point, appearance point(s), and final destination(s).

c. Detailed description of the methodology employed and available data used to calculate the volume of the SSO and, if applicable, the SSO volume recovered.

d. Detailed description of the cause(s) of the SSO.

e. Copies of original field crew records used to document the SSO.

f. Historical maintenance records for the failure location.

ii. **Enrollee's Response to SSO:**

a. Chronological narrative description of all actions taken by enrollee to terminate the spill.

b. Explanation of how the SSMP Overflow Emergency Response plan was implemented to respond to and mitigate the SSO.

c. Final corrective action(s) completed and/or planned to be completed, including a schedule for actions not yet completed.

iii. **Water Quality Monitoring:**

a. Description of all water quality sampling activities conducted including analytical results and evaluation of the results.

b. Detailed location map illustrating all water quality sampling points.

6. **PLSDs**

Discharges of untreated or partially treated wastewater resulting from blockages or other problems within a privately owned sewer lateral connected to the enrollee's sanitary sewer system or from other private sanitary sewer system assets may be voluntarily reported to the CIWQS Online SSO Database.

i. The enrollee is also encouraged to provide notification to Cal OES per section B above when a PLSD greater than or equal to 1,000 gallons has or may result in a discharge to surface water. For any PLSD greater than or equal to 1,000 gallons regardless of the spill destination, the enrollee is also encouraged to file a spill report as required by Health and Safety Code section 5410 et. seq. and Water Code section 13271, or notify the responsible party that notification and reporting should be completed as specified above and required by State law.

ii. If a PLSD is recorded in the CIWQS Online SSO Database, the enrollee must identify the sewage discharge as occurring and caused by a private sanitary sewer system asset and should identify a responsible party (other than the enrollee), if known. Certification of PLSD reports by enrollees is not required.

7. **CIWQS Online SSO Database Unavailability**

In the event that the CIWQS Online SSO Database is not available, the enrollee must fax or e-mail all required information to the appropriate Regional Water Board office in accordance with the time schedules identified herein. In such event, the enrollee must also enter all required information into the CIWQS Online SSO Database when the database becomes available.

8. **Mandatory Information to be Included in CIWQS Online SSO Reporting**

All enrollees shall obtain a CIWQS Online SSO Database account and receive a "Username" and "Password" by registering through CIWQS which can be reached at CIWQS@waterboards.ca.gov or by calling (866) 792-4977, M-F, 8 A.M. to 5 P.M. These accounts will allow controlled and secure entry into the CIWQS Online SSO Database. Additionally, within thirty (30) days of initial enrollment and prior to recording SSOs into the CIWQS Online SSO Database, all enrollees must complete a Collection System Questionnaire (Questionnaire). The Questionnaire shall be updated at least once every 12 months.

i. **SSO Reports**

At a minimum, the following mandatory information shall be reported prior to finalizing and certifying an SSO report for each category of SSO:

a. **Draft Category 1 SSOs**: At a minimum, the following mandatory information shall be reported for a draft Category 1 SSO report:

1. SSO Contact Information: Name and telephone number of enrollee contact person who can answer specific questions about the SSO being reported.
2. SSO Location Name.
3. Location of the overflow event (SSO) by entering GPS coordinates. If a single overflow event results in multiple appearance points, provide GPS coordinates for the appearance point closest to the failure point and describe each additional appearance point in the SSO appearance point explanation field.
4. Whether or not the SSO reached surface water, a drainage channel, or entered and was discharged from a drainage structure.
5. Whether or not the SSO reached a municipal separate storm drain system.
6. Whether or not the total SSO volume that reached a municipal separate storm drain system was fully recovered.
7. Estimate of the SSO volume, inclusive of all discharge point(s).
8. Estimate of the SSO volume that reached surface water, a drainage channel, or was not recovered from a storm drain.
9. Estimate of the SSO volume recovered (if applicable).
10. Number of SSO appearance point(s).
11. Description and location of SSO appearance point(s). If a single sanitary sewer system failure results in multiple SSO appearance points, each appearance point must be described.
12. SSO start date and time.
13. Date and time the enrollee was notified of, or self-discovered, the SSO.
14. Estimated operator arrival time.
15. For spills greater than or equal to 1,000 gallons, the date and time Cal OES was called.
16. For spills greater than or equal to 1,000 gallons, the Cal OES control number.

b. **Certified Category 1 SSOs**: At a minimum, the following mandatory information shall be reported for a certified Category 1 SSO report, in addition to all fields in section 8.i.a :

1. Description of SSO destination(s).
2. SSO end date and time.
3. SSO causes (mainline blockage, roots, etc.).
4. SSO failure point (main, lateral, etc.).
5. Whether or not the spill was associated with a storm event.
6. Description of spill corrective action, including steps planned or taken to reduce, eliminate, and prevent reoccurrence of the overflow; and a schedule of major milestones for those steps.
7. Description of spill response activities.
8. Spill response completion date.
9. Whether or not there is an ongoing investigation, the reasons for the investigation and the expected date of completion.

10. Whether or not a beach closure occurred or may have occurred as a result of the SSO.
11. Whether or not health warnings were posted as a result of the SSO.
12. Name of beach(es) closed and/or impacted. If no beach was impacted, NA shall be selected.
13. Name of surface water(s) impacted.
14. If water quality samples were collected, identify parameters the water quality samples were analyzed for. If no samples were taken, NA shall be selected.
15. If water quality samples were taken, identify which regulatory agencies received sample results (if applicable). If no samples were taken, NA shall be selected.
16. Description of methodology(ies) and type of data relied upon for estimations of the SSO volume discharged and recovered.
17. SSO Certification: Upon SSO Certification, the CIWQS Online SSO Database will issue a final SSO identification (ID) number.

c. **Draft Category 2 SSOs**: At a minimum, the following mandatory information shall be reported for a draft Category 2 SSO report:

1. Items 1-14 in section 8.i.a above for Draft Category 1 SSO.

d. **Certified Category 2 SSOs**: At a minimum, the following mandatory information shall be reported for a certified Category 2 SSO report:

1. Items 1-14 in section 8.i.a above for Draft Category 1 SSO and Items 1-9, and 17 in section 8.i.b above for Certified Category 1 SSO.

e. **Certified Category 3 SSOs**: At a minimum, the following mandatory information shall be reported for a certified Category 3 SSO report:

1. Items 1-14 in section 8.i.a above for Draft Category 1 SSO and Items 1-5, and 17 in section 8.i.b above for Certified Category 1 SSO.

ii. **Reporting SSOs to Other Regulatory Agencies**

These reporting requirements do not preclude an enrollee from reporting SSOs to other regulatory agencies pursuant to state law. In addition, these reporting requirements do not replace other Regional Water Board notification and reporting requirements for SSOs.

iii. **Collection System Questionnaire**

The required Questionnaire (see subsection G of the SSS WDRs) provides the Water Boards with site-specific information related to the enrollee's sanitary sewer system. The enrollee shall complete and certify the Questionnaire at least every 12 months to facilitate program implementation, compliance assessment, and enforcement response.

iv. **SSMP Availability**

The enrollee shall provide the publicly available internet web site address to the CIWQS Online SSO Database where a downloadable copy of the enrollee's approved SSMP, critical supporting documents referenced in the SSMP, and proof of local governing board approval of the SSMP is posted. If all of the SSMP documentation listed in this subsection is not publicly available on the Internet, the enrollee shall comply with the following procedure:

a. Submit an **electronic** copy of the enrollee's approved SSMP, critical supporting documents referenced in the SSMP, and proof of local governing board approval of the SSMP to the State Water Board, within 30 days of that approval and within 30 days of any subsequent SSMP re-certifications, to the following mailing address:

State Water Resources Control Board
Division of Water Quality
Attn: SSO Program Manager
1001 I Street, 15th Floor, Sacramento, CA 95814

D. WATER QUALITY MONITORING REQUIREMENTS:

To comply with subsection D.7(v) of the SSS WDRs, the enrollee shall develop and implement an SSO Water Quality Monitoring Program to assess impacts from SSOs to surface waters in which 50,000 gallons or greater are spilled to surface waters. The SSO Water Quality Monitoring Program, shall, at a minimum:

1. Contain protocols for water quality monitoring.
2. Account for spill travel time in the surface water and scenarios where monitoring may not be possible (e.g. safety, access restrictions, etc.).
3. Require water quality analyses for ammonia and bacterial indicators to be performed by an accredited or certified laboratory.
4. Require monitoring instruments and devices used to implement the SSO Water Quality Monitoring Program to be properly maintained and calibrated, including any records to document maintenance and calibration, as necessary, to ensure their continued accuracy.
5. Within 48 hours of the enrollee becoming aware of the SSO, require water quality sampling for, at a minimum, the following constituents:
   i. Ammonia
   ii. Appropriate Bacterial indicator(s) per the applicable Basin Plan water quality objective or Regional Board direction which may include total and fecal coliform, enterococcus, and e-coli.

E. RECORD KEEPING REQUIREMENTS:

The following records shall be maintained by the enrollee for a minimum of five (5) years and shall be made available for review by the Water Boards during an onsite inspection or through an information request:

1. General Records: The enrollee shall maintain records to document compliance with all provisions of the SSS WDRs and this MRP for each sanitary sewer system owned including any required records generated by an enrollee's sanitary sewer system contractor(s).
2. SSO Records: The enrollee shall maintain records for each SSO event, including but not limited to:
   i. Complaint records documenting how the enrollee responded to all notifications of possible or actual SSOs, both during and after business hours, including complaints that do not

result in SSOs. Each complaint record shall, at a minimum, include the following information:

a. Date, time, and method of notification.

b. Date and time the complainant or informant first noticed the SSO.

c. Narrative description of the complaint, including any information the caller can provide regarding whether or not the complainant or informant reporting the potential SSO knows if the SSO has reached surface waters, drainage channels or storm drains.

d. Follow-up return contact information for complainant or informant for each complaint received, if not reported anonymously.

e. Final resolution of the complaint.

ii. Records documenting steps and/or remedial actions undertaken by enrollee, using all available information, to comply with section D.7 of the SSS WDRs.

iii. Records documenting how all estimate(s) of volume(s) discharged and, if applicable, volume(s) recovered were calculated.

3. Records documenting all changes made to the SSMP since its last certification indicating when a subsection(s) of the SSMP was changed and/or updated and who authorized the change or update. These records shall be attached to the SSMP.

4. Electronic monitoring records relied upon for documenting SSO events and/or estimating the SSO volume discharged, including, but not limited to records from:

i. Supervisory Control and Data Acquisition (SCADA) systems

ii. Alarm system(s)

iii. Flow monitoring device(s) or other instrument(s) used to estimate wastewater levels, flow rates and/or volumes.

F. CERTIFICATION

1. All information required to be reported into the CIWQS Online SSO Database shall be certified by a person designated as described in subsection J of the SSS WDRs. This designated person is also known as a Legally Responsible Official (LRO). An enrollee may have more than one LRO.

2. Any designated person (i.e. an LRO) shall be registered with the State Water Board to certify reports in accordance with the CIWQS protocols for reporting.

3. Data Submitter (DS): Any enrollee employee or contractor may enter draft data into the CIWQS Online SSO Database on behalf of the enrollee if authorized by the LRO and registered with the State Water Board. However, only LROs may certify reports in CIWQS.

4. The enrollee shall maintain continuous coverage by an LRO. Any change of a registered LRO or DS (e.g., retired staff), including deactivation or a change to the LRO's or DS's contact information, shall be submitted by the enrollee to the State Water Board within 30 days of the change by calling (866) 792-4977 or e-mailing help@ciwqs.waterboards.ca.gov.

5. A registered designated person (i.e., an LRO) shall certify all required reports under penalty of perjury laws of the state as stated in the CIWQS Online SSO Database at the time of certification.

CERTIFICATION

The undersigned Clerk to the Board does hereby certify that the foregoing is a full, true, and correct copy of an order amended by the Executive Director of the State Water Resources Control Board.

7/30/13
Date

Jeanine Townsend
Clerk to the Board

Emergency repairs within or near a creek or waterway can be done without violating environmental regulations, if compliance with the regulations is considered before, during, and after an emergency response. Emergency repairs may fall under the jurisdiction of several regulations and agencies. The following flow chart has been provided as an outline for the environmental permitting process during an emergency event in or near a waterway.

State and Federally Listed Species

To "take" a species listed as endangered by the Federal Endangered Species Act (FESA), or "to harass, harm, pursue, hunt, shoot, wound, kill, trap, capture, or collect, or to attempt to engage in any such conduct" towards such a species, is unlawful, regardless of whether the take results from an emergency response. However, proactive measures in advance of an emergency can help ensure emergency responses do not result in unauthorized take. Wherever possible, prior to starting work contact CVSan's environmental personnel to determine whether the repair activities potentially impact species protected under the FESA or the California Endangered Species Act (CESA).

If the repair activities are federally funded or authorized, or a federal disaster area has been declared, Section 7 of the FESA allows a streamlined consultation process with U.S. Fish and Wildlife Service (USFWS) and National Marine Fisheries Service (NMFS), which can simplify the process of avoiding and mitigating for take.

As with FESA, there is no exemption for take under CESA. If a state listed species is potentially impacted, coordinate with the County Department of Environmental Review and Assessment or another biologist and design measures to avoid take of the species. If the project cannot be modified to avoid potential take of a state listed species, coordinate with CVSan's environmental personnel and the California Department of Fish and Game (CDFG) to explore other options.

Section 404 of the Clean Water Act

Under Section 404 of the Clean Water Act, the U.S. Army Corps of Engineers (Corps) has jurisdiction of all navigable waters, including wetlands.

Section 404 Maintenance Exemption. Emergency repair activities within waterways may qualify for a Maintenance Exemption under Section 404 if all of the following conditions are met:

1. The repair involves reconstruction of recently damaged parts of active collection system sewers and structures, and does not involve any new, permanent facilities upgrades;
2. The repair activities are necessary because there is a clear, sudden, unexpected, and imminent threat to life or property demanding immediate action to prevent or mitigate loss of, or damage to, life, health, property or essential public services, such as an SSO;
3. The repair activities do not result in any discharge of dredged or fill material which contains any toxic pollutant listed under Section 307 of the Clean Water Act;

4. The repair activities do not result in any impairment of the waterway reach or flow and circulation of the water;
5. The repair activities do not result in "take" of federally listed species;
6. If federal funding or approvals are involved, the repair activities do not have the potential to affect federally listed species or to adversely modify critical habitat for such species.

If the repair activities qualify for a Maintenance Exemption, no agency notifications are necessary, and work can be carried out immediately. Coordinate with CVSan's environmental personnel to ensure that impacts are minimized by protecting resources and restoring temporarily disturbed areas.

Nationwide Permit Program. If repair activities involve small modifications to the original structures, and/or the repair has only minimal impacts to the aquatic environment, immediately contact the Corps to find out if the work falls under the authority of the Nationwide Permit (NWP) Program under an emergency situation.

If the work can be done under the NWP, then notify the Corps of the emergency, immediately begin repair work, and the Corps may issue an after the fact NWP once the emergency work is complete.

Section 404 Regional General Permit No. 60. If the repair activities do not meet all of the conditions for a Maintenance Exemption, the work may be eligible for Section 404 coverage under Regional General Permit (RGP) No. 60, which addresses emergency actions. Prior notification to the Corps is necessary in this situation, and work cannot begin until the Corps has authorized the work. The notification package should include the specific information outlined in the Section 404 RGP No. 60. The Corps will distribute the notification to other agencies for their review and comments. The authorization will likely include requirements for avoiding, minimizing, and mitigating wetland impacts. Work must begin within seven days of receiving authorization to proceed and must be completed within six months of authorization.

Section 401 of the Clean Water Act

Water Quality Certification. If the repair work qualifies for RGP No. 60, it is also subject to the provisions of the Water Quality Certification (WQC) issued by the State Water Resources Control Board (SWRCB) under Clean Water Act Section 401. Prior to starting work, the notification sent to the Corps for RGP No. 60 must also be forwarded to SWRCB with the appropriate review fee. <u>If the District is not contacted by the SWRCB within 30 calendar days of the postmarked date of the notification, it is assumed that the project meets the conditions of the WQC order and repair work may proceed.</u>

Post-project reports must be submitted to the Corps and SWRCB consistent with provisions in RGP No. 60 and the WQC.

Section 1610 of the California Fish and Game Code

Emergency Notification Form. If the emergency action also involves diversion or obstruction of natural flow (such as with the use of a spill containment dam or spill recovery), or modification of a stream channel, CDFG must be notified within14 days after starting the work, using the CDFG Emergency Notification Form.

California Environmental Quality Act

California Environmental Quality Act (CEQA) Compliance. Projects that require specific actions necessary to prevent or mitigate an emergency, can qualify for an exemption under CEQA. An emergency is defined as "a sudden, unexpected occurrence, involving a clear and imminent danger, demanding immediate action to prevent or mitigate loss of, or damage to, life, health, property, or essential pubic services." "Emergency" includes such occurrences as "fire, flood, earthquake, or other soil or geologic movements, as well as such occurrences as riot, accident, or sabotage." CEQA defines an emergency narrowly, and the definition does not include situations caused by deferred maintenance.

If a project does not qualify as an emergency under CEQA, then contact CVSan's environmental personnel to determine if the project qualifies for any of the several other statutory exemptions to CEQA. The level of effort required to reach CEQA compliance varies from determination of applicable exemption, to completion of an Environmental Impact Report.

Creek Protection: Emergency Environmental and Waterway Permits

Emergency repairs within or near a creek or waterway can be done without violating environmental regulations, if compliance with the regulations is considered before, during, and after an emergency response. Emergency repairs may fall under the jurisdiction of several regulations and agencies. The following flow chart has been provided as an outline for the environmental permitting process during an emergency event in or near a waterway.

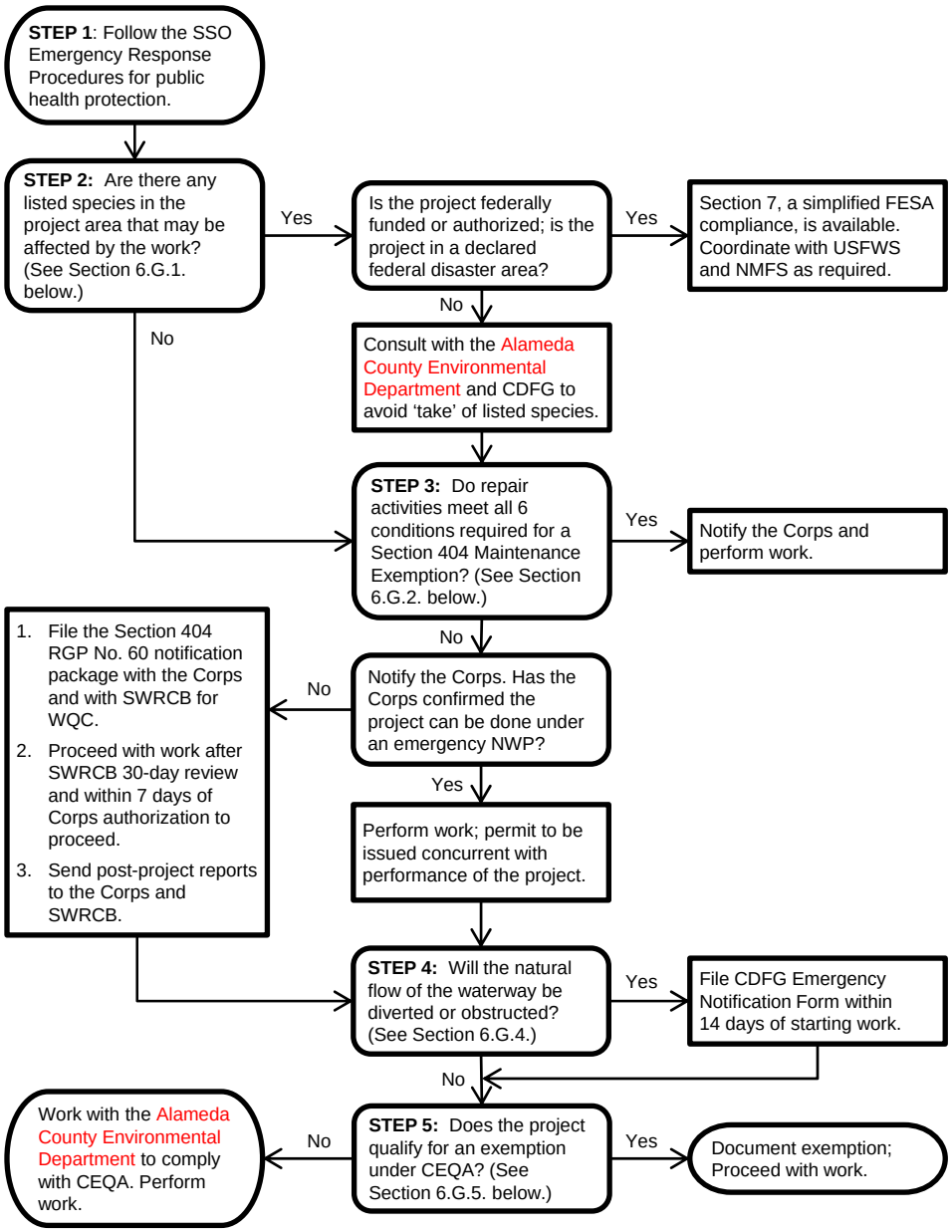

STATE OF CALIFORNIA
DEPARTMENT OF FISH AND WILDLIFE
LAKE OR STREAMBED ALTERATION PROGRAM

Information Regarding Emergency Work

Fish and Game Code section 1610 exempts certain types of emergency work from the notification requirement in section 1602. Specifically, notification is not required before beginning any of the following emergency work:

1) immediate emergency work necessary to protect life or property;
2) immediate emergency repairs to public service facilities necessary to maintain service as a result of a disaster in an area in which the Governor has proclaimed a state of emergency; and/or
3) emergency projects undertaken, carried out, or approved by a state or local governmental agency to maintain, repair, or restore an existing highway, as defined in Vehicle Code section 360, within the existing right-of-way of the highway, that has been damaged as a result of fire, flood, storm, earthquake, land subsidence, gradual earth movement, or landslide, within one year of the damage.

Although notification is not required ***before*** beginning the emergency work, the Department must be notified in writing within 14 days ***after*** the work begins ("emergency notification"). The notification requirement can be met by completing and submitting the attached Emergency Notification form to the Department regional office that serves the county where the emergency work occurs.

If the Department does not receive the emergency notification within 14 days after the work begins, or the work did not constitute emergency work, the entity responsible for the work may be subject to criminal or civil prosecution. Hence, it is important that the work meets the definition of "emergency."

"Emergency" means "a ***sudden, unexpected*** occurrence, involving a clear and imminent danger, demanding ***immediate*** action to prevent or mitigate the loss of, or damage to, life, health, property, or essential public services. 'Emergency' includes such occurrences as fire, flood, earthquake, or other soil or geologic movements, as well as such occurrences as riot, accident, or sabotage." (Public Resources Code section 21060.3 (emphasis added)). See also Fish and Game Code section 1601, subdivision (c).

Although emergency work is exempt from the notification requirement in Fish and Game Code section 1602, the entity responsible for completing the emergency work must comply with other applicable local, state, and federal laws, including other provisions in the Fish and Game Code, such as section 5650 (prohibiting the discharge or release of deleterious substances or materials) and section 5901 (prohibiting the construction or maintenance of any device or contrivance that prevents or impedes fish passage).

The Department recommends that emergency work be conducted in accordance with the guidelines below to minimize impacts to fish and wildlife resources.

1) The person(s) completing the emergency work should prevent raw cement, concrete, or washings thereof, asphalt, paint, or other coating material, oil or other petroleum products, or any other substance which can be deleterious to aquatic life from contaminating soil and/or entering a river, stream, lake or other waters of the state. (See Fish and Game Code section 5650.)

2) The person(s) completing the emergency work should minimize the disturbance or removal of vegetation in completing the work.

FOR DEPARTMENT USE ONLY			
Date Received		Notification Number	

STATE OF CALIFORNIA

DEPARTMENT OF FISH AND WILDLIFE

LAKE OR STREAMBED ALTERATION PROGRAM
NOTIFICATION OF EMERGENCY WORK

Complete EACH field and attach additional pages if necessary.

1. PERSON, BUSINESS, OR AGENCY RESPONSIBLE FOR EMERGENCY WORK

If the emergency work is being conducted by a business, agency, or utility, please include the name of your designated representative.			
Name			
Business/Agency			
Street Address			
City, State, Zip			
Telephone		Fax	
Email			

2. LOCATION OF EMERGENCY WORK

Address or description of project location. (*Include a map that marks the location of the project with a reference to the nearest city or town, and provide driving directions from a major road or highway.*)				
				☐ *Continued on additional page(s)*
River, stream, or lake affected by project				
What water body is the river, stream, or lake tributary to?				
Is the river or stream segment affected by the project listed in the state or federal Wild and Scenic Rivers Acts?	☐ Yes	☐ No	☐ Unknown	
County				
USGS 7.5 Minute Quad Map Name	Township	Range	Section	Section
				☐ *Continued on additional page(s)*
Meridian (*check one*)	☐ Humboldt	☐ Mt. Diablo	☐ San Bernardino	

2. LOCATION OF EMERGENCY WORK continued

Assessor's Parcel Number(s)			
☐ *Continued on additional page(s)*			
Coordinates (*If available, provide at least latitude/longitude or UTM coordinates and check appropriate boxes.*)			
Latitude/Longitude	*Latitude:*	*Longitude:*	
	☐ Degrees/Minutes/Seconds	☐ Decimal Degrees	☐ Decimal Minutes
UTM	*Easting:*	*Northing:*	☐ Zone 10 ☐ Zone 11
Datum used for Latitude/Longitude or UTM	☐ NAD 27	☐ NAD 83 or WGS 84	

3. NATURE OF EMERGENCY WORK

Date emergency began or was first discovered	
Date emergency work began	
Date emergency work was or will be completed	

Briefly describe the type of emergency (e.g., flooding or earth movement).

Identify the type of property affected by the emergency by marking the appropriate boxes below.

☐ Bridge, culvert, or other water crossing ☐ Dwelling or other building ☐ Levee or other bank protection ☐ Road

☐ Farmland ☐ Utility ☐ Other (describe): _____

Describe the emergency work.

☐ Continued on additional page(s)

3. NATURE OF EMERGENCY WORK continued

Briefly describe the dimensions (e.g., length and width) of the area or areas affected by the emergency and the work area.
☐ Continued on additional page(s)
Describe any work you intend to complete after the emergency to restore the affected area.
☐ Continued on additional page(s)

4. SIGNATURE

I hereby certify that to the best of my knowledge the information in this emergency notification is true and correct and that I am authorized to sign this notification as, or on behalf of, the person, business, or agency responsible for the emergency work. *I understand that if the Department does not receive this emergency notification within 14 days after the emergency work begins, or the work did not constitute emergency work, I and/or the person, business, or agency responsible for the emergency work may be subject to criminal or civil prosecution.*

Signature of Applicant or Applicant's Authorized Representative _____ Date _____

Print Name _____

Title 14. California Code of Regulations
Chapter 3. Guidelines for Implementation of the California Environmental Quality Act

Article 18. Statutory Exemptions

Sections 15260 to 15285

15260. General

This article describes the exemptions from CEQA granted by the Legislature. The exemptions take several forms. Some exemptions are complete exemptions from CEQA. Other exemptions apply to only part of the requirements of CEQA, and still other exemptions apply only to the timing of CEQA compliance.

Note: Authority cited: Section 21083, Public Resources Code; Reference: Section 21080(b), Public Resources Code.

15261. Ongoing Project

(a) If a project being carried out by a public agency was approved prior to November 23, 1970, the project shall be exempt from CEQA unless either of the following conditions exist:

(1) A substantial portion of public funds allocated for the project have not been spent, and it is still feasible to modify the project to mitigate potentially adverse environmental effects, or to choose feasible alternatives to the project, including the alternative of "no project" or halting the project; provided that a project subject to the National Environmental Policy Act (NEPA) shall be exempt from CEQA as an on-going project if, under regulations promulgated under NEPA, the project would be too far advanced as of January 1, 1970, to require preparation of an EIS.

(2) A public agency proposes to modify the project in such a way that the project might have a new significant effect on the environment.

(b) A private project shall be exempt from CEQA if the project received approval of a lease, license, certificate, permit, or other entitlement for use from a public agency prior to April 5, 1973, subject to the following provisions:

(1) CEQA does not prohibit a public agency from considering environmental factors in connection with the approval or disapproval of a project, or from imposing reasonable fees on the appropriate private person or entity for preparing an environmental report under authority other than CEQA. Local agencies may require environmental reports for projects covered by this paragraph pursuant to local ordinances during this interim period.

(2) Where a project was approved prior to December 5, 1972, and prior to that date the project was legally challenged for noncompliance with CEQA, the project shall be bound by special rules set forth in Section 21170 of CEQA.

(3) Where a private project has been granted a discretionary governmental approval for part of the project before April 5, 1973, and another or additional discretionary governmental approvals after April 5, 1973, the project shall be subject to CEQA only if the approval or approvals after April 5, 1973, involve a greater degree of responsibility or control over the project as a whole than did the approval or approvals prior to that date.

Note: Authority cited: Section 21083, Public Resources Code; Reference: Sections 21169, 21170, and 21171, Public Resources Code; County of Inyo v. Yorty, 32 Cal. App. 3d 795.

15262. Feasibility and Planning Studies

A project involving only feasibility or planning studies for possible future actions which the agency, board, or commission has not approved, adopted, or funded does not require the preparation of an EIR or Negative Declaration but does require consideration of environmental factors. This section does not apply to the adoption of a plan that will have a legally binding effect on later activities.

Note: Authority cited: Section 21083, Public Resources Code; Reference: Sections 21102 and 21150, Public Resources Code.

15263. Discharge Requirements

The State Water Resources Control Board and the regional boards are exempt from the requirement to prepare an EIR or a Negative Declaration prior to the adoption of waste discharge requirements, except requirements for new sources as defined in the Federal Water Pollution Control Act or in other acts which amend or supplement the Federal Water Pollution Control Act. The term "waste discharge requirements" as used in this section is the equivalent of the term "permits" as used in the Federal Water Pollution Control Act.

Note: Authority cited: Section 21083, Public Resources Code; Reference: Section 13389, Water Code.

15264. Timberland Preserves

Local agencies are exempt from the requirement to prepare an EIR or Negative Declaration on the adoption of timberland preserve zones under Government Code Sections 51100 et seq. (Gov. Code, Sec. 51119).

Note: Authority cited: Section 21083, Public Resources Code; Reference: Government Code Section 51119, Government Code.

15265. Adoption of Coastal Plans and Programs

(a) CEQA does not apply to activities and approvals pursuant to the California Coastal Act (commencing with Section 30000 of the Public Resources Code) by:

(1) Any local government, as defined in Section 30109 of the Public Resources Code, necessary for the preparation and adoption of a local coastal program, or

(2) Any state university or college, as defined in Section 30119, as necessary for the preparation and adoption of a long-range land use development plan.

(b) CEQA shall apply to the certification of a local coastal program or long-range land use development plan by the California Coastal Commission.

(c) This section shifts the burden of CEQA compliance from the local agency or the state university or college to the California Coastal Commission. The Coastal Commission's program of certifying local coastal programs and long-range land use development plans has been certified under Section 21080.5, Public Resources Code. See: Section 15192.

Note: Authority cited: Section 21083, Public Resources Code; Reference: Sections 21080.9, Public Resources Code.

15266. General Plan Time Extension

CEQA shall not apply to the granting of an extension of time by the Office of Planning and Research to a city or county for the preparation and adoption of one or more elements of a city or county general plan.

Note: Authority cited: Section 21083, Public Resources Code; Reference: Section 21080.10(a), Public Resources Code.

15267. Financial Assistance to Low or Moderate Income Housing

CEQA does not apply to actions taken by the Department of and Community Development to provide financial assistance for the development and construction of residential housing for persons and families of low or moderate income, as defined in Section 50093 of the Health and Safety Code. The residential project which is the subject of the application for financial assistance will be subject to CEQA when approvals are granted by another agency.

Note: Authority cited: Section 21083, Public Resources Code; Reference: Section 21080.10(b), Public Resources Code.

15268. Ministerial Projects

(a) Ministerial projects are exempt from the requirements of CEQA. The determination of what is "ministerial" can most appropriately be made by the particular public agency involved based upon its analysis of its own laws, and each public agency should make such determination either as a part of its implementing regulations or on a case-by-case basis.

(b) In the absence of any discretionary provision contained in the local ordinance or other law establishing the requirements for the permit, license, or other entitlement for use, the following actions shall be presumed to be ministerial:

(1) Issuance of building permits.

(2) Issuance of business licenses.

(3) Approval of final subdivision maps.

(4) Approval of individual utility service connections and disconnections.

(c) Each public agency should, in its implementing regulations or ordinances, provide an identification or itemization of its projects and actions which are deemed ministerial under the applicable laws and ordinances.

(d) Where a project involves an approval that contains elements of both a ministerial action and a discretionary action, the project will be deemed to be discretionary and will be subject to the requirements of CEQA.

Note: Authority cited: Section 21083, Public Resources Code; Reference: Section 21080(b)(1), Public Resources Code; *Day v. City of Glendale*, 51 Cal. App. 3d 817.

15269. Emergency Projects

The following emergency projects are exempt from the requirements of CEQA.

(a) Projects to maintain, repair, restore, demolish, or replace property or facilities damaged or destroyed as a result of a disaster in a disaster stricken area in which a state of emergency has been proclaimed by the Governor pursuant to the California Emergency Services Act, commencing with Section 8550 of the Government Code. This includes projects that will remove, destroy, or significantly alter an historical resource when that resource represents an imminent threat to the public of bodily harm or of damage to adjacent property or when the project has received a determination by the State Office of Historic Preservation pursuant to Section 5028(b) of Public Resources Code.

(b) Emergency repairs to publicly or privately owned service facilities necessary to maintain service essential to the public health, safety or welfare.

(c) Specific actions necessary to prevent or mitigate an emergency. This does not include long-term projects undertaken for the purpose of preventing or mitigating a situation that has a low probability of occurrence in the short-term.

(d) Projects undertaken, carried out, or approved by a public agency to maintain, repair, or restore an existing highway damaged by fire, flood, storm, earthquake, land subsidence, gradual earth movement, or landslide, provided that the project is within the existing right of way of that highway and is initiated within one year of the damage occurring. This exemption does not apply to highways designated as official state scenic highways, nor any project undertaken, carried out, or approved by a public agency to expand or widen a highway damaged by fire, flood, storm, earthquake, land subsidence, gradual earth movement, or landslide.

(e) Seismic work on highways and bridges pursuant to Section 180.2 of the Streets and Highways Code, Section 180 et seq.

Note: Authority: Section 21083, Public Resources Code. Reference: Sections 21080(b)(2), (3), and (4), 21080.33 and 21172, Public Resources Code; *Castaic Lake Water Agency v. City of Santa Clarita* (1995) 41 Cal.App.4th 1257; and *Western Municipal Water District of Riverside County v. Superior Court of San Bernardino County* (1987) 187 Cal.App.3d 1104.

15270. Projects Which are Disapproved

(a) CEQA does not apply to projects which a public agency rejects or disapproves.

(b) This section is intended to allow an initial screening of projects on the merits for quick disapprovals prior to the initiation of the CEQA process where the agency can determine that the project cannot be approved.

(c) This section shall not relieve an applicant from paying the costs for an EIR or Negative Declaration prepared for his project prior to the Lead Agency's disapproval of the project after normal evaluation and processing.

Note: Authority cited: Section 21083, Public Resources Code; Reference: Section 21080(b)(5), Public Resources Code.

15271. Early Activities Related to Thermal Power Plants

(a) CEQA does not apply to actions undertaken by a public agency relating to any thermal power plant site or facility including the expenditure, obligation, or encumbrance of funds by a public agency for planning, engineering, or design purposes, or for the conditional sale or purchase of equipment, fuel, water (except groundwater), steam, or power for such a thermal power plant, if the thermal power plant site and related facility will be the subject of an EIR or Negative Declaration or other document or documents prepared pursuant to a regulatory program certified pursuant to Public Resources Code Section 21080.5, which will be prepared by:

(1) The State Energy Resources Conservation and Development Commission,

(2) The Public Utilities Commission, or

(3) The city or county in which the power plant and related facility would be located.

(b) The EIR, Negative Declaration, or other document prepared for the thermal power plant site or facility, shall include the environmental impact, if any, of the early activities described in this section.

(c) This section acts to delay the timing of CEQA compliance from the early activities of a utility to the time when a regulatory agency is requested to approve the thermal power plant and shifts the responsibility for preparing the document to the regulatory agency.

Note: Authority cited: Section 21083, Public Resources Code; Reference: Section 15080(b)(6), Public Resources Code.

15272. Olympic Games

CEQA does not apply to activities or approvals necessary to the bidding for, hosting or staging of, and funding or carrying out of, Olympic Games under the authority of the International Olympic Committee, except for the construction of facilities necessary for such Olympic Games. If the facilities are required by the International Olympic Committee as a condition of being awarded the Olympic Games, the Lead Agency need not discuss the "no project" alternative in an EIR with respect to those facilities.

Note: Authority cited: Section 21083, Public Resources Code; Reference: Section 21080(b)(7), Public

Resources Code.

15273. Rates, Tolls, Fares, and Charges

(a) CEQA does not apply to the establishment, modification, structuring, restructuring, or approval of rates, tolls, fares, or other charges by public agencies which the public agency finds are for the purpose of:

(1) Meeting operating expenses, including employee wage rates and fringe benefits,

(2) Purchasing or leasing supplies, equipment, or materials,

(3) Meeting financial reserve needs and requirements,

(4) Obtaining funds for capital projects, necessary to maintain service within existing service areas, or

(5) Obtaining funds necessary to maintain such intra-city transfers as are authorized by city charter.

(b) Rate increases to fund capital projects for the expansion of a system remain subject to CEQA. The agency granting the rate increase shall act either as the Lead Agency if no other agency has prepared environmental documents for the capital project or as a Responsible Agency if another agency has already complied with CEQA as the Lead Agency.

(c) The public agency shall incorporate written findings in the record of any proceeding in which an exemption under this section is claimed setting forth with specificity the basis for the claim of exemption.

Note: Authority cited: Section 21083, Public Resources Code; Reference: Section 21080(b)(8), Public Resources Code.

15274. Family Day Care Homes

(a) CEQA does not apply to establishment or operation of a large family day care home, which provides in-home care for up to fourteen children, as defined in Section 1596.78 of the Health and Safety Code.

(b) Under the Health and Safety Code, local agencies cannot require use permits for the establishment or operation of a small family day care home, which provides in-home care for up to eight children, and the establishment or operation of a small family day care home is a ministerial action which is not subject to CEQA.

Note: Authority cited: Section 21083, Public Resources Code; Reference: Section 21083, Public Resources Code.

15275. Specified Mass Transit Projects

CEQA does not apply to the following mass transit projects:

(a) The institution or increase of passenger or commuter service on rail lines or high-occupancy vehicle lanes already in use, including the modernization of existing stations and parking facilities;

(b) Facility extensions not to exceed four miles in length which are required for transfer of passengers from or to exclusive public mass transit guideway or busway public transit services.

Note: Authority cited: Section 21083, Public Resources Code; Reference: Section 21080(b)(11), (12), and (13), Public Resources Code.

15276. Transportation Improvement and Congestion Management Programs

(a) CEQA does not apply to the development or adoption of a regional transportation improvement program or the state transportation improvement program. Individual projects developed pursuant to these programs shall remain subject to CEQA.

(b) CEQA does not apply to preparation and adoption of a congestion management program by a county congestion management agency pursuant to Government Code Section 65089, et seq.

Note: Authority cited: Section 21083, Public Resources Code; Reference: Section 21080(b)(13), Public Resources Code.

15277. Projects Located Outside California

CEQA does not apply to any project or portion thereof located outside of California which will be subject to environmental impact review pursuant to the National Environmental Policy Act of 1969 or pursuant to a law of that state requiring preparation of a document containing essentially the same points of analysis as in an Environmental Impact Statement prepared under the National Environmental Policy Act of 1969. Any emissions or discharges that would have a significant effect on the environment in the State of California are subject to CEQA where a California public agency has authority over the emissions or discharges.

Note: Authority cited: Section 21083, Public Resources Code; Reference: Section 21080(b)(15), Public Resources Code; 58 Opinions of the California Attorney General 614 (S.O. 75/50).

15278. Application of Coatings

(a) CEQA does not apply to a discretionary decision by an air quality management district for a project consisting of the application of coatings within an existing facility at an automotive manufacturing plant if the district finds all of the following:

(1) The project will not cause a net increase in any emissions of any pollutant for which a national or state ambient air quality standard has been established after the internal emission accounting for previous emission reductions achieved at the facility and recognized by the district.

(2) The project will not cause a net increase in adverse impacts of toxic air contaminants as determined by a health risk assessment. The term "net increase in adverse impacts of toxic air contaminants as determined by a health risk assessment" shall be determined in accordance with the rules and regulations of the district.

(3) The project will not cause any other adverse effect on the environment.

(b) The district shall provide a 10-day notice, at the time of the issuance of the permit, of any such exemption. Notice shall be published in two newspapers of general circulation in the area of the project

and shall be mailed to any person who makes a written request for such a notice. The notice shall state that the complete file on the project and the basis for the district's findings of exemption are available for inspection and copying at the office of the district.

(c) Any person may appeal the issuance of a permit based on an exemption under subdivision (a) to the hearing board as provided in Section 42302.1 of the Health and Safety Code. The permit shall be revoked by the hearing board if there is substantial evidence in light of the whole record before the board that the project may not satisfy one or more of the criteria established pursuant to subdivision (a). If there is no such substantial evidence, the exemption shall be upheld. Any appeal under this subdivision shall be scheduled for hearing on the calendar of the hearing board within 10 working days of the appeal being filed. The hearing board shall give the appeal priority on its calendar and shall render a decision on the appeal within 21 working days of the appeal being filed. The hearing board may delegate the authority to hear and decide such an appeal to a subcommittee of its body.

Note: Authority cited: Section 21083, Public Resources Code; Reference: Chapter 1131, Statutes of 1993, Section 1.

[15279 Removed]

[15280 Removed]

15281. Air Quality Permits

CEQA does not apply to the issuance, modification, amendment, or renewal of any permit by an air pollution control district or air quality management district pursuant to Title V, as defined in Section 39053.3 of the Health and Safety Code, or pursuant to an air district Title V program established under Sections 42301.10, 42301.11, and 42301.12 of the Health and Safety Code, unless the issuance, modification, amendment, or renewal authorizes a physical or operational change to a source or facility.

Note: Authority cited: Section 21083, Public Resources Code; Reference: Section 21080.24, Public Resources Code.

15282. Other Statutory Exemptions

The following is a list of existing statutory exemptions. Each subdivision summarizes statutory exemptions found in the California Code. Lead agencies are not to rely on the language contained in the summaries below but must rely on the actual statutory language that creates the exemption. This list is intended to assist lead agencies in finding them, but not as a substitute for them. This section is merely a reference tool.

(a) The notification of discovery of Native American burial sites as set forth in Section 5097.98(c) of the Public Resources Code .

(b) Specified prison facilities as set forth in Sections 21080.01, 21080.02, 21080.03 and 21080.07 of the Public Resources Code.

(c) The lease or purchase of the rail right-of-way used for the San Francisco Peninsula commute service between San Francisco and San Jose as set forth in Section 21080.05 of the Public Resources Code.

(d) Any activity or approval necessary for or incidental to project funding or authorization for the expenditure of funds for the project, by the Rural Economic Development Infrastructure Panel as set forth in Section 21080.08 of the Public Resources Code.

(e) The conversion of an existing rental mobilehome park to a resident initiated subdivision, cooperative, or condominium for mobilehomes as set forth in Section 21080.8 of the Public Resources Code.

(f) Settlements of title and boundary problems by the State Lands Commission and to exchanges or leases in connection with those settlements as set forth in Section 21080.11 of the Public Resources Code.

(g) Any railroad grade separation project which eliminates an existing grade crossing or which reconstructs an existing grade separation as set forth in Section 21080.13 of the Public Resources Code.

(h) The adoption of an ordinance regarding second units in a single-family or multifamily residential zone by a city or county to implement the provisions of Sections 65852.1 and 65852.2 of the Government Code as set forth in Section 21080.17 of the Public Resources Code .

(i) The closing of any public school or the transfer of students from that public school to another school in which kindergarten or any grades 1 through 12 is maintained as set forth in 21080.18 of the Public Resources Code.

(j) A project for restriping streets or highways to relieve traffic congestion as set forth in Section 21080.19 of the Public Resources Code.

(k) The installation of new pipeline or maintenance, repair, restoration, removal, or demolition of an existing pipeline as set forth in Section 21080.21 of the Public Resources Code, as long as the project does not exceed one mile in length.

(l) The activities and approvals by a local government necessary for the preparation of general plan amendments pursuant to Public Resources Code §29763 as set forth in Section 21080.22 of the Public Resources Code. Section 29763 of the Public Resources Code refers to local government amendments made for consistency with the Delta Protection Commission's regional plan.

(m) Minor alterations to utilities made for the purposes of complying with Sections 116410 and 116415 of the Health and Safety Code as set forth in Section 21080.26 of the Public Resources Code.

(n) The adoption of an ordinance exempting a city or county from the provisions of the Solar Shade Control Act as set forth in Section 25985 of the Public Resources Code.

(o) The acquisition of land by the Department of Transportation if received or acquired within a statewide or regional priority corridor designated pursuant to Section 65081.3 of the Government Code as set forth in Section 33911 of the Public Resources Code .

(p) The adoption or amendment of a nondisposal facility element as set forth in Section 41735 of the Public Resources Code.

(q) Cooperative agreements for the development of Solid Waste Management Facilities on Indian country as set forth in Section 44203(g) of the Public Resources Code .

(r) Determinations made regarding a city or county's regional housing needs as set forth in Section 65584 of the Government Code.

(s) Any action necessary to bring a general plan or relevant mandatory element of the general plan into compliance pursuant to a court order as set forth in Section 65759 of the Government Code.

(t) Industrial Development Authority activities as set forth in Section 91543 of the Government Code .

(u) Temporary changes in the point of diversion, place of use, of purpose of use due to a transfer or exchange of water or water rights as set forth in Section 1729 of the Water Code.

(v) The preparation and adoption of Urban Water Management Plans pursuant to the provisions of Section 10652 of the Water Code.

Note: Authority: Section 21083, Public Resources Code; References: Sections 5097.98(c), 21080.01, 21080.02, 21080.03, 21080.05, 21080.07, 21080.08, 21080.7, 21080.8, 21080.11, 21080.13, 21080.17, 21080.18, 21080.19, 21080.21, 21080.22, 21080.26, 25985, 33911, 41735, and 44203(g), Public Resources Code.

15283. Housing Needs Allocation.

CEQA does not apply to regional housing needs determinations made by the Department of Housing and Community Development, a council of governments, or a city or county pursuant to Section 65584 of the Government Code.

Note: Authority cited: Section 21083, Public Resources Code. Reference: Section 65584, Government Code.

15284. Pipelines.

(a) CEQA does not apply to any project consisting of the inspection, maintenance, repair, restoration, reconditioning, relocation, replacement, or removal of an existing hazardous or volatile liquid pipeline or any valve, flange, meter, or other piece of equipment that is directly attached to the pipeline.

(b) To qualify for this exemption, the diameter of the affected pipeline must not be increased and the project must be located outside the boundaries of an oil refinery. The project must also meet all of the following criteria:

(1) The affected section of pipeline is less than eight miles in length and actual construction and excavation activities are not undertaken over a length of more than one-half mile at a time.

(2) The affected section of pipeline is not less than eight miles distance from any section of pipeline that had been subject to this exemption in the previous 12 months.

(3) The project is not solely for the purpose of excavating soil that is contaminated by hazardous materials.

(4) To the extent not otherwise required by law, the person undertaking the project has, in advance of undertaking the project, prepared a plan that will result in notification of the appropriate agencies so that they may take action, if necessary, to provide for the emergency evacuation of members of the public who may be located in close proximity to the project, and those agencies, including but not limited to the local fire department, police, sheriff, and California Highway Patrol as appropriate, have reviewed and agreed to that plan.

(5) Project activities take place within an existing right-of-way and that right-of-way will be restored to its pre-project condition upon completion of the project.

(6) The project applicant will comply with all conditions otherwise authorized by law, imposed by the city or county as part of any local agency permit process, and to comply with the Keene-Nejedly California Wetlands Preservation Act (Public Resources Code Section 5810, et seq.), the California Endangered Species Act (Fish and Game Code Section 2050, et seq.), other applicable state laws, and all applicable federal laws.

(c) When the lead agency determines that a project meets all of the criteria of subdivisions (a) and (b), the party undertaking the project shall do all of the following:

(1) Notify in writing all responsible and trustee agencies, as well as any public agency with environmental, public health protection, or emergency response authority, of the lead agency's invocation of this exemption.

(2) Mail notice of the project to the last known name and address of all organizations and individuals who have previously requested such notice and notify the public in the affected area by at least one of the following procedures:

(A) Publication at least one time in a newspaper of general circulation in the area affected by the proposed project. If more than one area is affected, the notice shall be published in the newspaper of largest circulation from among the newspapers of general circulation in those areas.

(B) Posting of notice on and off site in the area where the project is to be located.

(C) Direct mailing to the owners and occupants of contiguous property shown on the latest equalized assessment roll.

The notice shall include a brief description of the proposed project and its location, and the date, time, and place of any public meetings or hearings on the proposed project. This notice may be combined with the public notice required under other law, as applicable, but shall meet the preceding minimum requirements.

(3) In the case of private rights-of-way over private property, receive from the underlying property owner permission for access to the property.

(4) Immediately inform the lead agency if any soil contaminated with hazardous materials is discovered.

(5) Comply with all conditions otherwise authorized by law, imposed by the city or county as part of any local agency permit process, and to comply with the Keene-Nejedly California Wetlands Preservation Act (Public Resources Code Section 5810, et seq.), the California Endangered Species Act (Fish and Game Code Section 2050, et seq.), other applicable state laws, and all applicable federal laws.

(d) For purposes of this section, "pipeline" is used as defined in subdivision (a) of Government Code Section 51010.5. This definition includes every intrastate pipeline used for the transportation of hazardous liquid substances or highly volatile liquid substances, including a common carrier pipeline, and all piping containing those substances located within a refined products bulk loading facility which is owned by a common carrier and is served by a pipeline of that common carrier, and the common carrier owns and serves by pipeline at least five such facilities in California.

Note: Authority cited: Section 21083, Public Resources Code. Reference: Section 21080.23, Public Resources Code.

15285. Transit Agency Responses to Revenue Shortfalls.

(a) CEQA does not apply to actions taken on or after July 1, 1995 to implement budget reductions made by a publicly owned transit agency as a result of a fiscal emergency caused by the failure of agency revenues to adequately fund agency programs and facilities. Actions shall be limited to those directly undertaken by or financially supported in whole or in part by the transit agency pursuant to Section 15378(a)(1) or (2), including actions which reduce or eliminate the availability of an existing publicly owned transit service, facility, program, or activity.

(b) When invoking this exemption, the transit agency shall make a specific finding that there is a fiscal emergency. Before taking its proposed budgetary actions and making the finding of fiscal emergency, the transit agency shall hold a public hearing. After this public hearing, the transit agency shall respond within 30 days at a regular public meeting to suggestions made by the public at that initial hearing. The transit agency may make the finding of fiscal emergency only after it has responded to public suggestions.

(c) For purposes of this subdivision, "fiscal emergency" means that the transit agency is projected to have negative working capital within one year from the date that the agency finds that a fiscal emergency exists. "Working capital" is defined as the sum of all unrestricted cash, unrestricted short-term investments, and unrestricted short-term accounts receivable, minus unrestricted accounts payable. Employee retirements funds, including deferred compensation plans and Section 401(k) plans, health insurance reserves, bond payment reserves, workers' compensation reserves, and insurance reserves shall not be included as working capital.

(d) This exemption does not apply to the action of any publicly owned transit agency to reduce or eliminate a transit service, facility, program, or activity that was approved or adopted as a mitigation measure in any environmental document certified or adopted by any public agency under either CEQA or NEPA. Further, it does not apply to actions of the Los Angeles County Metropolitan Transportation Authority.

Note: Authority cited: Section 21083, Public Resources Code. References: Sections 21080 and 21080.32, Public Resources Code.

ELECTRONIC CODE OF FEDERAL REGULATIONS

e-CFR Data is current as of February 2, 2014

Title 40: Protection of Environment
PART 401—GENERAL PROVISIONS

---

§401.15 Toxic pollutants.

The following comprise the list of toxic pollutants designated pursuant to section 307(a)(1) of the Act:

1. Acenaphthene

2. Acrolein

3. Acrylonitrile

4. Aldrin/Dieldrin[1]

[1]Effluent standard promulgated (40 CFR part 129).

5. Antimony and compounds[2]

[2]The term *compounds* shall include organic and inorganic compounds.

6. Arsenic and compounds

7. Asbestos

8. Benzene

9. Benzidine[1]

10. Beryllium and compounds

11. Cadmium and compounds

12. Carbon tetrachloride

13. Chlordane (technical mixture and metabolites)

14. Chlorinated benzenes (other than di-chlorobenzenes)

15. Chlorinated ethanes (including 1,2-di-chloroethane, 1,1,1-trichloroethane, and hexachloroethane)

16. Chloroalkyl ethers (chloroethyl and mixed ethers)

17. Chlorinated naphthalene

18. Chlorinated phenols (other than those listed elsewhere; includes trichlorophenols and chlorinated cresols)

19. Chloroform

20. 2-chlorophenol

21. Chromium and compounds

22. Copper and compounds
23. Cyanides
24. DDT and metabolites[1]
25. Dichlorobenzenes (1,2-, 1,3-, and 1,4-di-chlorobenzenes)
26. Dichlorobenzidine
27. Dichloroethylenes (1,1-, and 1,2-dichloroethylene)
28. 2,4-dichlorophenol
29. Dichloropropane and dichloropropene
30. 2,4-dimethylphenol
31. Dinitrotoluene
32. Diphenylhydrazine
33. Endosulfan and metabolites
34. Endrin and metabolites[1]
35. Ethylbenzene
36. Fluoranthene
37. Haloethers (other than those listed elsewhere; includes chlorophenylphenyl ethers, bromophenylphenyl ether, bis(dichloroisopropyl) ether, bis-(chloroethoxy) methane and polychlorinated diphenyl ethers)
38. Halomethanes (other than those listed elsewhere; includes methylene chloride, methylchloride, methylbromide, bromoform, dichlorobromomethane
39. Heptachlor and metabolites
40. Hexachlorobutadiene
41. Hexachlorocyclohexane
42. Hexachlorocyclopentadiene
43. Isophorone
44. Lead and compounds
45. Mercury and compounds
46. Naphthalene
47. Nickel and compounds
48. Nitrobenzene
49. Nitrophenols (including 2,4-dinitrophenol, dinitrocresol)
50. Nitrosamines
51. Pentachlorophenol
52. Phenol
53. Phthalate esters
54. Polychlorinated biphenyls (PCBs)[1]

55. Polynuclear aromatic hydrocarbons (including benzanthracenes, benzopyrenes, benzofluoranthene, chrysenes, dibenz-anthracenes, and indenopyrenes)

56. Selenium and compounds

57. Silver and compounds

58. 2,3,7,8-tetrachlorodibenzo-p-dioxin (TCDD)

59. Tetrachloroethylene

60. Thallium and compounds

61. Toluene

62. Toxaphene[1]

63. Trichloroethylene

64. Vinyl chloride

65. Zinc and compounds

[44 FR 44502, July 30, 1979, as amended at 46 FR 2266, Jan. 8, 1981; 46 FR 10724, Feb. 4, 1981]

For questions or comments regarding e-CFR editorial content, features, or design, email ecfr@nara.gov.
For questions concerning e-CFR programming and delivery issues, email webteam@gpo.gov.

The Field Sampling Kit contains:

- Sampling SOP
- Cooler with ice pack
- Personal Protective Equipment:
    - Latex gloves
    - Safety glasses
    - Hand sanitizer
- Portable DO/pH/temperature meter
- Velocity probe
- 3 – BOD sample bottles (½ gallon sterilized bottles)
- 3 – Ammonia/Nitrogen sample bottles (quart-sized sterilized bottles)
- 3 – TP04 sample bottles (250 ml glass jars)
- 3 – Total/Fecal Coliform sample bottles (100 ml sterilized bottles)
- Warning signs
- Sharpie
- Ballpoint pen
- Disposable camera
- Chain of Custody form

(THIS PAGE INTENTIONALLY LEFT BLANK)

APPENDIX O

FOG Outreach Materials

List of Grease Haulers for Alameda County

A-1 Septic Tank Service	(510) 697-8083
A-1 Septic Tank Service	(800) 730-4471
All Valley Environmental, Inc.	(559) 498-8378
Able Septic	(408) 377-9990
Ameriguard Maintenance Services	(800) 347-7876 ext 14
Bay Area Restaurant Services LLC	(888) 994-0753
Bay Pumping	(831) 320 5229
Burr Plumbing & Pumping	(408) 287-2877
Darling International	(800) 473-4890
Evergreen Recycling, Inc.	(650) 952-5000
Interstate Restaurant Services	(844) 434-4343
Liquid Environmental Solutions	(866)-694-7327
Magnum Fire Protection	(510) 742-0775
Miller & Gibson (prev Able Septic Tank Service)	(408) 377-9990
Miller & Gibson (prev Able Septic Tank Service)	(408) 398-4990
ModestoTallow/Florin Tallow Co.	(209) 522-7224
ModestoTallow/Florin Tallow Co.	(800) 564-7204
One More Time	(800) 624-5504
Pioneer Liquid Transport	(800) 804-7327
Portosan Santa Rosa	(707) 566-2000
Rescue Rooter	(800) 869-6917
Roto Rooter	(800) 269-3747
Sacramento Rendering Co.	(800) 339-6493
Salinas Tallow	(800) 621-9000
San Jose Tallow	(408) 452-8777
SeQuential	(800) 447-3794
Trap Cleaners	(510) 375-2622

This list is not comprehensive, nor does it endorse any company.
This is provided as a reference only.

Gravity Grease Interceptor (GGI)
Fact Sheet

Gravity grease interceptors (GGIs) treat kitchen wastewater from food service establishments (FSEs) using gravity separation. They accumulate fats, oil and grease (FOG) and solids over time allowing the treated wastewater to discharge to the sanitary sewer (see the figure below).

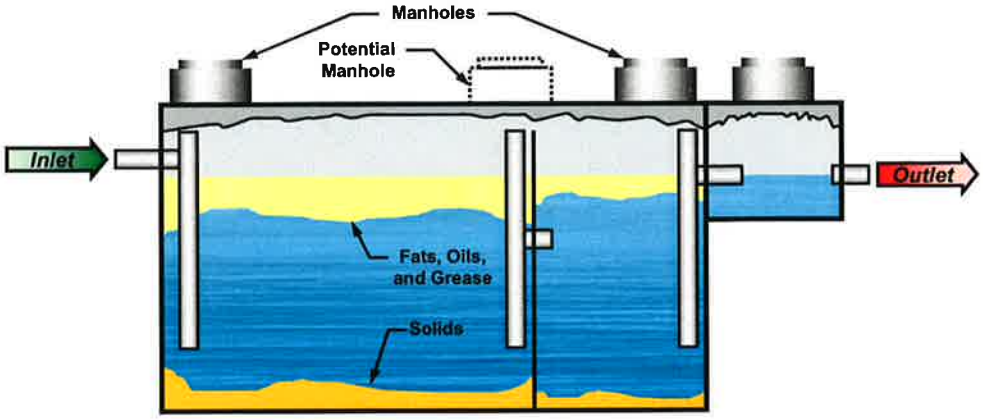

Gravity Grease Interceptor
Outdoor, In-ground
500 – 1,500 Gallons (Typical)

Design and Sizing

GGIs are made of precast concrete, steel, fiberglass or PVC and are sized according to the Uniform Plumbing Code (UPC). Chapter 10, Table 10-3 of the 2006 and 2009 UPC sizes GGIs based on the number of drainage fixture units (DFUs) connected to the interceptor. Typically, GGIs are 500 - 1,500 gallons in volume, depending upon the number of kitchen drains connected.

Certification and Approval

The International Association of Plumbing and Mechanical Officials (IAPMO) provides certifications for a wide variety of GGI products and sizes. Agencies often require that GGIs be certified by IAPMO before they can be approved for use in their service area.

Proper Maintenance and The 25% Rule

Many California sewering agencies require that GGIs be cleaned (pumped) out completely at a mandatory minimum frequency of once every 90 days to prevent the over-accumulation of floating FOG and settled solids. A complete pump-out means that all of the contents of the interceptor must be pumped out and no liquids can be returned to the interceptor unless specific permission has been granted in writing by the sewering agency for this practice. Some GGIs may need to be pumped out more frequently than once every 90 days if the floating FOG and settled solids accumulation exceeds 25% of the overall capacity of the interceptor prior to the 90 day period (i.e, the 25% Rule).

Inspections

Agency inspections should focus on making sure that the GGI is working properly and that the internal plumbing and baffle walls are intact. If an inspector determines that the floating FOG and settled solids accumulation is excessive in the GGI, they will typically notify the FSE that the GGI must be pumped more often. FSEs are often required to save pumper receipts or maintain logs to show the inspector that the proper maintenance is being conducted.

Grease Removal Device (GRD)
Fact Sheet

Grease Removal Devices (GRDs) are a type of hydromechanical grease interceptor (HGI) that treats kitchen wastewater from food service establishments (FSEs) and are equipped with automatic grease removal features. They are typically installed indoors and connected to one to four sinks in the kitchen. They accumulate fats, oil and grease (FOG) in a relatively small separator tank. The accumulated FOG is automatically removed from the GRD and transferred to a separate FOG waste container reducing the need for cleaning (see the figure below).

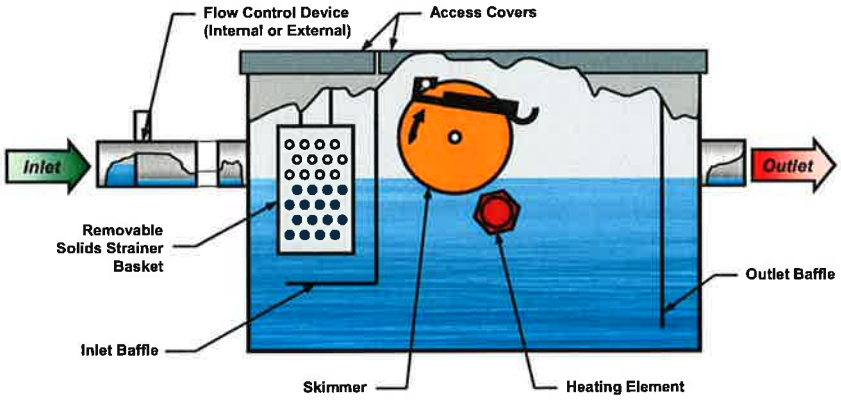

Grease Removal Device
Skimmer Style Shown. Other Style Units are Available
Indoor, Above Ground (Typical)
15-60 Gallons (Typical), 20-50 GPM (Typical)

Design and Sizing

GRDs are typically made of corrosion resistant materials and are equipped with baffles, screens, and external waste containers to store the removed FOG waste. Some are equipped with heaters, skimmers, pumps or hydrostatic pressure chambers to assist in removal of the FOG. They are sized according to the same HGIs Uniform Plumbing Code (UPC) sizing methods that are used for match (Chapter 10, Table 10-2). Flow control devices must be installed internal or external of GRDs to control the wastewater flow to the certified flow rate of the GRD.

Certification and Approval

GRDs are tested and certified to ASME A112.14.3 and ASME A112.14.4 standards at the GRD's specified maximum flow rate. Sewering agencies often require that GRDs be certified to these standards before they can be approved for use in their service area. Plan check approvals should make sure that one or more GRDs are connected to all the significant grease waste drains (e.g., pot sink, pre-rinse sink, wok station).

Proper Maintenance

GRDs should be maintained through daily emptying of the solids basket into the trash and emptying the FOG waste container into a larger FOG waste container for proper disposal or recycling. Because many GRDs have heaters and skimmers and other critical mechanical equipment, these must be maintained by the FSE and cleaned or replaced, as needed.

Inspections

Agency inspections should focus on making sure that the GRDs are in proper working order and are being maintained frequently enough to prevent an over-accumulation of FOG and solids. Inspectors will typically notify the FSE if the GRD needs more frequent cleaning or maintenance. FSEs are often required to maintain logs to show the inspector that the proper maintenance is being performed.

Hydromechanical Grease Interceptor (HGI)
Fact Sheet

Hydromechanical grease interceptors (HGIs) (formerly named grease traps) treat kitchen wastewater from food service establishments (FSEs) using gravity separation aided by vented flow control. They are typically installed indoors and connected to one to four sinks in the kitchen. They accumulate fats, oil and grease (FOG) and solids over time in a relatively small separator tank allowing the treated wastewater to discharge to the sanitary sewer (see the figure below).

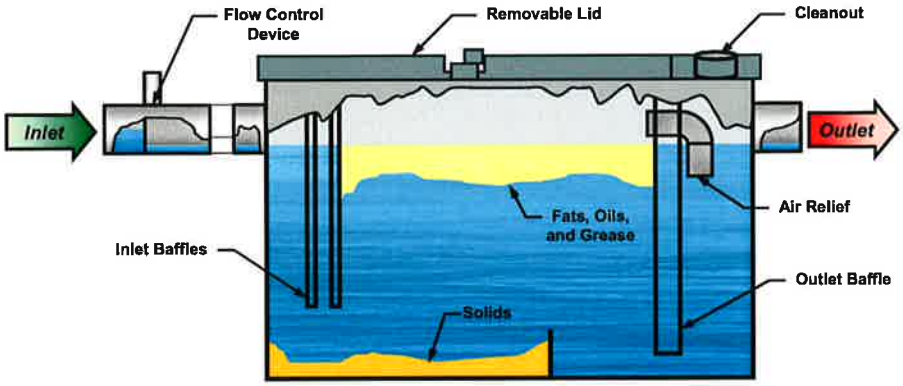

Hydromechanical Grease Interceptor
Indoor, Above Ground (Typical)
15-60 Gallons, 20-50 GPM (Typical)
40-100 Pounds of FOG Storage (Typical)

Design and Sizing

HGIs are made of steel, fiberglass or polyethylene, typically consisting of a single compartment with baffles, and sized according to the Uniform Plumbing Code (UPC). Chapter 10, Table 10-2 of the 2006 UPC and the 2009 UPC provide two different sizing methods for HGIs. Regardless of the sizing method, HGIs are sized based on flow rate and the pounds of FOG that they can store. Typically, they treat 20-50 gallons per minute (GPM), store 40-100 pounds of FOG, and are 15-60 gallons in volume. Vented flow control devices must be installed upstream of HGIs to control the wastewater flow to match the certified flow rate of the HGI. If this flow control device is not installed, the HGI may not perform properly when the flow exceeds the certified flow rate.

Certification and Approval

HGIs are tested and certified to ASME A112.14.3 or PDI-G101 standards at the HGI's specified maximum flow rate. Sewering agencies often require that HGIs be certified to these standards before they can be approved for use in their service area. Plan check approvals should make sure that one or more HGIs are connected to all the significant grease waste drains (e.g., pot sink, pre-rinse sink, wok station).

Proper Maintenance

HGIs should be cleaned before the floating FOG and settled solids accumulation exceeds 25% of the HGI's overall capacity. In order to prevent this, daily to weekly cleaning of the HGI by kitchen staff or pumping contractors may be required to ensure proper operation. If performed by kitchen staff, solids and FOG should be dewatered (e.g., mixed with kitty litter) and discarded in the trash.

Inspections

Agency inspections should focus on making sure that the HGIs are in proper working order and are being cleaned frequently enough to prevent an over-accumulation of FOG and solids. Inspectors will typically notify the FSE if the HGI needs more frequent cleaning or maintenance. FSEs are often required to save pumper receipts or maintain logs to show the inspector that the proper maintenance is being performed.

FATS, OILS, AND GREASE (FOG) PROGRAM

GREASE REMOVAL DEVICE MAINTENANCE REPORTING FORM

ESTABLISHMENT NAME: _____

DATE	CLEANING PREFORMED BY: (COMPANY OR EMPLOYEE NAME)	GALLONS REMOVED	MANAGER'S SIGNATURE

(THIS PAGE INTENTIONALLY LEFT BLANK)

APPENDIX P

Wastewater Collection System Master Plan

CASTRO VALLEY SANITARY DISTRICT

Wastewater Collection System Master Plan Update

MARCH 2016

WEST YOST ASSOCIATES

Wastewater Collection System Master Plan Update

Prepared for

Castro Valley Sanitation District

March 2016

WEST YOST ASSOCIATES
Consulting Engineers

455-06-13-03

REGISTERED PROFESSIONAL ENGINEER
LANI GOOD
C 73677
EXP. 3/31/17
CIVIL
STATE OF CALIFORNIA

Lani Good

This report printed on 50% post-consumer paper

Table of Contents

1.0 Introduction 1

2.0 Background Information 1

2.1 Sources of Information 1

2.2 Existing System Description 2

2.3 Previous Master Plans 2

2.3.1 2006 Master Plan 2

2.3.2 Master Plan Updates Phase 1 – Preliminary Design Report 4

2.3.3 Master Plan Update Phase 2 – Alternatives Evaluation 4

3.0 Wastewater Flows 4

3.1 Wastewater Flow Components 4

3.1.1 CVSan RDII Levels 5

3.1.2 Sources of RDII 6

3.1.3 Inflow Indicators 6

3.1.4 Infiltration Indicators 7

3.2 2015 Flow Monitoring Study 8

3.2.1 Flow Metering Sites 8

3.2.2 Rainfall Results 10

3.2.3 Flow Metering Results 11

3.3 Flume Flows 12

4.0 Hydraulic Model Updates 12

4.1 Model Network Updates 15

4.1.1 System Improvements 15

4.1.2 Asset Registry Updates 15

4.1.3 Flow Splits 15

4.2 Dry Weather Model Calibration 15

4.3 Wet Weather Model Calibration 19

5.0 Capacity Analysis 22

5.1 Design Storm 22

5.2 Dry Weather Performance 23

5.3 Wet Weather Performance 23

6.0 Updated Capital Improvement recommendations 25

6.1 Recommended Capital Improvement Program 25

6.2 Sensitivity Analysis 29

6.3 Other Recommendations 30

6.3.1 Ongoing Monitoring 30

6.3.2 Inflow Reduction Program 30

6.3.3 Private Lateral Rehabilitation Program 33

6.3.4 Hydraulic Model Update 33

Table of Contents

List of Appendices

Appendix A: Flow Split Documentation
Appendix B: Dry Weather Calibration Plots
Appendix C: Wet Weather Calibration Plots
Appendix D: Capital Improvement Project Sheets
Appendix E: CIP Project Hydraulic Profiles
Appendix F: 2015 Smoke Testing Work Plan
Appendix G: 2012 Smoke Testing Defects

List of Tables

Table 1. CVSan Collection System Pipe Lengths and Materials 2
Table 2. 2014/2015 Flow Monitoring Locations 8
Table 3. Storm Period Rainfall Totals 10
Table 4. Capacity Analysis Summary 12
Table 5. Dry Weather Calibration Results 18
Table 6. Land Use Flow Factors 19
Table 7. Recommended Capacity Improvement Projects 26

List of Figures

Figure 1. Existing Collection System 3
Figure 2. Wastewater Components for Typical PWWF Conditions 5
Figure 3. Typical Sources of RDII 6
Figure 4. 2014/15 Flow Meter Locations 9
Figure 5. Storm Event Classification at RG-A and RG-B 11
Figure 6. CVSan Flume versus 5-Site Aggregate Flows, 15-Minute Data 13
Figure 7. Daily Average Flows: Flume versus 5-Site Aggregate 14
Figure 8. Model Network Updates 16
Figure 9. ADWF Comparison: Metered versus Modeled Flow 17
Figure 10. Calibrated R-Factors for PWWF Conditions 20
Figure 11. PWWF Comparison: Metered versus Modeled Flow 21
Figure 12. Design Storm Distribution 22
Figure 13. Dry Weather Capacity Analysis Results 24
Figure 14. PWWF Capacity Analysis Results 27
Figure 15. Recommended Capital Improvement Projects 28
Figure 16. SCS Type 1A Design Storm Distribution 29
Figure 17. Recommended Monitoring for South of I-580 Project Validation 31
Figure 18. I/I Identified by Sub-basin Flow Monitoring at M-3W 32

1.0 INTRODUCTION

The purpose of this Wastewater Collection System Master Plan Update (this report) is to validate the Castro Valley Sanitary District (CVSan) hydraulic capacity upgrade projects identified in the previous master planning documents using recently-collected flow monitoring data, and to update the CVSan capital improvement plan (CIP) with the resulting hydraulic capacity upgrade projects.

This report is intended to serve in parallel with the 2015 CVSan Gravity Sewer Asset Management Plan. That report addresses issues related to maintaining and improving collection system facilities based on condition assessment information, whereas this report is primarily intended to address system capacity concerns.

This report is organized to address the key topics covered in previous master planning documents. Accordingly, this report consists of the following sections:

- Background Information
- Wastewater Flows
- Hydraulic Model Updates
- Capacity Analysis
- Updated Capital Improvement Recommendations

2.0 BACKGROUND INFORMATION

This section discusses key background information including sources of information, an existing system description, and previous CVSan master plans.

2.1 Sources of Information

The following documents and information were provided by CVSan and are used in this analysis:

- Castro Valley Sanitary District Wastewater Collection System Master Plan by Brown and Caldwell, dated June 2, 2006 (2006 Master Plan)
- Collection System Master Plan Update Phase 1 by Castro Valley Sanitary District, dated December 19, 2011 (Phase 1 – Preliminary Design Report)
- Collection System Master Plan Update Phase 2 by Castro Valley Sanitary District, dated November 26, 2012 (Phase 2 – Alternatives Analysis)
- CVSan Graphic Information Systems wastewater asset layers, provided by CVSan staff on December 17, 2015
- Castro Valley Sanitary District Sewer Flow Monitoring And Inflow / Infiltration Study (2015 Flow Monitoring Study), dated June 2015

2.2 Existing System Description

CVSan is a Special District whose purpose is to manage the collection system facilities in the unincorporated community of Castro Valley, located in Alameda County. CVSan's collection system conveys approximately 3.2 million gallons per day (mgd) of wastewater average daily dry weather flow (ADWF) from a population of 61,388, based on the 2010 census. The conveyed wastewater is ultimately treated by the Castro Valley/Oro Loma Sanitary District Wastewater Treatment Plant in San Lorenzo. The CVSan collection system consists of approximately 148 miles of gravity sewer pipe, the majority of which is vitrified clay pipe (VCP), as shown in Table 1, plus 1.8 miles of force main and eight pump stations. The existing system is depicted in Figure 1.

Table 1. CVSan Collection System Pipe Lengths and Materials

Material Type	Length of Pipe (LF)	% of System
Ductile Iron Pipe	17,276	2.2
Vitrified Clay Pipe	737,278	94.3
Other Materials	19,986	2.6
Unknown	7,647	1.0
Total	**782,187 (148 miles)**	**100**

2.3 Previous Master Plans

This section describes the key previous CVSan master planning documents, which include:

- 2006 Master Plan
- Master Plan Update Phase 1 – Preliminary Design Report
- Master Plan Update Phase 2 – Alternatives Analysis

2.3.1 2006 Master Plan

The 2006 Master Plan used the following methodologies to evaluate the capacity and condition deficiencies of the system:

1. Peak wet weather flow (PWWF) was projected using a 10-year, 24-hour design storm based on Alameda County rainfall data.
2. Flow monitoring data were collected in 2005/2006 District-wide from various sub-basins to calibrate a hydraulic model that simulated the performance of the collection system under average dry weather and peak wet weather conditions. The Data from the existing CVSan flume that measures flows at the downstream end of the system were also used in the analysis.
3. Minor surcharging was considered to be allowable during the 10-year, 24-hour design storm. Gravity pipes were considered deficient if surcharging occurred 0.5 feet above the crown of shallow sewers (i.e., with less than five feet of cover) and 2.0 feet above the crown of deeper sewers (i.e., with greater than five feet of cover).

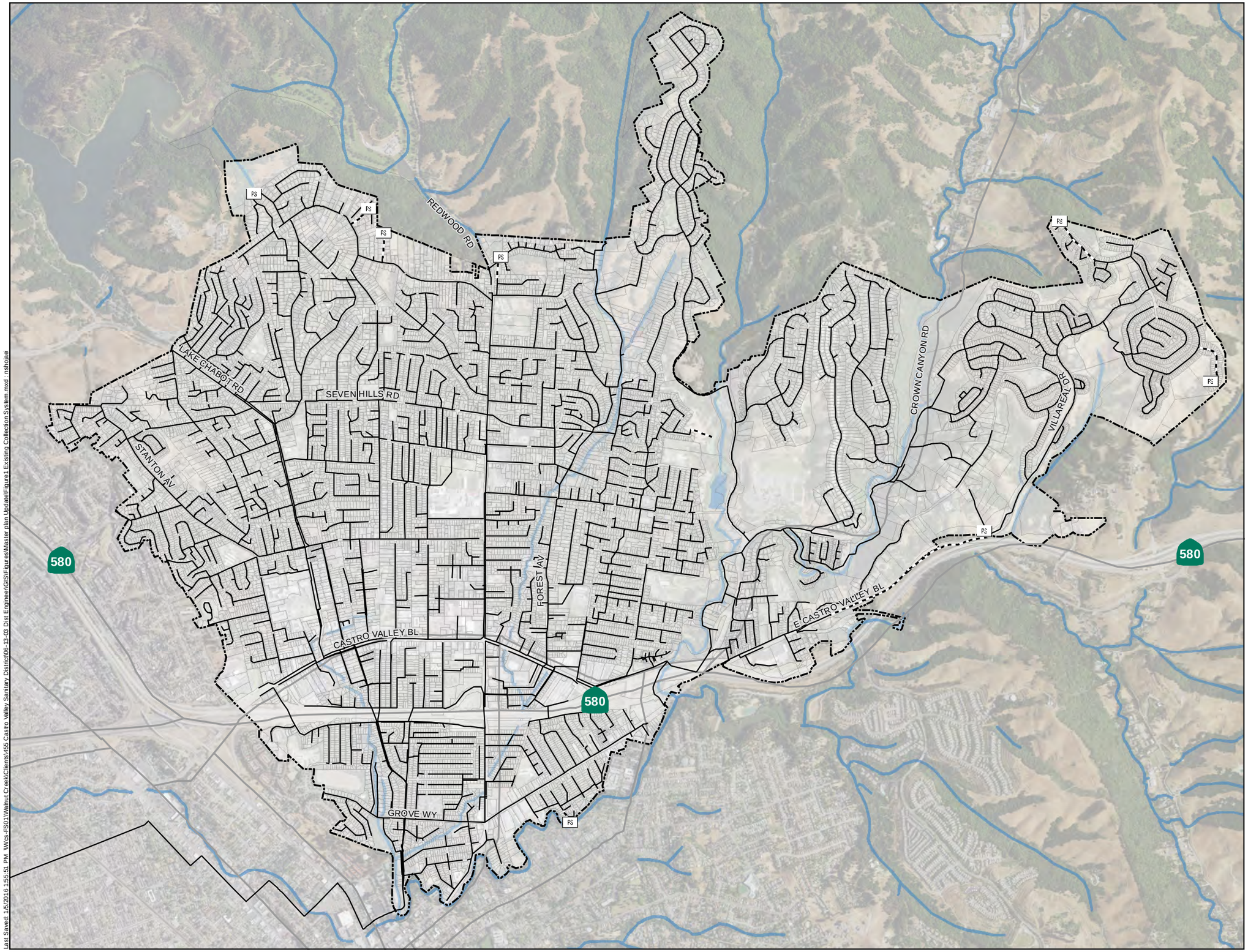

Symbology

- Gravity Main
- Pump Station
- Force Main
- District Boundary

Figure 1

Existing Collection System

Castro Valley Sanitary District
WWCS Master Plan Update

Last Saved: 1/5/2016 1:55:51 PM WVos-FS01\Walnut Creek\Clients\455 Castro Valley Sanitary District\06-13-03 Dist Engineer\GIS\Figures\Master plan Update\Figure1 Existing Collection System.mxd nshojaei

4. Pump stations were considered deficient if the PWWF during the 10-year, 24-hour design storm exceed the pump station firm capacity (i.e., with one pump out of service). Force mains were considered deficient if the maximum velocity of 7 feet per second (fps) is exceeded during PWWF conditions.
5. Condition assessment data of 69 percent of the system collected by CVSan between 1997 and 2006 was used to prioritize condition improvements. Prior to 2007, CVSan used a proprietary VHS-based CCTV data collection software that integrated with Hansen, CVSan's CMMS software. A review of the condition data revealed significant discrepancies in the database due to miscoding and a lack of quality control in CCTV data collected prior to 2007. Since 2007, CVSan has implemented the uniform, industry-standard NASSCO condition assessment rating system, and currently has NASSCO-certified CCTV operators that provide CVSan with more uniform, higher-quality condition data.

The 2006 Master Plan projected a PWWF of approximately 35 mgd at the downstream end of the system during the 10-year, 24-hour design storm. That report also identified capital improvement projects that were prioritized into five categories based on the potential for SSOs and other considerations.

2.3.2 Master Plan Updates Phase 1 – Preliminary Design Report

Phase 1 of the Master Plan Update served as a preliminary design report for the repair projects identified in the 2006 Master Plan. Because of missing or inadequate video records for the majority of the repair projects specified in the 2006 Master Plan, 36 percent of those projects were reviewed, with the result that 51 pipe segments were confirmed as needing repair or replacement.

2.3.3 Master Plan Update Phase 2 – Alternatives Evaluation

Phase 2 of the Master Plan Update serves as an Alternatives Evaluation that revisited the methodologies and results from the 2006 Master Plan, and concluded that unit costs for system improvements were significantly underestimated, but that the recommended repairs were likely more extensive than needed. The Phase 2 Master Plan Update presented options for further consideration and analysis, including collecting additional flow monitoring data, conducting infiltration and inflow (I/I) reduction pilot studies, performing benchmarking studies, and also included updated costs for the CIP.

3.0 WASTEWATER FLOWS

This section discusses wastewater flow components, the 2015 Flow Monitoring Study, and outfall flume flows related to wastewater flows within the CVSan collection system.

3.1 Wastewater Flow Components

PWWF is significantly greater than peak dry weather flow (PDWF) because of the presence of I/I. The various components of I/I are depicted in Figure 2. I/I is considered to have two major components: Rainfall-dependent I/I (RDII) and groundwater infiltration (GWI).

Figure 2. Wastewater Components for Typical PWWF Conditions

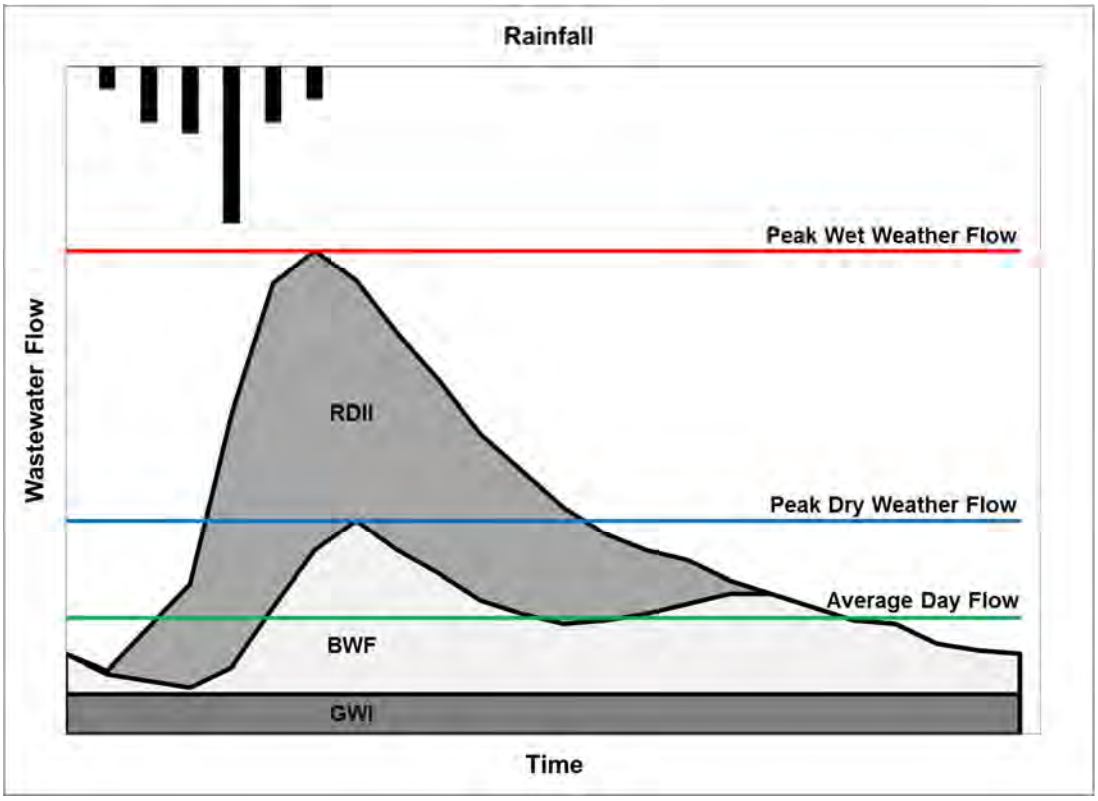

RDII consists of a combination of inflow and rainfall-dependent infiltration. Inflow is defined as storm water runoff directly entering a wastewater collection system though system leaks/openings (such as perforated manhole covers) and improper/illicit storm water connections (such as catch basins, roof leaders, cleanouts, foundation drains, drainage sump pumps, and area drains). Infiltration is defined as water traveling through the ground and entering the collection system through defective pipes, pipe joints, damaged lateral connections, and porous manhole walls. Non-rainfall-dependent GWI occurs when portions of a wastewater collection system are below the groundwater table for extended periods of time, even during dry weather periods. Rainfall-dependent infiltration occurs when groundwater levels briefly rise during storms to submerge portions of the wastewater collection system.

3.1.1 CVSan RDII Levels

CVSan is considered to have severe levels of inflow and infiltration (I/I) according to industry standards. Nationally, a typical PWWF-to-ADWF ratio above 3.5 is considered high. In the San Francisco Bay, collection systems with PWWF-to-ADWF ratios above 5 are common, and ratios above 8 or 9 are considered very high. It has been demonstrated in earlier Master Plans that CVSan has a PWWF-to-ADWF ratio of over 10 during design storm events (the 10-year, 24-hour storm). Moreover, these high ratios are short-term in nature, thus indicating a severe level of rainfall-dependent I/I. Therefore, the need exists to provide CVSan with a better understanding of the I/I occurring within the collection system in order to confirm the need for several of CVSan's currently-planned hydraulic capacity upgrade projects.

3.1.2 Sources of RDII

Typical sources of RDII into wastewater collection systems are shown in Figure 3. In addition to direct and illicit connections, aging and damaged sewer laterals are also commonly found in the San Francisco Bay Area to be a major contributor of RDII, since laterals are typically located on private property, poorly maintained, buried at shallow depths, and subject to tree root intrusions.

Figure 3. Typical Sources of RDII

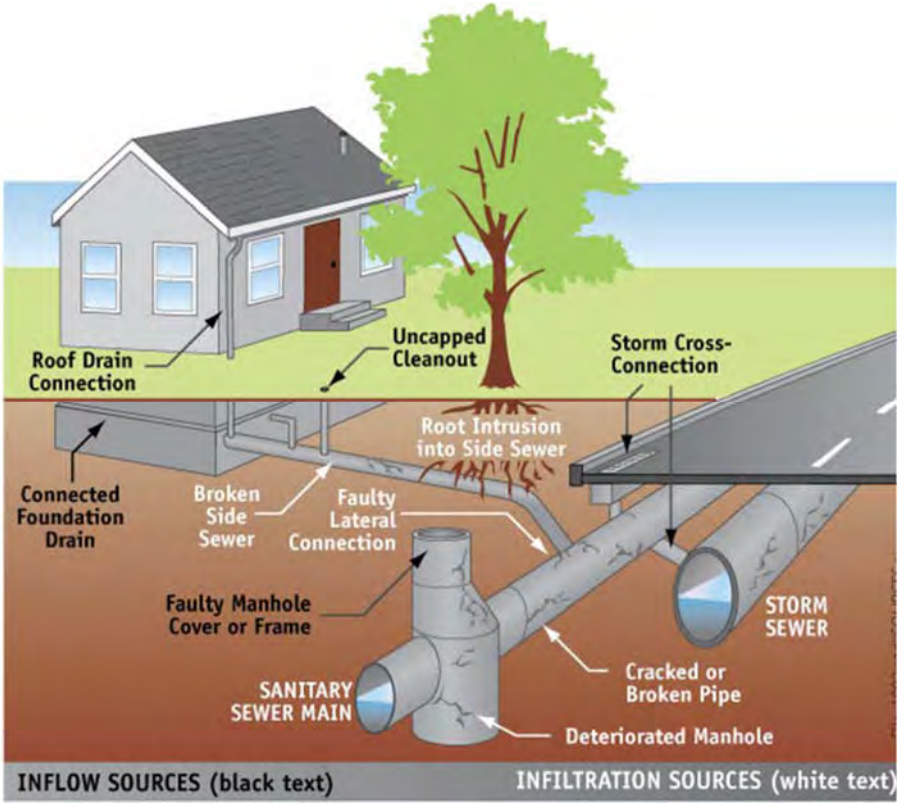

3.1.3 Inflow Indicators

The first indicator of inflow is the fast response of collection system flow rates, where storm water rapidly flows into the collection system and causes a sharp increase in flows directly after rainfall begins. However, a similar collection system response can also occur due to rainfall-dependent infiltration entering defective shallow laterals, which often act as French drains for yard and driveway areas.

Smoke testing is a commonly-used method for locating individual inflow sources, although it is also generally understood that this procedure does not identify all sources of inflow. Smoke testing involves charging the collection system with non-toxic smoke, which fills the airspace of mains, manholes, and laterals. Once the system is charged, inspectors look for the emergence of smoke from building roof vents (indicating a legal connection of a building sewer lateral) and from illicit/improper connections such as:

- Storm drain cross-connections
- Area drains
- Roof drain/downspouts
- Basement/foundation drains
- Uncapped or loosely-capped cleanouts

Smoke will not pass through P-traps, surcharged pipes, sump pumps connected from basement drains, or moisture-saturated soil. In dry summer months, smoke can sometimes be observed emerging from the dry ground surface on private property, indicating poor private service lateral condition. It is for this reason that the mid- to late dry season tends to be the best time to perform such testing, when soil moisture is likely to be at a minimum. Smoke testing is typically contracted based on linear footage of main sewer line. Costs vary from $1.00 to $1.50 per linear foot, and testing of 7,000 to 10,000 feet per day is typically achievable.[1]

3.1.4 Infiltration Indicators

Infiltration can occur into any portion of the collection system that is not hydrostatically sealed. Typically, pipe material and age provides an indication of sewers likely to be deteriorated or subject to poor construction methods/techniques that were common in earlier eras.

Condition assessment data can also be used to identify possible infiltration sources. CCTV inspections are a common means of assessing the condition of pipelines and the potential for infiltration. Although CCTV inspections do not typically identify active points of RDII (because inspections are generally not practical during major storm events), some CCTV inspection observations can indicate potential infiltration problems. These include:

- Observed points of infiltration
- Pipe cracks/holes; broken pipe
- Offset/separated joints
- Root intrusion
- Defective lateral tap connections

The proximity of deteriorated sewer mains to a concentrated source of storm water such as creeks, drainage facilities, or areas of frequent street flooding can also indicate a higher likelihood of greater infiltration rates.

The Focused Electrode Leak Locator (FELL) technology detects the leak potential of a pipe by measuring the electrical resistivity of the pipe wall. Like water, electricity follows a path of least resistance, so a sewer that allows water to penetrate or leak can also allow electrical current to escape. Each defect is rated either “small,” “medium,” or “large,” based on a sonde current

[1] Sterling, Raymond L., et. al., Water Environment Research Foundation (WERF), *Methods for Cost-Effective Rehabilitation of Private Lateral Sewers*, 2006.

"threshold" established from comparison studies between previous data and joint pressure tests. The results can prioritize sewers for follow-up inspections and I/I reduction projects.

3.2 2015 Flow Monitoring Study

The 2015 Flow Monitoring Study (noted above) provided an assessment of baseline flows, peak flows, and peak I/I conditions from the 2014/2015 wet season. Key elements of that study that are discussed in this section include: 1) flow metering sites, 2) rainfall results, and 3) flow metering results.

3.2.1 Flow Metering Sites

The geographic configuration of flow metering sites and rain gauges used in the study are depicted in Figure 4 and summarized in Table 2. Figure 4 also shows the six collection system tributary basins of interest. The five basins north of Interstate-580 are defined by the fact that they are the primary areas contributing to trunk lines that are suspected of being undersized. A total of ten flow meters at eight distinct locations (designated as Sites M-1 through M-8), and two rain gauge sites (designated as RG-A and RG-B), were used in the study. These sites were selected either to capture flows from the five tributary basins of interest (Sites M-1, M-2, M-6, M-7, and M-8), or to represent the entire service area (Sites M-3, M-4, and M-5). Monitoring was performed over a period of approximately four months from November 18, 2014 to March 29, 2015.

Table 2. 2014/2015 Flow Monitoring Locations

Site No.	Description	Manhole No.	Diameter	Location	Purpose
M-1	Redwood Road (upstream reach)	27-69	8"	Redwood Rd. and Joseph Dr.	Validate Upper Redwood Road Capacity Project
M-2	Redwood Road (downstream reach)	MH310	6"	Redwood Rd. north and Heyer Ave.	Validate Upper Redwood Road Capacity Project
M-3N	Upstream of flume	24-15	15"	3rd St. south of Crescent Ave.	Verify flume accuracy; capture trunk flow splits to validate South of I-580 Capacity Project
M-3E	Upstream of flume	24-15	8"	3rd St. south of Crescent Ave.	Verify flume accuracy; capture trunk flow splits to validate South of I-580 Capacity Project
M-3W	Upstream of flume	24-15	8"	3rd St. south of Crescent Ave.	Verify flume accuracy; capture trunk flow splits to validate South of I-580 Capacity Project
M-4	Upstream of flume	24-3	33"	3rd St. at Crescent Ave.	Verify flume accuracy; capture trunk flow splits to validate South of I-580 Capacity Project
M-5	Upstream of flume	24-2	24"	3rd St. at Crescent Ave.	Verify flume accuracy; capture trunk flow splits to validate South of I-580 Capacity Project
M-6	Forest Avenue	30-54	15"	Forest Ave. at Castro Valley Blvd.	Validate Forest Avenue Capacity Project
M-7	Sandy Road	28-94	8"	Sandy Rd. north of James Ave.	Validate Sandy Road Capacity Project
M-8	Marshall Street	30-40	10"	Marshall St., north of Greenacre Rd.	Validate Marshall Street Capacity Project

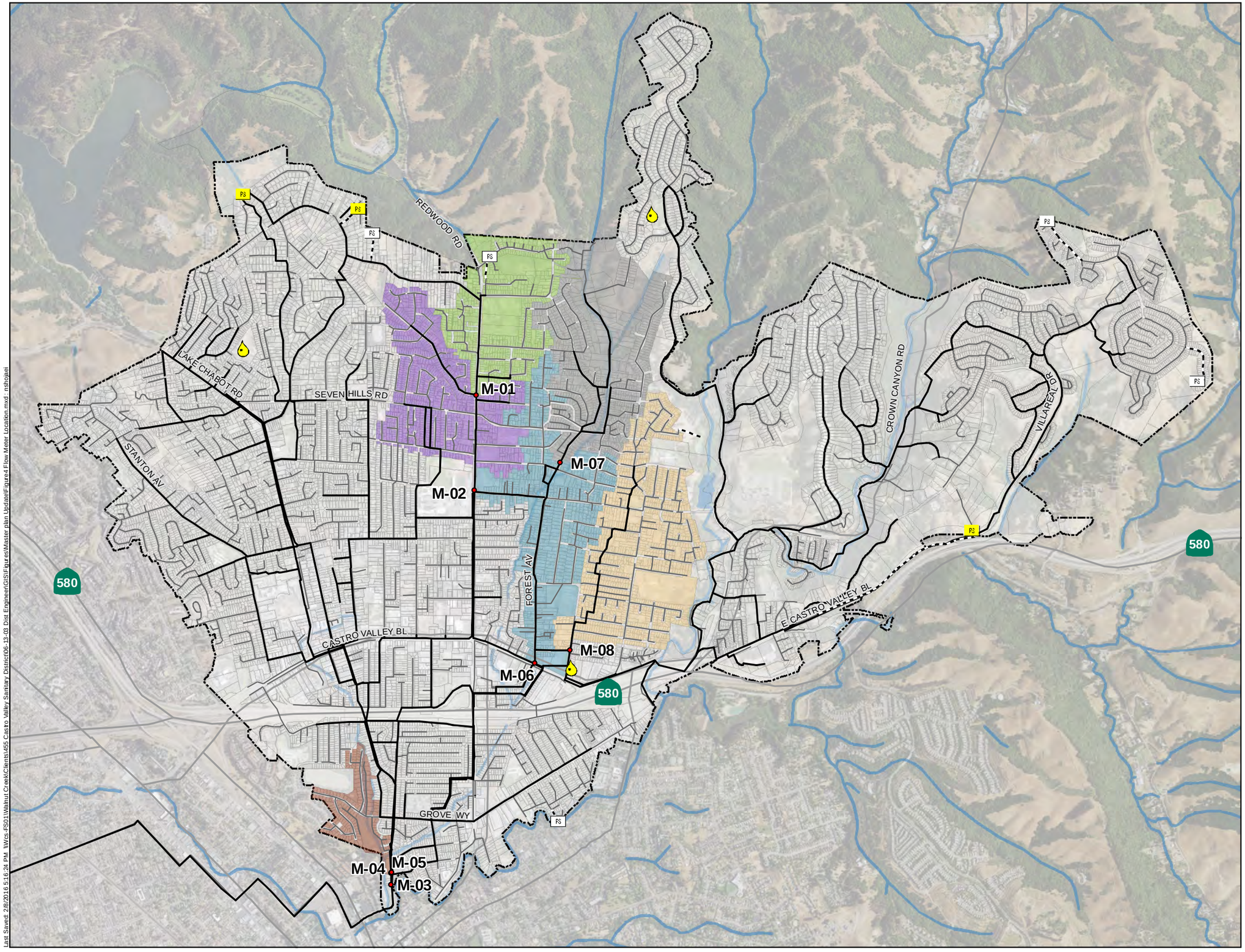

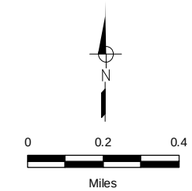

Symbology

- Rain Gauge
- Flow Monitoring Site

2014/15 Flow Monitoring Basin

- 1
- 2
- 3-W
- 6
- 7
- 8
- Modeled Gravity Main
- Unmodeled Gravity Main
- Modeled Pump Station
- Unmodeled Pump Station
- Force Main
- District Boundary

Notes:
1. Metering sites 3,4, and 5 collectively represent flows from the entire system.
2. Metering site 3 includes meters 3-W, 3-N, and 3-E.

CVSan

WEST YOST ASSOCIATES

Figure 4

2014/15 Flow Meter Locations

Castro Valley Sanitary District
WWCS Master Plan Update

Last Saved: 2/8/2016 5:16:24 PM \\Wys-FS01\Walnut Creek\Clients\455 Castro Valley Sanitary District\06-13-03 Dist Engineer\GIS\Figures\Master plan Update\Figure4 Flow Meter Location.mxd - nshojaei

The Site M-3 metering location has a 15-inch inlet from the north, an 8-inch inlet from the east, an 8-inch inlet from the west, and a 15-inch outlet to the south. In 2013/2014, flow was measured on the outlet pipe, but due to flow turbulence associated with three lines coming together, hydraulic conditions were not ideal. For the 2014/15 season, all three inlet lines were monitored separately to capture the total flow. These lines are designated at Site M-3N, Site M-3E, and Site M-3W.

3.2.2 Rainfall Results

The five largest storm periods captured in the 2015 Flow Monitoring Study span the following dates:

- November 19–22, 2014
- November 29–December 7, 2014
- December 11, 2014
- December 15–21, 2014
- February 6–9, 2015

Table 3 summarizes the rainfall totals at each rain gauge and peak rainfall intensity at rain gauge B for each of these storm periods. As indicated in the table, the December 11, 2014 storm was the most significant in terms of rainfall volume and rainfall intensity.

Table 3. Storm Period Rainfall Totals

Storm Period	RG-A Rainfall, in	RG-B Rainfall, in	RG-B Peak Rainfall Intensity (in/hr)
November 19–22, 2014	1.65	2.13	0.34
November 29–December 7, 2014	3.48	4.07	0.37
December 11, 2014	4.09	4.49	1.03
December 15–21, 2014	3.03	3.19	0.34
February 6–9, 2015	2.38	2.88	0.41

Based on existing long-term rainfall records, it is possible to put these storm periods into a historical context using historical rainfall information provided by the National Oceanic and Atmospheric Administration (NOAA) to derive long-term storm frequency and magnitude characteristics. These historical storm characteristics are defined in terms of return period and storm duration. For example, a 24-hour storm with a 10-year return period represents the peak 24-hour rainfall total for a given event that is expected to happen once every ten years, on average.

The monitored storm periods from the 2014/15 monitoring season are compared to historical storm characteristics for the Castro Valley area in Figure 5. As indicated in the figure, the February 3–6, 2015 storm period was not a historically significant event. However, rainfall during the December 11, 2014 storm (shown in the figure as covering the period from November 30 to December 19, 2014) had a return frequency of between 10 and 25 years for rainfall durations of 6-hours to 24 hours.

Figure 5. Storm Event Classification at RG-A and RG-B

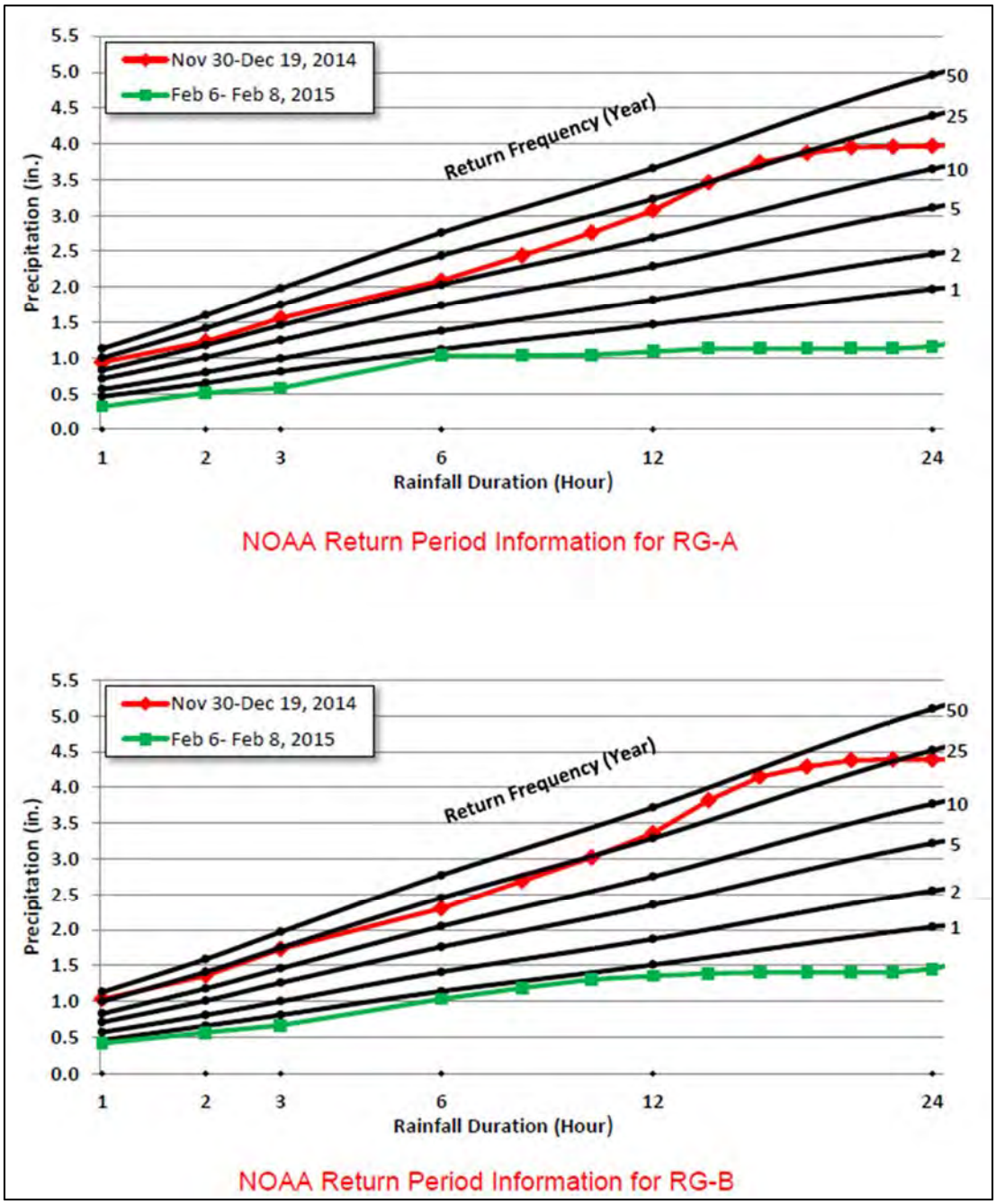

Source: Castro Valley Sanitary District Sewer Flow Monitoring and Inflow/Infiltration Study, V&A, June 2015 (2015 Flow Monitoring Study).

3.2.3 Flow Metering Results

The flow metering results for the monitoring period are summarized in Table 4. As indicated in the table, all of the sites had peaking factors greater than 4.0, and most had peaking factors greater than 10.0. As noted above, these results are considered high according to industry standards and comparative San Francisco Bay Area agencies.

Table 4. Capacity Analysis Summary

Site	Pipe Diameter, in	ADWF, mgd	Peak Measured Flow, mgd	Peaking Factor	Peak Measured Depth, in	Surcharge Above Pipe Crown, ft
M-1	8	0.082	1.747	21.2	110.9	8.6
M-2	8	0.170	1.385	8.1	6.8	–
M-3N	15	0.306	1.823	6.0	9.2	–
M-3E	8	0.042	0.173	4.1	13.0	0.4
M-3W	8	0.009	0.471	50.9	10.0	0.2
M-4	33	1.471	18.784	12.8	25.0	–
M-5	24	0.825	9.331	11.3	21.7	–
M-6	15	0.206	2.85	13.8	8.7	–
M-7	8	0.128	1.811	14.1	9.6	0.1
M-8	10	0.157	1.669	10.6	8.5	–

3.3 Flume Flows

Flow data collected on 15-minute intervals at the existing CVSan outfall flume were available for the period of November 2014 through early January 2015. Flow metering sites M-3N, M-3E, M-3W, M-4, and M-5, when taken in aggregate, should approximate the flow measured at the flume (within the level of error of each flow meter). A comparison of the 15-minute data for the period of overlap of the two data sets (flume versus 5-site aggregate) is shown in Figure 6. Average daily flows for the period of comparison are shown in Figure 7. Some key conclusions of these comparisons include the following:

1. The two data sets generally track very closely for most of the period of comparison.
2. Beginning around December 19th, the flume drops suddenly and stays well below the 5-site aggregate for several days until slowly tracking back upward and reconverging around January 1st. Based on the prior data, it appears that the 5-site aggregate is more reliable during this period.
3. The flume tends to report slightly lower than the 5-site aggregate at low-flow conditions, and higher than the 5-site aggregate at high-flow conditions.

4.0 HYDRAULIC MODEL UPDATES

An H2OMapSewer model of the CVSan collection system was originally developed and used as part of the 2006 Master Plan. Since that time, collection system improvements have been constructed, the GIS data describing the system configuration has been updated, and additional collection system flow data have become available. Accordingly, this section summarizes the model network updates and dry and wet weather model calibrations.

Due to the built-out nature of the CVSan tributary area, land uses have remained largely unchanged since the 2006 Master Plan. As a result, no significant land use updates were needed.

\\Wcs-FS01\Walnut Creek\Clients\455 Castro Valley Sanitary District\06-13-03 Dist Engineer\ENGR\01 Model Update\Figures 6 and 7 - Flume flow comparison.xlsx

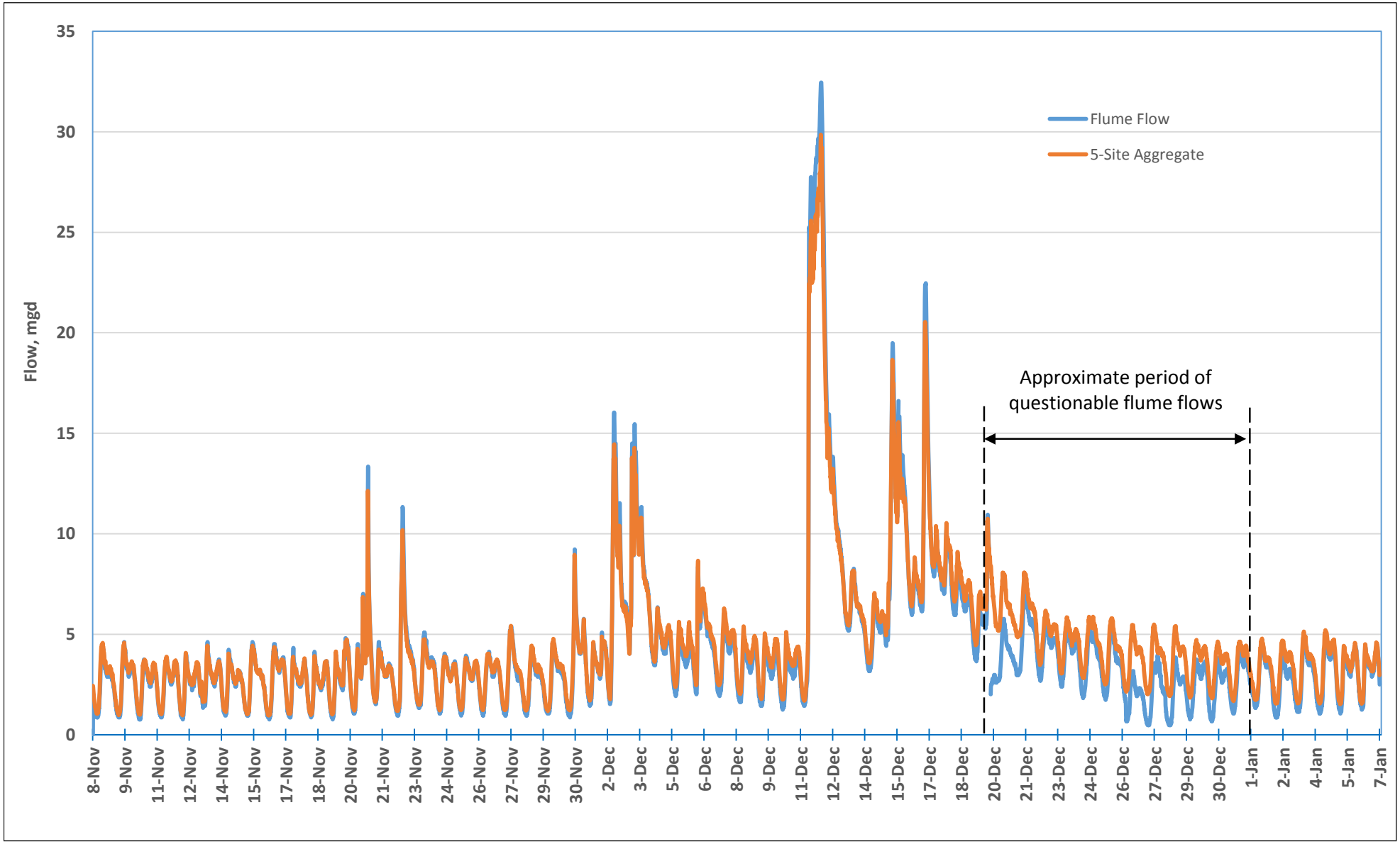

Figure 6

CVSan Flume versus 5-Site Aggregate Flows, 15-Minute Data

Castro Valley Sanitary District
Wastewater Collection System Master Plan Update

\\Wcs-FS01\Walnut Creek\Clients\455 Castro Valley Sanitary District\06-13-03 Dist Engineer\ENGR\01 Model Update\Figures 6 and 7 - Flume flow comparison.xlsx

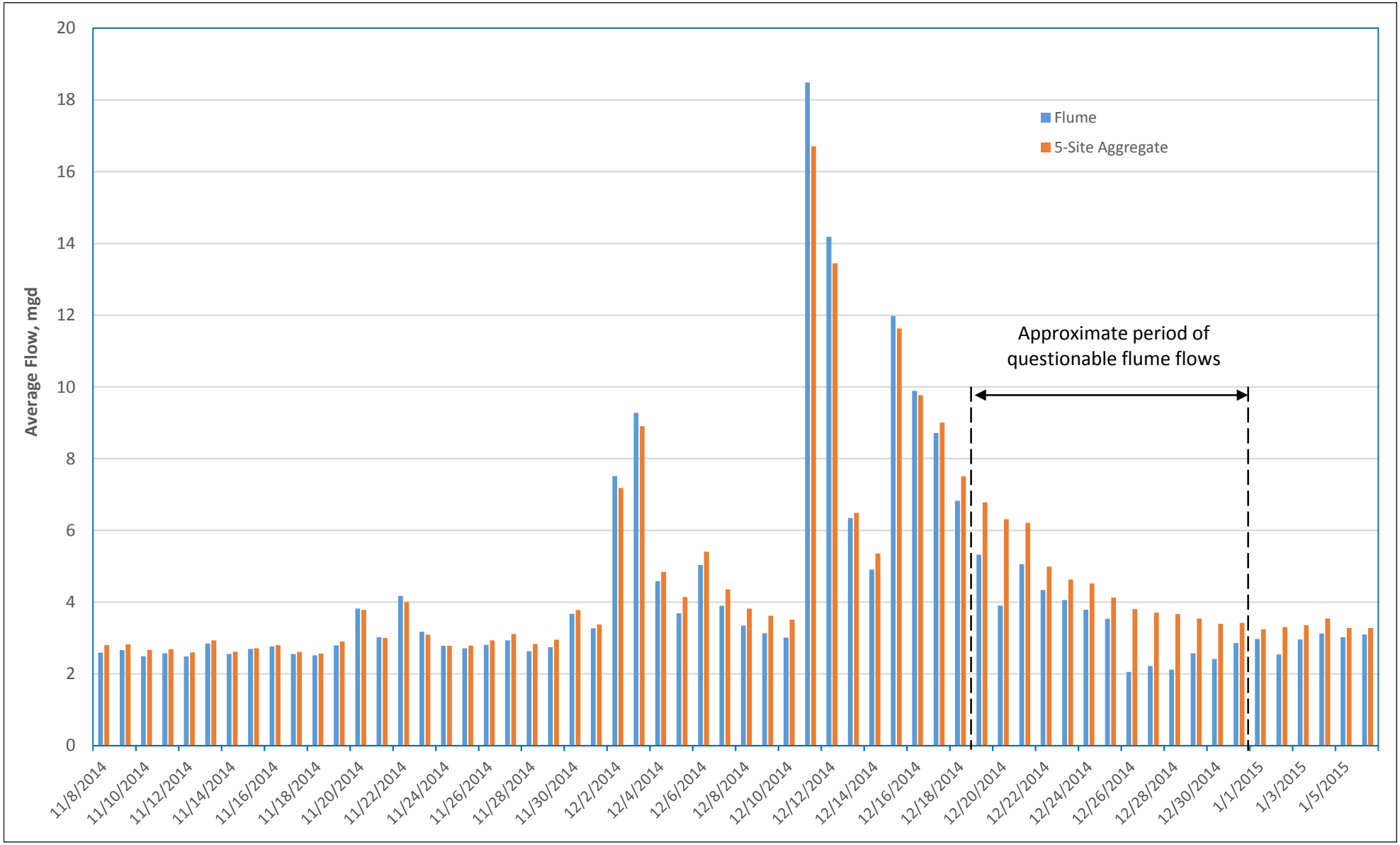

Figure 7

Daily Average Flows:
Flume versus 5-Site Aggregate

Castro Valley Sanitary District
Wastewater Collection System Master Plan Update

In addition, the same pump stations that were modeled in the 2006 Master Plan are included in the current model. Specifically, the modeled stations include Pump Stations 3 and 5 located near the northern boundary of the system between Redwood Road and Lake Chabot Road, and Pump Station 7 on Villareal Drive, serving the northeastern corner of the system.

4.1 Model Network Updates

Pipe reaches that have been modified from the 2006 Master Plan model are also indicated in Figure 8, which shows the following distinctions between model elements:

1. Modeled facilities that remain unchanged from the 2006 Master Plan.
2. Revised model elements based on structural improvements that have occurred since the time of the 2006 Master Plan.
3. Revised model elements based on updated system information where no actual physical changes to the system have occurred.

4.1.1 System Improvements

System improvements that have been completed since the 2006 Master Plan are indicated in Figure 8 and include the following:

- The Lake Chabot Road improvements in the northwest area of the collection system.
- The Streetscape project that extends primarily along Redwood Road and Castro Valley Boulevard in the central area of the collection system.

4.1.2 Asset Registry Updates

Asset registry updates refer to system information updates based on ArcGIS and Lucity data that have been updated since the time of the 2006 Master Plan. Several model segments were revised based on updated GIS information and are indicated in green in Figure 8.

4.1.3 Flow Splits

CVSan staff have provided detailed information on portions of the system where ambiguity previously existed regarding collection system hydraulics and sewer configuration. Documentation of system connectivity as obtained from discussions with and field verifications made by CVSan staff is presented in Appendix A.

4.2 Dry Weather Model Calibration

Dry weather calibration results for each metering site are summarized in Table 5. Detailed comparisons of measured and modeled diurnal dry weather flow conditions at each flow monitoring site are presented in Appendix B. The comparison of system-wide measured versus modeled diurnal dry weather flow is presented in Figure 9. As indicated in Table 5, for the system as a whole, the modeled ADWF is within 3.5 percent of the metered ADWF, while the modeled PDWF is within 7.1 percent of the metered PDWF.

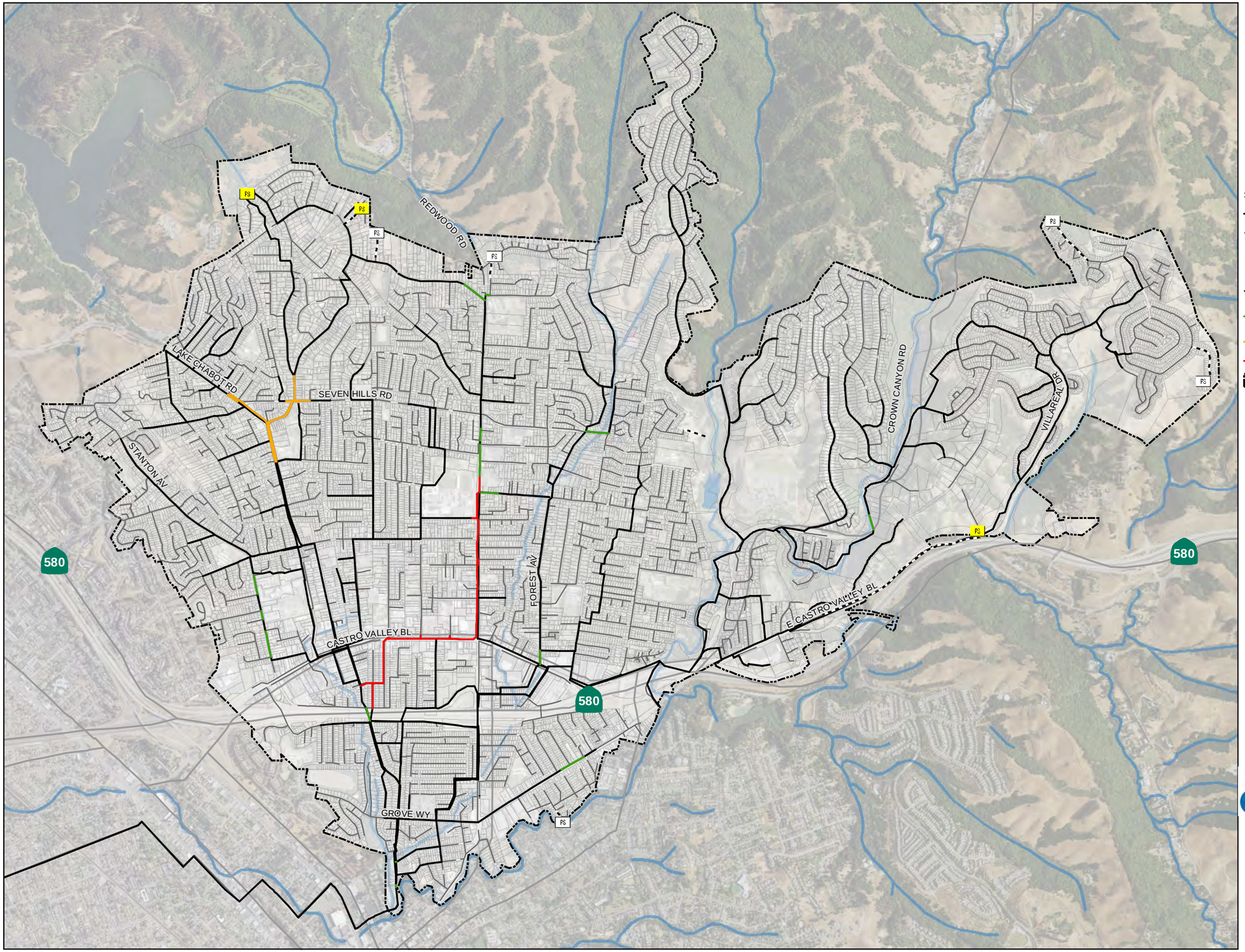

N

0 0.2 0.4

Miles

Symbology

- Modeled Gravity Main
- Unmodeled Gravity Main
- Modeled Pump Station
- Unmodeled Pump Station
- Force Main
- Diameter Change Based on 2015 GIS
- Lake Chabot Road Improvement
- Streetscape Project
- District Boundary

CVSan

WEST YOST ASSOCIATES

Figure 8

Model Network Updates

Castro Valley Sanitary District
WWCS Master Plan Update

Last Saved: 1/5/2016 3:08:57 PM \\Wys-FS01\Walnut Creek\Clients\455 Castro Valley Sanitary District\06-13-03 Dist Engineer\GIS\Figures\Master plan Update\Figure8 Model Network Update.mxd : nshojaei

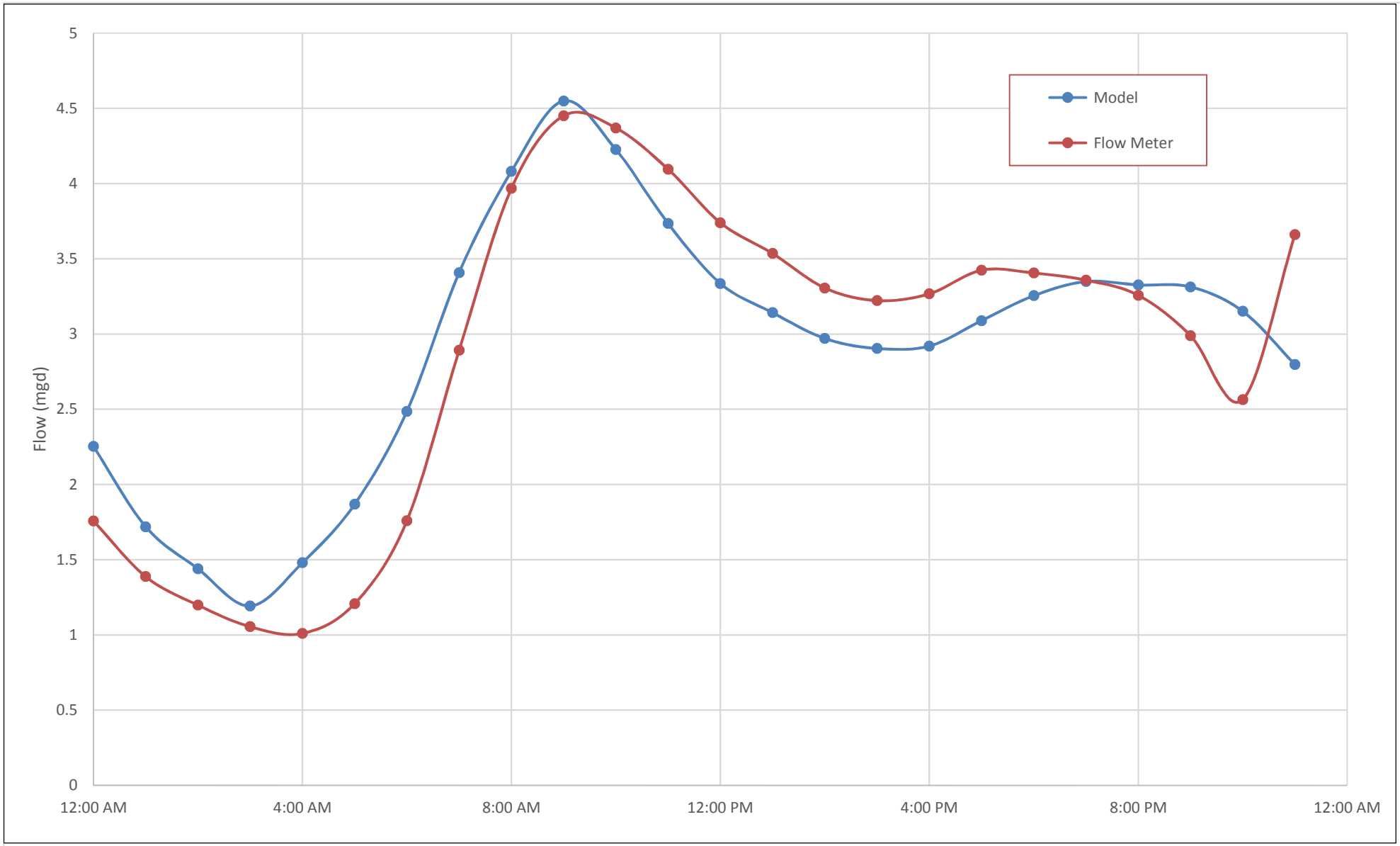

Figure 9

ADWF Comparison:
Metered versus Modeled Flow

Castro Valley Sanitary District
Wastewater Collection System Master Plan Update

Table 5. Dry Weather Calibration Results

Meter	Meter Peak Dry Weather Flow, mgd	Model Peak Dry Weather Flow, mgd	Percent Difference	Meter Average Dry Weather Flow, mgd	Model Average Dry Weather Flow, mgd	Percent Difference
1	0.096	0.095	-1.0%	0.15	0.15	0.5%
2	0.18	0.18	-0.2%	0.29	0.29	1.5%
3-N[(a)]	0.31	0.32	2.3%	0.47	0.43	-7.1%
4	1.58	1.59	0.5%	2.52	2.58	2.5%
5	0.92	0.91	-0.2%	1.43	1.41	-1.2%
6	0.22	0.23	3.5%	0.34	0.35	3.0%
7	0.13	0.14	2.2%	0.19	0.20	0.7%
8	0.17	0.17	0.3%	0.30	0.29	-2.3%
System-wide	2.87	2.92	1.6%	4.45	4.55	2.2%

(a) The tributary areas to meters 3-E and 3-W were not specifically modeled, but instead the flow information from those meters were used in the calculation of system-wide flows.

Flow meters used to collect flow data typically have a margin of error of approximately two percent in velocity readings and ± 0.1" in depth readings, which combines to approximately ± 5 percent. Hydraulic models are considered to be calibrated well if flow projections are within ten percent of metered flows.

The ADWF calibration involves adjustment of the land use flow factors that were established in the 2006 Master Plan. Due to limited data, not all of the factors could be calibrated; however, many of the land use categories are relatively trivial in terms of flow generation. Therefore, for this analysis, ADWF calibration was limited to residential categories only. Moreover, the calibration involved a single adjustment factor applied to all of the residential categories. This assumption is considered reasonable given that the typical flow-generating behavior is not expected to vary widely from one residential land use category to the next.

The calibrated dry weather land use flow factors are compared to the factors from the 2006 Master Plan in Table 6. The results of the land use flow factor calibration are that all residential land use factors were reduced by 11.5 percent, and then appropriately rounded off.

Table 6. Land Use Flow Factors

Land Use Designation	Unit	Flow Factor	
		2006 Master Plan	Current Analysis
Single-Family Residential	gpd per parcel	170	150
Duplex to Quadplex	gpd per parcel	250	220
Multi-Family 1 (10 – 19.9 dwelling units per acre)	gpd per acre	2100	1900
Multi-Family 2 (29 dwelling units per acre)	gpd per acre	3800	3400
Multi-Family 3 (60 dwelling units per acre)	gpd per acre	7800	6900
Commercial	gpd per acre	1250	1250
Industrial	gpd per acre	500	500
Institutional	gpd per acre	350	350
Mixed Use	gpd per acre	3350	3350
Open Space/Vacant	gpd per acre	0	0

It should be noted that the baseline dry weather flows that were measured in 2014, and which serve as the basis for the dry weather flow calibration, reflect lower than normal wastewater flow generation rates due to the ongoing drought. As a result, the use of the newly-calibrated factors shown in Table 6 will be less conservative than the use of the previous factors, which may reflect more typical non-drought period wastewater flow generation rates. Therefore, the capacity analysis (discussed in Section 5.0) is performed using two separate simulations: one based on the newly-calibrated land use flow factors, and one based on the factors from the 2006 Master Plan.

4.3 Wet Weather Model Calibration

The wet weather calibration of the model involves the application of an R-T-K analysis to quantify the following three factors at each flow metering location in which peak wet weather flows were measured:

R-factor: The percentage of rainfall that enters the system in the form of I/I.

T-factor: The time from the storm onset to the runoff peak.

K-factor: A constant used in defining the shape of the hydrograph.

Of these, the R-factor has the clearest intuitive meaning, and also has the largest influence on the magnitude of the peak wet weather flow of any of the R-T-K factors. The resultant R-factors used in this study are shown on Figure 10. Because the number of flow monitors in the 2015 Flow Monitoring Study was significantly reduced from those deployed for the 2006 Master Plan, the R-T-K factors for areas not directly monitored in 2014/2015 were retained from the 2006 Master Plan.

The December 11, 2014 storm served as the basis for the PWWF calibration. Comparisons of measured and modeled diurnal peak wet weather flow conditions are presented in Appendix C. The comparison of system-wide measured versus modeled diurnal peak wet weather flow is presented in Figure 11.

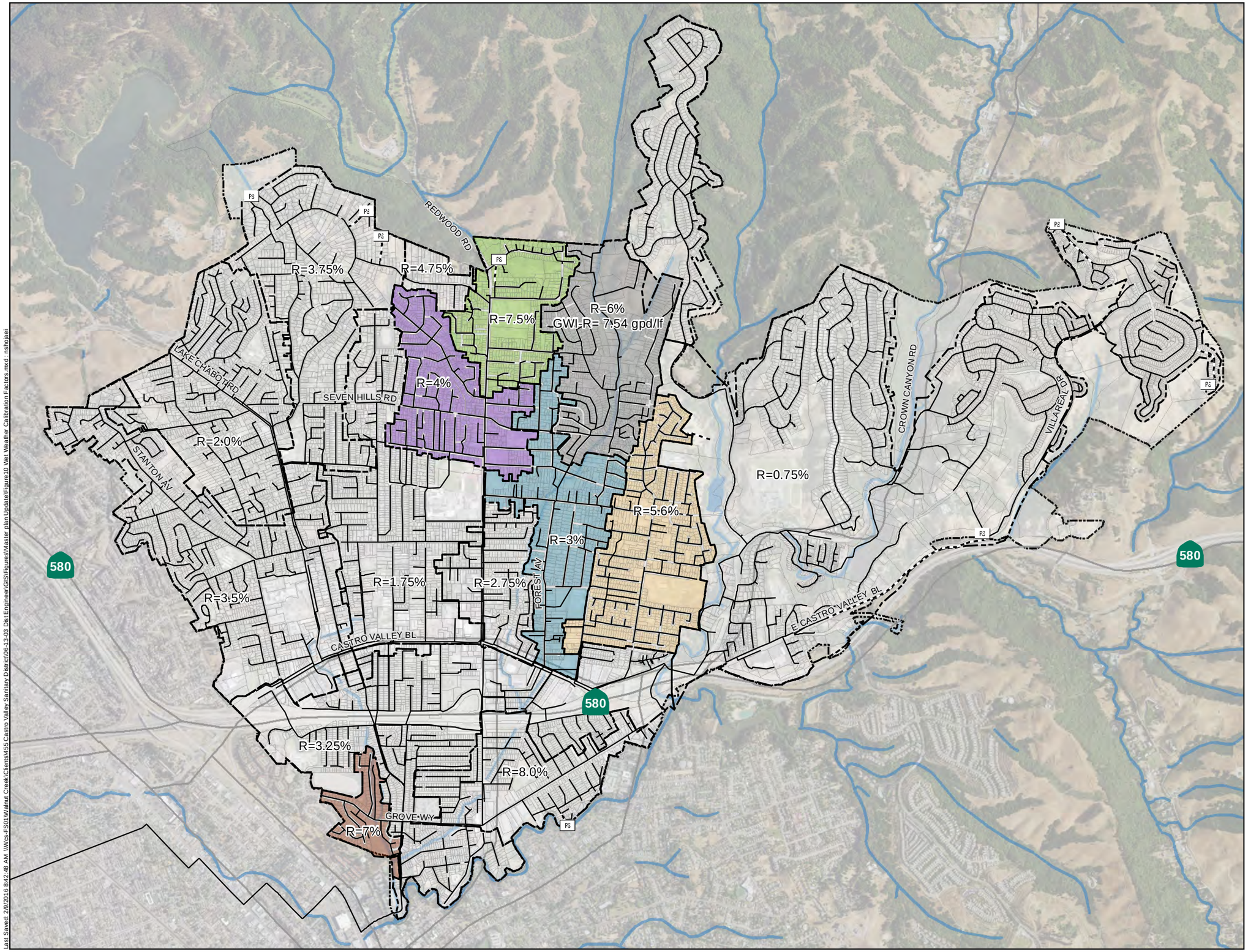

N

0 0.2 0.4

Miles

Symbology

- Gravity Main
- Pump Station
- Force Main
- District Boundary
- Area with Unique R-Value

2014/15 Flow Monitoring Basin

- 1
- 2
- 3-W
- 6
- 7
- 8

Notes:
1. R: The Total Effective Rainfall Volume (%)
2. GWI-R: Ground Water Infiltration Rate (gpd/lft)
3. R-values taken from 2006 SSMP, except for areas with colored hatching.

Figure 10

Calibrated R-Factors for PWWF Conditions

Castro Valley Sanitary District
WWCS Master Plan Update

Last Saved: 2/9/2016 8:42:48 AM \\Wcs-FS01\Walnut Creek\Clients\455 Castro Valley Sanitary District\06-13-03 Dist Engineer\GIS\Figures\Master plan Update\Figure10 Wet Weather Calibration Factors.mxd - rshojaei

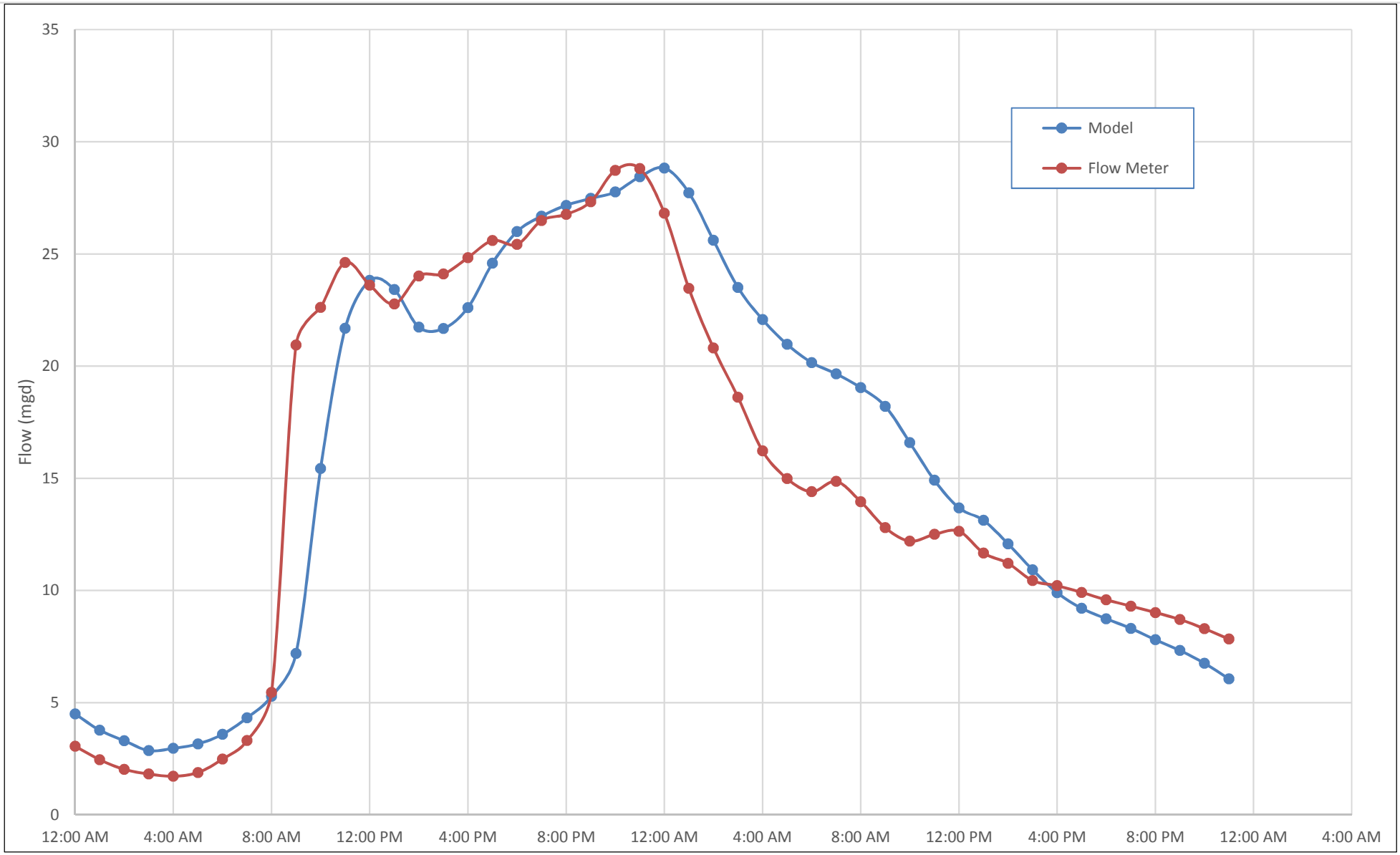

Figure 11

PWWF Comparison:
Metered versus Modeled Flow

Castro Valley Sanitary District
Wastewater Collection System Master Plan Update

At the outfall flume structure, the ADF is 4.6 (mgd), the PWWF peaking factor is 5.28, and the PWWF is 24.0 (mgd) during a 10 year, 24 hour design storm event.

5.0 CAPACITY ANALYSIS

The CVSan collection system capacity analysis involves the following elements:

- Design Storm
- Dry Weather Performance
- Wet Weather Performance

5.1 Design Storm

The design storm used in this analysis is the 10-year, 24-hour storm shown in Figure 12, which is consistent with the design storm used in the 2006 Master Plan.

Figure 12. Design Storm Distribution

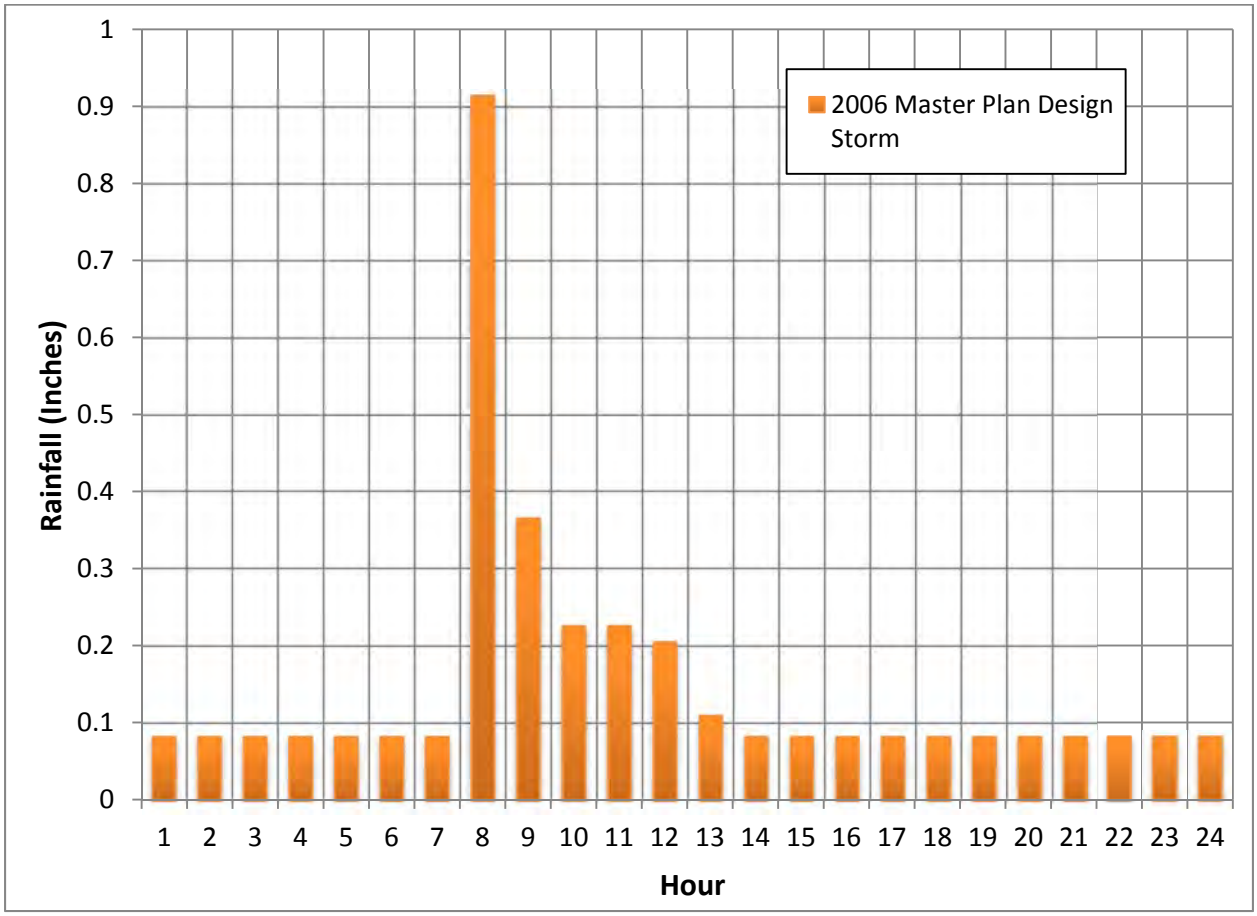

5.2 Dry Weather Performance

The assessment of dry weather performance involves the determination of which gravity lines surcharge or approach a surcharging condition during dry weather flow conditions. Accordingly, each gravity sewer was evaluated to determine which of the following categories it falls into for modeled PDWF conditions. The categories are defined in terms of the depth of flow (d) at PDWF conditions divided by the pipe diameter (D) and are displayed on Figure 13:

- d/D: 0 to 0.25
- d/D: 0.25 to 0.50
- d/D: 0.50 to 0.75
- d/D: 0.75 to 1.0
- d/D: >1.0

As indicated in Figure 13, there are two places in the system where d/D exceeds 0.75, both of which exceed 1.0 (full pipe capacity). The first of these is located on Aspen Avenue in a sewer that is undersized to handle design PWWF conditions (discussed in Section 5.3). The other is located along Strobridge Avenue in a segment where the GIS data indicates a substandard pipe slope. However, the flows are not especially high and the pipe is relatively deep, so this surcharging has a low impact. The pipe slope along the segment in question should be confirmed. There is some possibility that this sewer could pose maintenance issues associated with stagnant flow in the line, but overall, line capacity does not appear to be a concern.

5.3 Wet Weather Performance

The assessment of peak wet weather performance involves the determination of which gravity lines surcharge or outflow during design peak wet weather flow conditions. Accordingly, each gravity sewer was evaluated to determine which of the following categories it falls into for modeled PWWF conditions, which were chosen for this analysis because they are consistent with the categories used in the 2006 Master Plan:

- No Surcharging
- Surcharging 0 to 2 feet above pipe crown
- Surcharging >2 feet above pipe crown
- Manhole outflows

In general, the latter two categories are considered severe enough to trigger system improvements to correct the identified capacity issues. Areas where there is surcharging in the 0 to 2-foot range are considered to be watch-list areas that justify periodic monitoring.

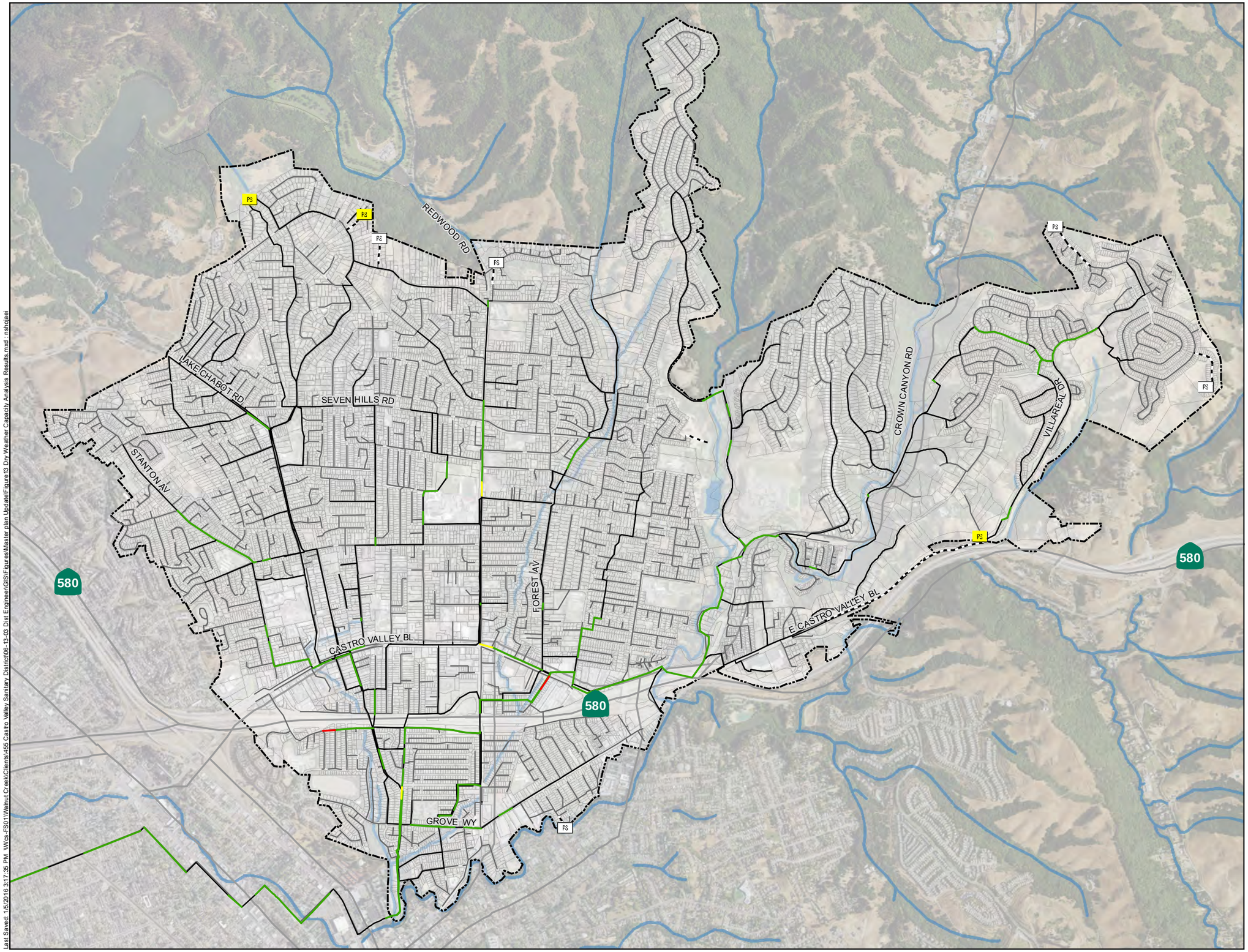

Symbology

d/D at Modeled PDWF Conditions

- ≥1
- 0.75-1
- 0.5-0.75
- 0.25-0.5
- 0-0.25
- Unmodeled Gravity Main
- Modeled Pump Station
- Unmodeled Pump Station
- Force Main
- District Boundary

Figure 13

Dry Weather Capacity Analysis Results

Castro Valley Sanitary District
WWCS Master Plan Update

Last Saved: 1/5/2016 3:17:35 PM \\Wcs-FS01\Walnut Creek\Clients\455 Castro Valley Sanitary District\06-13-03 Dist Engineer\GIS\Figures\Master plan Update\Figure 13 Dry Weather Capacity Analysis Results.mxd : nshojaei

The results of the analysis are indicated in Figure 14. Key areas of concern include:

- The existing 6- and 8-inch diameter Redwood Hills Road sewer extending south from Seven Hills Road
- The existing 8-inch diameter Sandy Road sewer extending south from Seven Hills Road
- The existing 10-inch diameter sewer along Marshall Street, extending from Normandy Court to Greenacre Road
- The existing 10, 12, and 15-inch diameter sewer along Aspen Avenue and Pine Street extending south and west from Castro Valley Boulevard
- Various locations south of Interstate-580 near the outlet of the CVSan collection system

Various locations along and tributary to the Stanton Avenue and Lake Chabot Road trunk lines in the western portion of the collection system are considered watch-list areas for which future monitoring is recommended (see below).

6.0 UPDATED CAPITAL IMPROVEMENT RECOMMENDATIONS

Based on the results presented above, a capital improvement program has been developed to address system deficiencies. Key topics covered in this section include:

- Recommended Capital Improvement Program
- Other Recommendations

6.1 Recommended Capital Improvement Program

The recommended CIP consists of the sewer capacity improvement projects summarized in Table 7 and shown on Figure 15. The total capital cost of the improvements is estimated to be $7.6 million. Detailed project sheets for each recommended improvement are provided in Appendix D. The major recommended CIP projects address the areas of concern shown in Figure 14, and are summarized below. Hydraulic profiles of each CIP project (showing the existing hydraulic deficiencies and the post-improvement hydraulic profile) are located in Appendix E.

Redwood Road Trunk Sewer. From Seven Hills Road to Heyer Avenue. This project is significantly shorter than estimated by the 2006 Master Plan because of the additional data provided by the 2015 Flow Monitoring Study for M-1 and M-2. In 2014/15, these two meters were placed directly downstream of the confluence of a smaller tributary basin and downstream of the planned hydraulic project to refine the project scope.

Sandy Road Trunk Sewer. From Seven Hills Road to north of James Avenue. This study uses improved flow monitoring data directly upstream of this project to refine the size a scope of the 2006 Master Plan.

Marshall Street Trunk Sewer. From Normandy Court to Greenacre Road. This basin calibrated remarkably well, and the use of the December 11, 2014 storm, which was very close to the 10-year, 24-hour design storm allowed the R-factors and PWWFs to be refined.

Table 7. Recommended Capacity Improvement Projects

Project Name	Risk Level	Location	Description	Flow Conditions	Fiscal Year	Cost, 2015 Dollars
Redwood Road Trunk Sewer	High	Redwood Road between Seven Hills Road and Heyer Avenue	• Upsize 1,058-LF sewer to 10-inch diameter VCP • Upsize 675-LF sewer to 12-inch diameter VCP	Existing Capacity: 0.93 mgd Design PWWF: 1.73 mgd	2016/17	855,000
Marshall Street Trunk Sewer	High	Marshall Street between Greenacre Road and Veronica Avenue and Normandy Court	• Upsize 1,328-LF sewer to 12 inch diameter VCP	Existing Capacity: 1.05 mgd Design PWWF: 1.67 mgd	2017/18	727,000
Sandy Road Trunk Sewer	Medium	Sandy Road south of Seven Hills Road	• Upsize 848-LF sewer to 10-inch diameter VCP	Existing Capacity: 0.88 mgd Design PWWF: 1.50 mgd	2017/18	259,000
Aspen and Pine Trunk Sewer	Medium	Aspen Avenue and Pine Street between Castro Valley Boulevard and Elm Street	• Upsize 809-LF sewer to 18-inch diameter VCP • Upsize 626-LF sewer to 21-inch diameter VCP	Existing Capacity: 1.17 mgd Design PWWF: 2.51 mgd	2017/18	1,264,000
South of I-580 Relief Sewer	High	South of Interstate-580 from Redwood Road to North 3rd Street	• Construct 3,874-LF of 21-inch diameter VCP • Construct 1,110-LF of 24-inch diameter VCP	Inadequate capacity on multiple alignments Design PWWF: 4.17 mgd	2018/19	4,457,000
					Total	**$7,562,000**

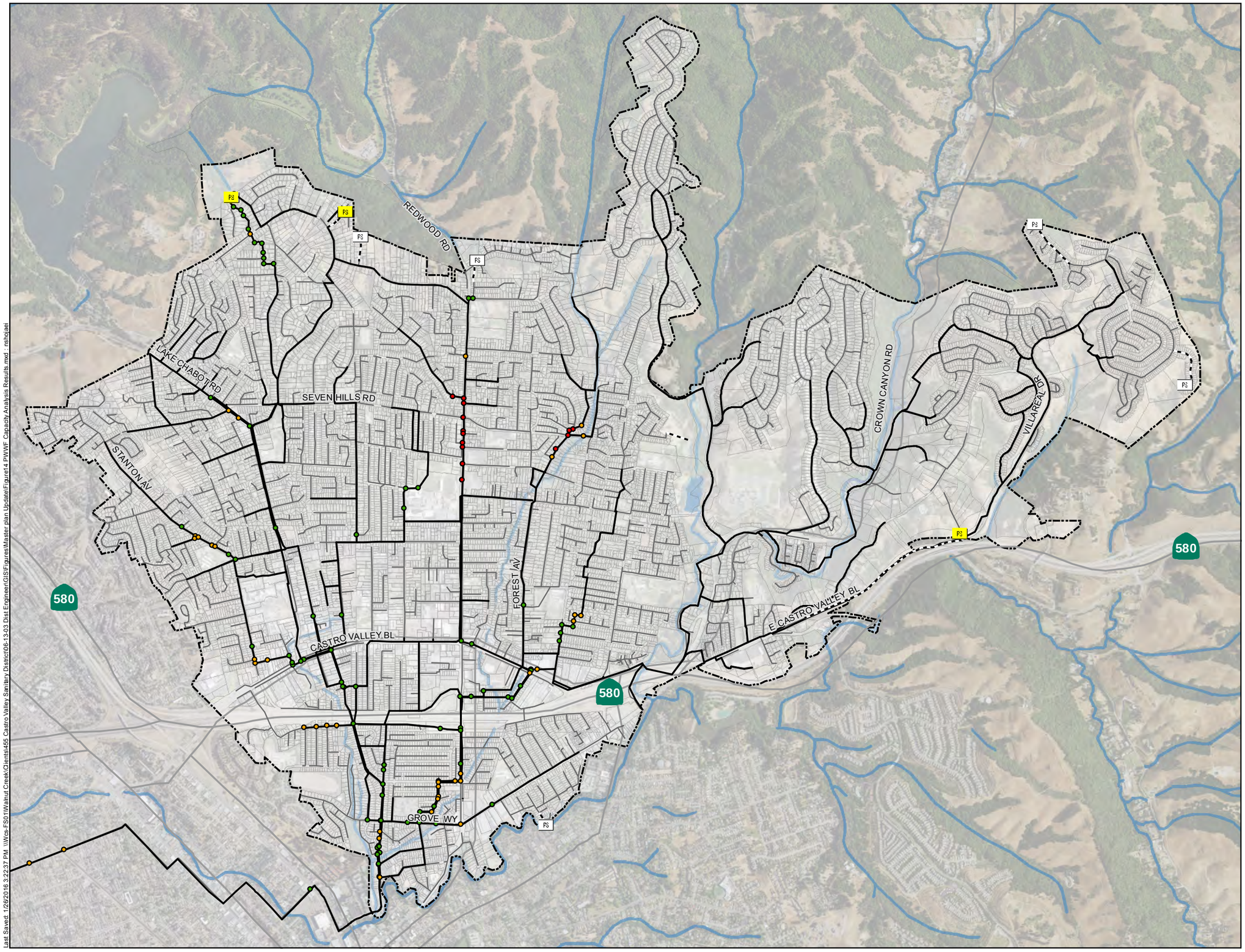

N

0 0.2 0.4
Miles

Symbology

Surcharge Condition

- No Surcharge (not shown)
- >0' and ≤2'
- >2 (no outflows)
- Outflows
- Modeled Gravity Main
- Unmodeled Gravity Main
- Modeled Pump Station
- Unmodeled Pump Station
- Force Main
- District Boundary

CVSan

WEST YOST ASSOCIATES

Figure 14

PWWF Capacity Analysis Results

Castro Valley Sanitary District
WWCS Master Plan Update

Last Saved: 1/28/2016 3:22:37 PM \\Wcs-FS01\Walnut Creek\Clients\455 Castro Valley Sanitary District\06-13-03 Dist Engineer\GIS\Figures\Master plan Update\Figure14 PWWF Capacity Analysis Results.mxd - nehojati

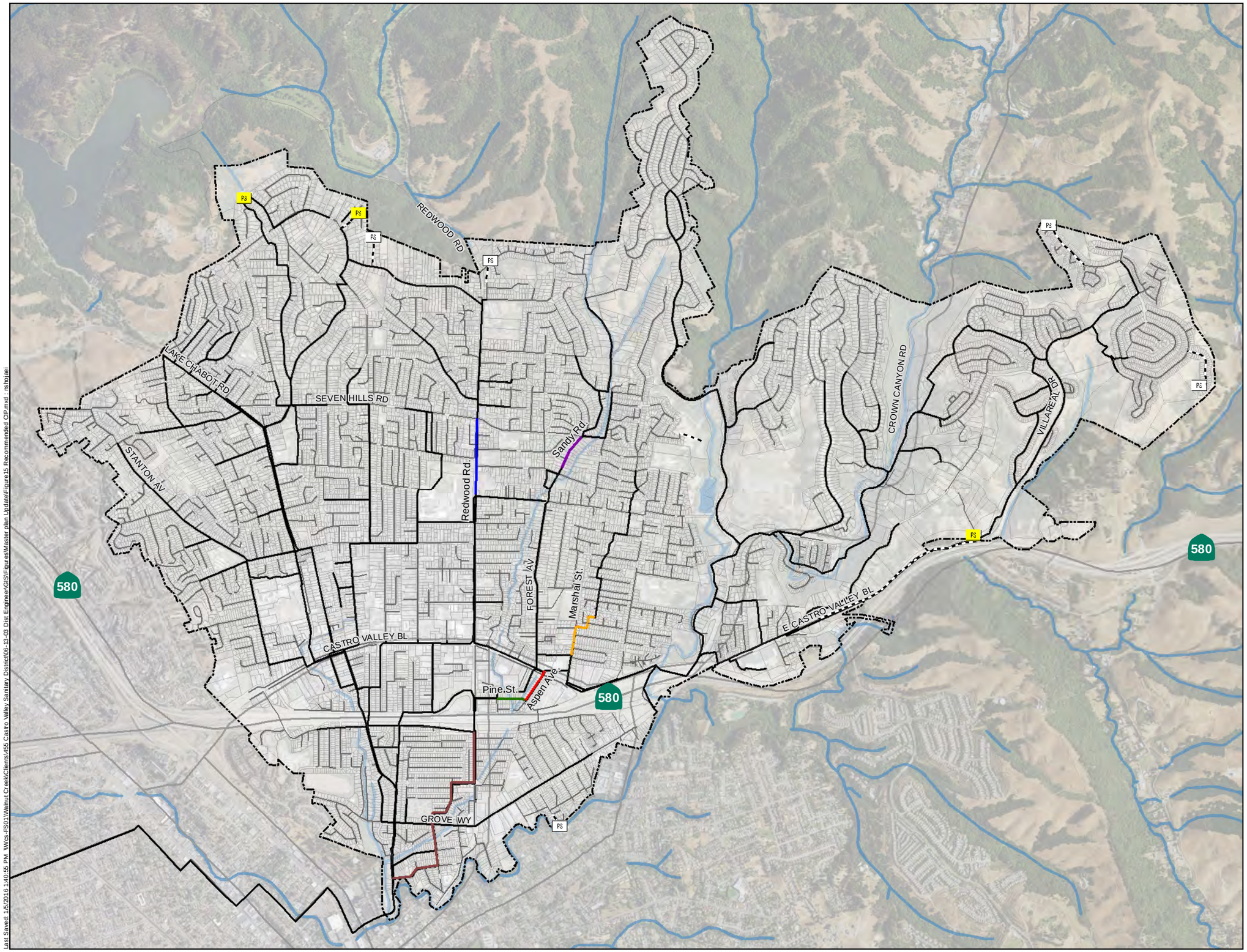

N

0 0.2 0.4

Miles

Symbology

- Modeled Gravity Main
- Unmodeled Gravity Main
- Force Main
- Modeled Pump Station
- Unmodeled Pump Station
- District Boundary

CIP Projects

- Aspen Ave.
- Marshal St.
- Pine St.
- Redwood Rd.
- Sandy Rd.
- South of Highway 580

CVSan

WEST YOST ASSOCIATES

Figure 15

Recommended Capital Improvement Projects

Castro Valley Sanitary District
WWCS Master Plan Update

Last Saved: 1/5/2016 1:40:55 PM \\Wcs-FS01\Walnut Creek\Clients\455 Castro Valley Sanitary District\06-13-03 Dist Engineer\GIS\Figures\Master plan Update\Figure15 Recommended CIP.mxd - rstrbj\aei

Aspen and Pine Trunk Sewer. From Castro Valley Boulevard to Elm Street. New flow splits and upstream flow monitoring data refined this project size from the 2006 Master Plan.

South of I-580 Relief Sewer. From Redwood Road to North 3rd Street. This sewer remains necessary to relieve surcharging. However, project validation flow monitoring is recommended to refine newly-discovered flow splits in the model in order to refine the project size.

6.2 Sensitivity Analysis

In order to determine how sensitive the CIP projects are to the design storm distribution used, a sensitivity analysis was performed using the 10-year, 24-hour storm defined as the Soil Conservation Service Type 1A storm distribution, as shown in Figure 16. This storm distribution has a less severe peak than the design storm used in this Master Plan Update and in the 2006 Master Plan, but is consistent with the methodologies required under typical San Francisco Baykeeper third-party lawsuits, which is becoming a San Francisco Bay industry standard. It should be noted that both design storm distributions shown in Figure 12 and 16 have equal 10-year, 24-hour rainfall volumes over the 24-hour period - but differ in rainfall distribution over time.

Figure 16. SCS Type 1A Design Storm Distribution

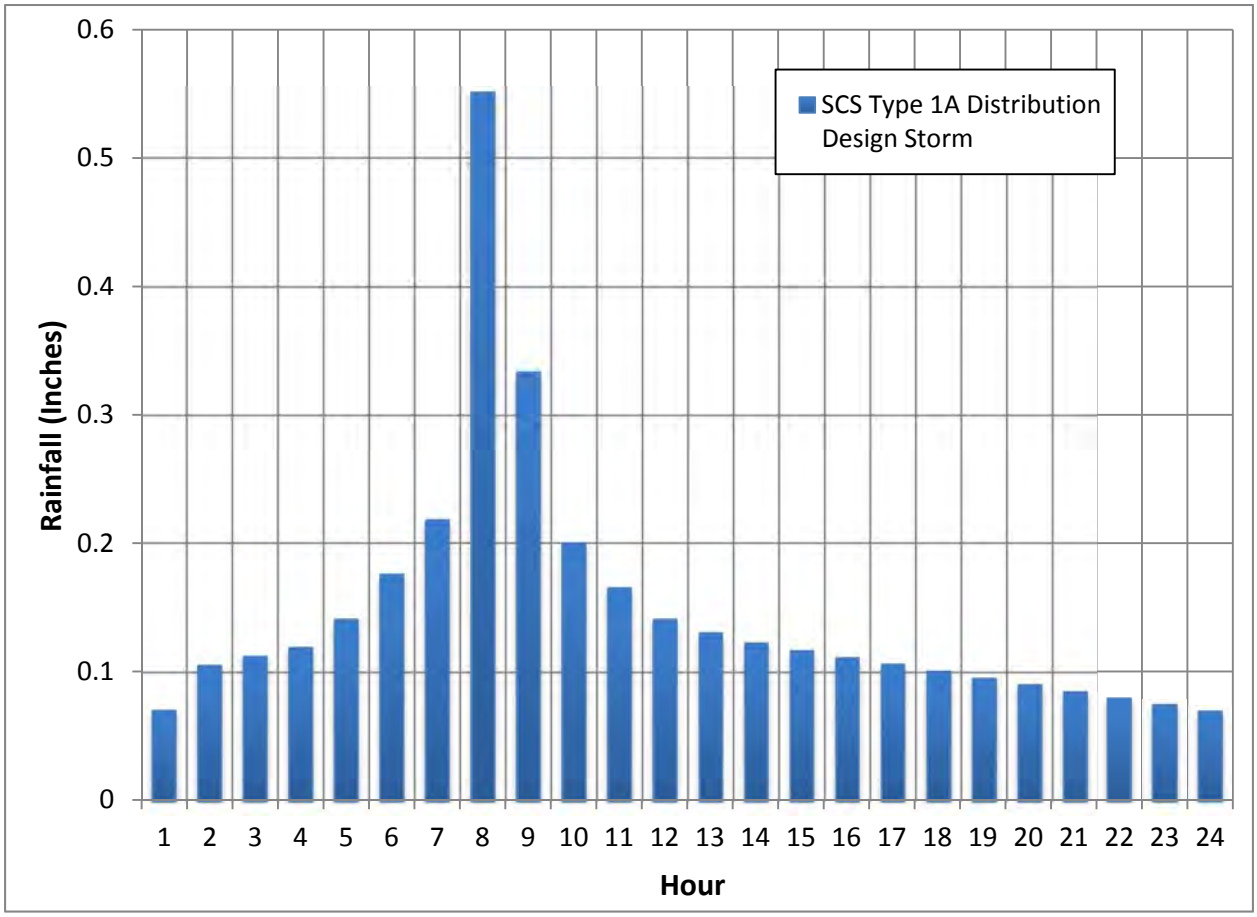

The results of the sensitivity analysis are that while several of the CIP projects would be one or two pipe segments shorter, or of one-size smaller pipe diameter, none of the CIP projects are eliminated by the use of the alternate design storm distribution shown in Figure 16. For the purposes of providing adequate capacity, this minor sensitivity to the design storm distribution was acknowledged by CVSan, but capacity will be provided for the design storm distribution shown in Figure 12, which is slightly more conservative, but very similar in peak to the actual storm metered on December 12, 2015.

6.3 Other Recommendations

Other recommendations developed during the course of this analysis include the following:

- Ongoing Monitoring
- Inflow Reduction Program
- Private Lateral Rehabilitation Program
- Hydraulic Model Update

6.3.1 Ongoing Monitoring

The hydraulic model results indicate some uncertainty about the flow path in the portion of the system where the trunk lines flowing south down Forest Avenue and west along Castro Valley Boulevard. Before the implementation of the South of I-580 Relief Sewer project, additional flow monitoring is recommended at points 1 through 4 indicated on Figure 17 in order to confirm the size and scope of this project. If hydraulically impractical, then points 5 through 7 would serve as an acceptable alternative.

In addition, monitoring is recommended on the Stanton Avenue and Lake Chabot Road trunk lines to verify that the surcharging indicated by PWWF modeling is not severe enough to justify capital improvements. The specific flow monitoring locations can be determined at a later time.

6.3.2 Inflow Reduction Program

As shown in Table 4, metered flows from M-3W revealed that for a small tributary area, flows increased 50-times during wet weather – producing 0.46 in I/I from this small area, indicating the presence of a significant I/I source (see Figure 18).

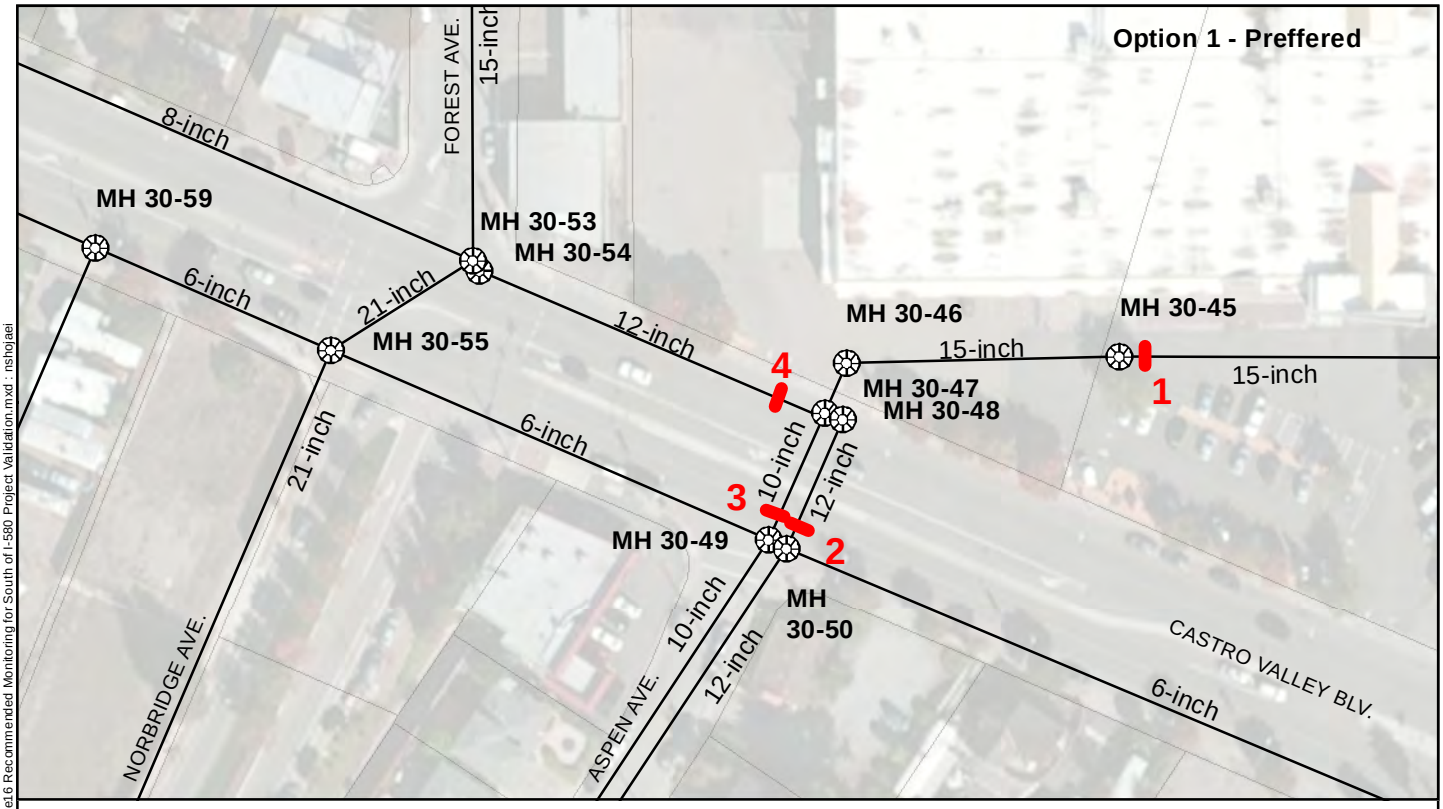

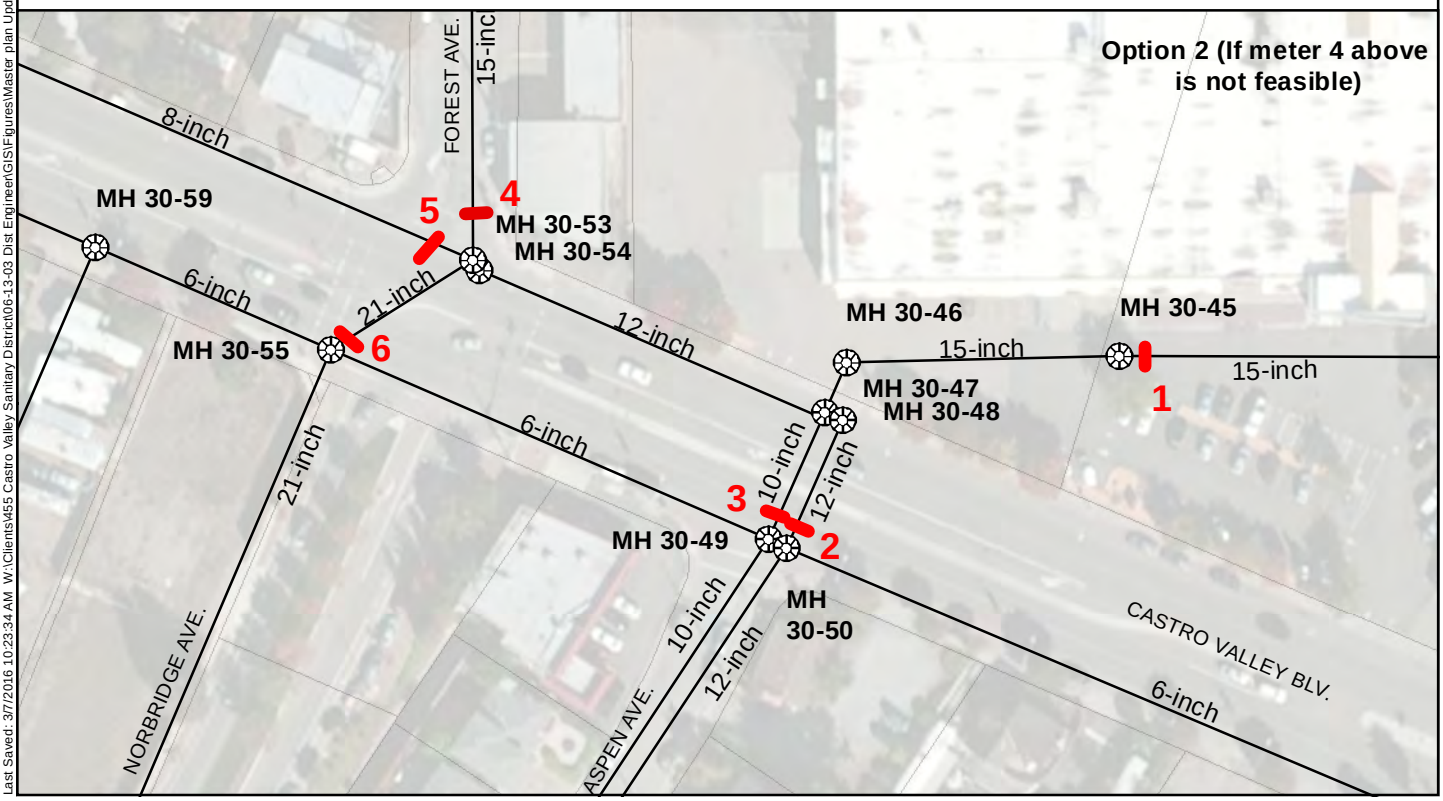

Last Saved: 3/7/2016 10:23:34 AM W:\Clients\455 Castro Valley Sanitary District\06-13-03 Dist Engineer\GIS\Figures\Master plan Update\Figure16 Recommended Monitoring for South of I-580 Project Validation.mxd - nshojaei

Symbology

- Monitoring Location
- Manhole
- Gravity Main
- Force Main

N

0 50 100
Scale in Feet

CVSan

WEST YOST ASSOCIATES

Figure17

Recommended Monitoring for South of I-580 Project Validation

Castro Valley Sanitary District
WWCS Master Plan Update

Figure 18. I/I Identified by Sub-basin Flow Monitoring at M-3W

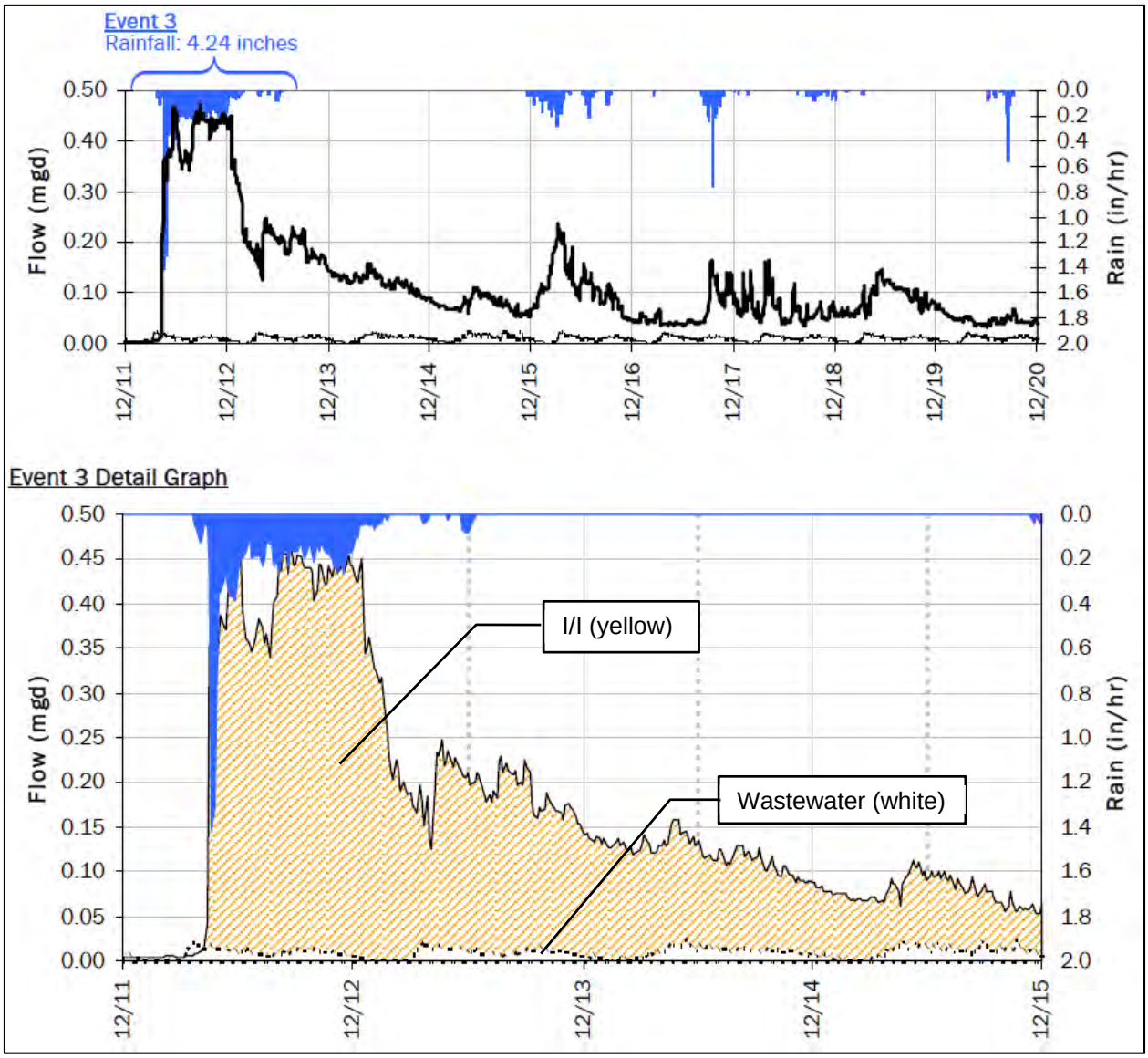

Source: Castro Valley Sanitary District Sewer Flow Monitoring and Inflow/Infiltration Study, V&A, June 2015 (2015 Flow Monitoring Study).

In a tributary area this small, it is highly unlikely that this magnitude of I/I is coming simply from deteriorated sewer mains or laterals. Rather, it is likely that there is a direct creek or storm drain inflow source or potentially neighborhood-wide downspout connections. It is highly recommended that CVSan conduct smoke testing in Basin 3W in an attempt to identify the source of I/I here so that it can be removed. Appendix F includes a Smoke Testing Work Plan to facilitate these investigations.

Additionally, the Phase 2 Alternative Analysis included a summary of CVSan's past smoke testing activities – which identified several possible direct storm drain connections. Appendix G includes details on the defects identified in 2012 by smoke testing. It is highly recommended that CVSan investigate the possible storm drain cross connections immediately to prevent 2016 El Niño storm impacts, and follow up in 2016/17 with permanent disconnections.

As a part of CVSan's ongoing I/I reduction program, CVSan's should develop an Inflow Reduction Program to:

- Continue to identify sources of I/I including conducting sub-basin flow monitoring and smoke testing
- Address known storm drain cross connections
- Enforce inflow source repairs and/or disconnections on private property
- Identify and prioritize other I/I identification and reduction methods such as FELL investigations in known problem basins

6.3.3 Private Lateral Rehabilitation Program

CVSan has a proactive Private Lateral Grant Program that has been extremely successful in past years. In fact, annual grant funds are at times depleted within only a few months of the annual funding date. It is recommended that CVSan increase its efforts to control and reduce RDII by expanding the funds provided for private lateral inspection and rehab. RDII from private laterals has been found to account for approximately 50 percent of the total RDII in several Bay Area cities. This program to inspect and rehabilitate private service laterals provides on-going RDII control at low cost to CVSan.

6.3.4 Hydraulic Model Update

The existing hydraulic model should be updated periodically to reflect changes in the collection system, including sewer rehabilitation and construction of gravity sewer capacity upgrades.

APPENDIX A

Flow Split Documentation

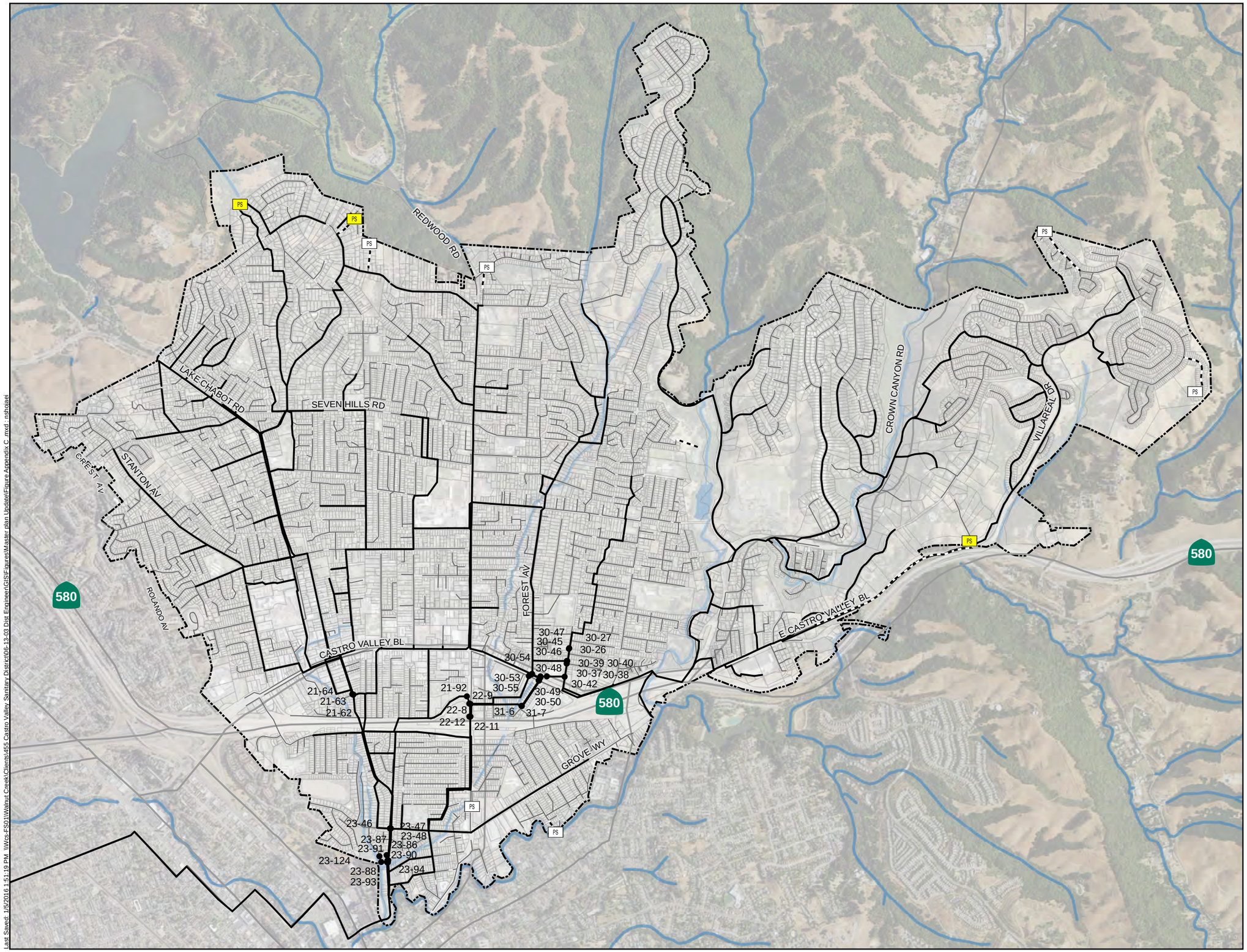

N

0 0.2 0.4
Miles

Symbology

- Updated Flow Split Manhole
- Modeled Gravity Main
- Unmodeled Gravity Main
- Modeled Pump Station
- Unmodeled Pump Station
- Force Main
- District Boundary

CVSan

WEST YOST ASSOCIATES

Manholes with Updated Flow Split Information

Castro Valley Sanitary District
WWCS Master Plan Update

Last Saved: 1/5/2016 1:51:19 PM \\Wys-FS01\Walnut Creek\Clients\455 Castro Valley Sanitary District\06-13-03 Dist Engineer\GIS\Figures\Master plan Update\Figure Appendix C.mxd nsholjaei

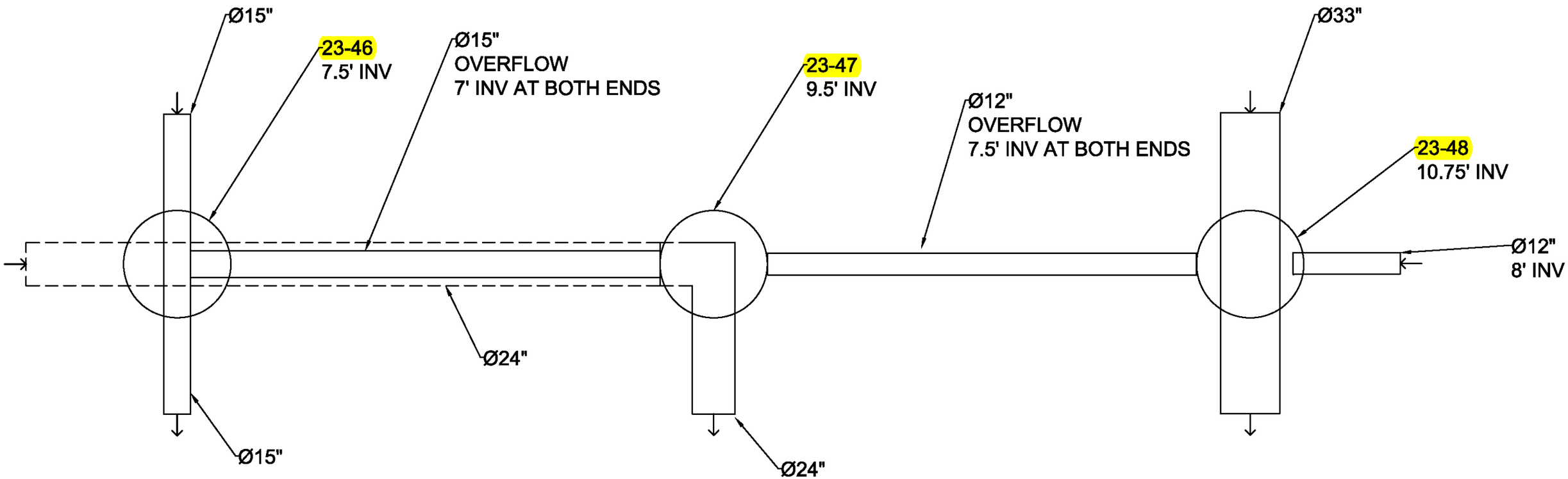
Ø15"
23-46
7.5' INV
Ø15"
OVERFLOW
7' INV AT BOTH ENDS
23-47
9.5' INV
Ø12"
OVERFLOW
7.5' INV AT BOTH ENDS
Ø33"
23-48
10.75' INV
Ø12"
8' INV
Ø24"
Ø15"
Ø24"

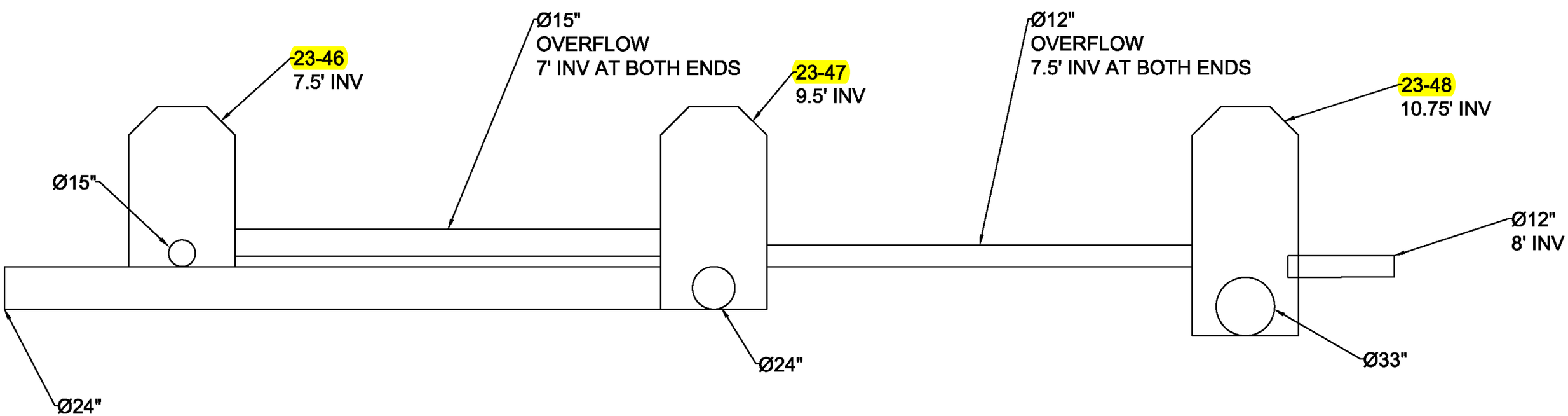
23-46
7.5' INV
Ø15"
OVERFLOW
7' INV AT BOTH ENDS
23-47
9.5' INV
Ø12"
OVERFLOW
7.5' INV AT BOTH ENDS
23-48
10.75' INV
Ø15"
Ø12"
8' INV
Ø24"
Ø33"
Ø24"

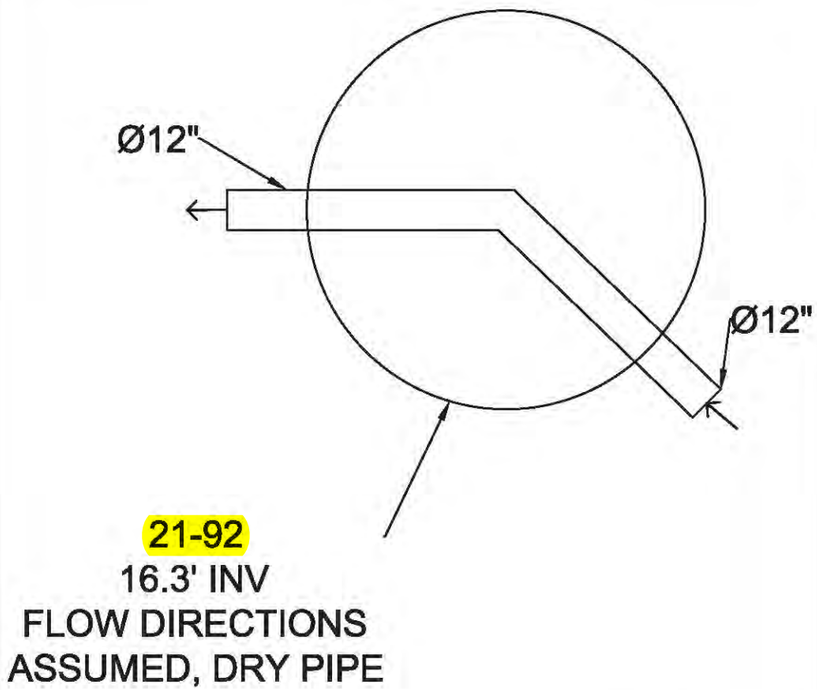
Ø12"
Ø12"
21-92
16.3' INV
FLOW DIRECTIONS
ASSUMED, DRY PIPE

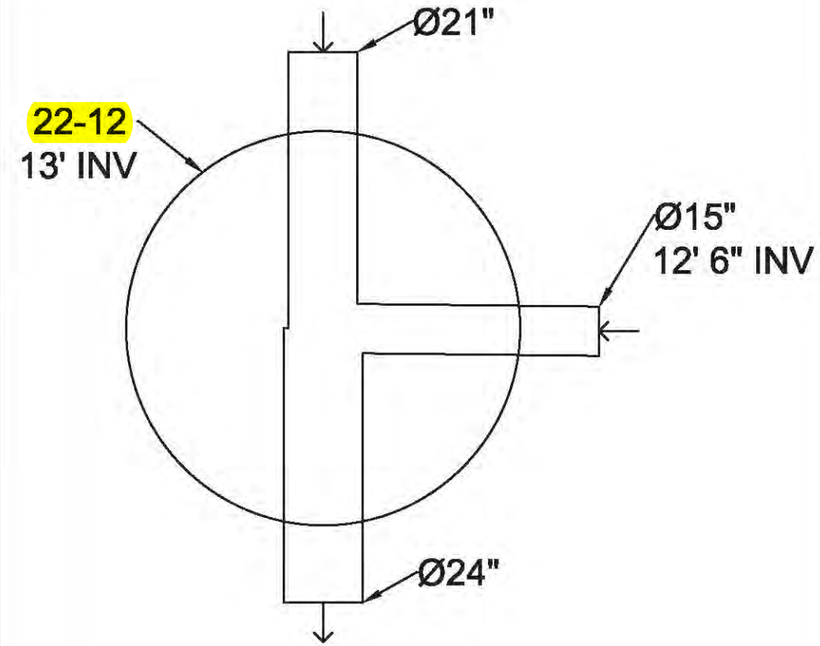
Ø21"
22-12
13' INV
Ø15"
12' 6" INV
Ø24"

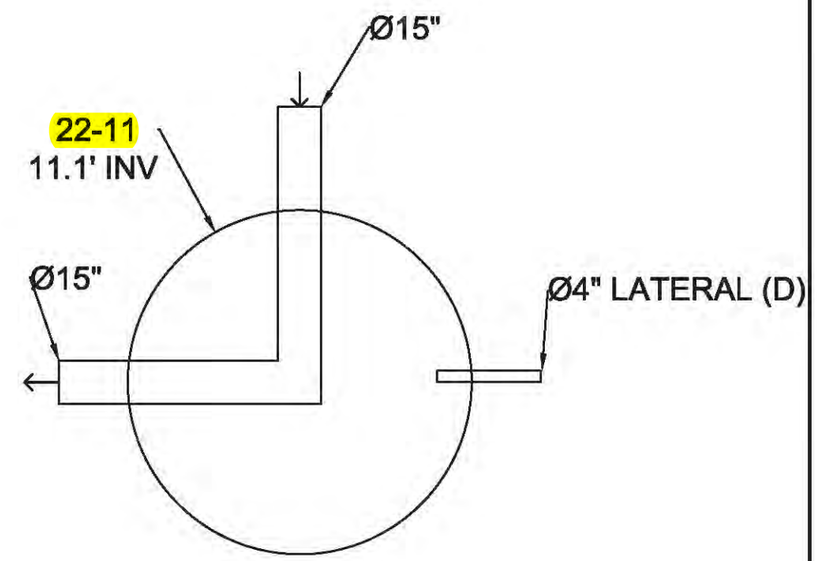
Ø15"
22-11
11.1' INV
Ø15"
Ø4" LATERAL (D)

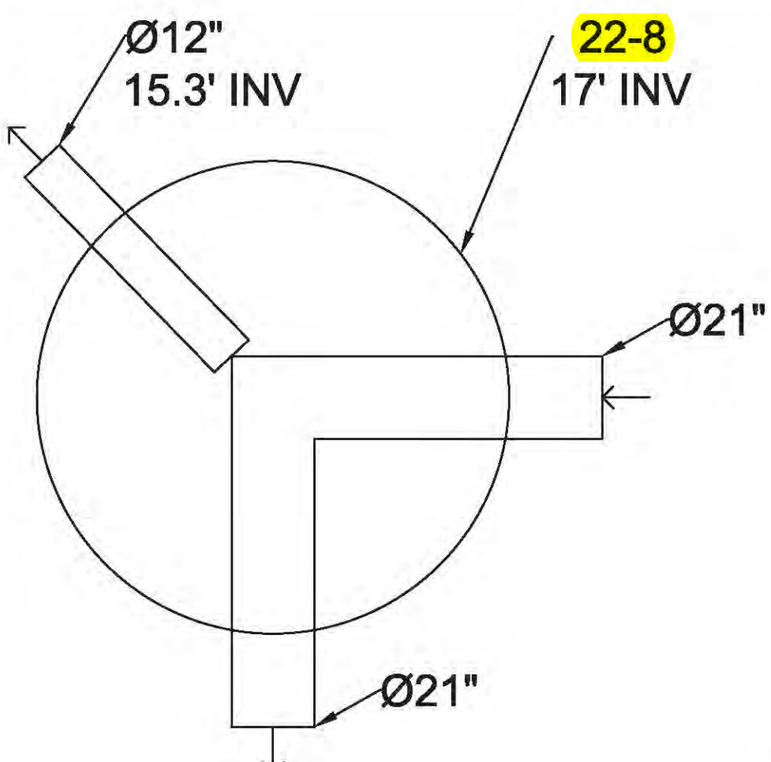
Ø12"
15.3' INV
22-8
17' INV
Ø21"
Ø21"

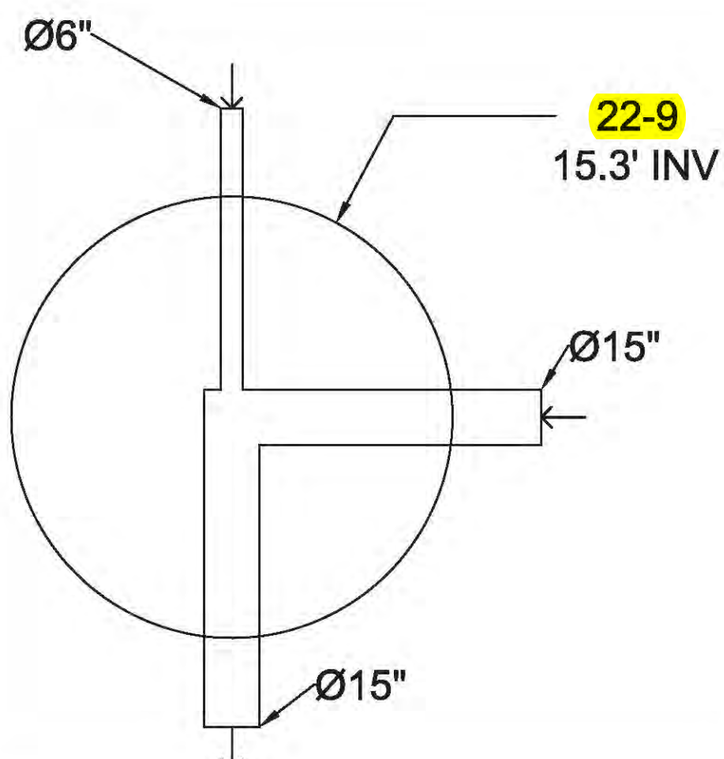
Ø6"
22-9
15.3' INV
Ø15"
Ø15"

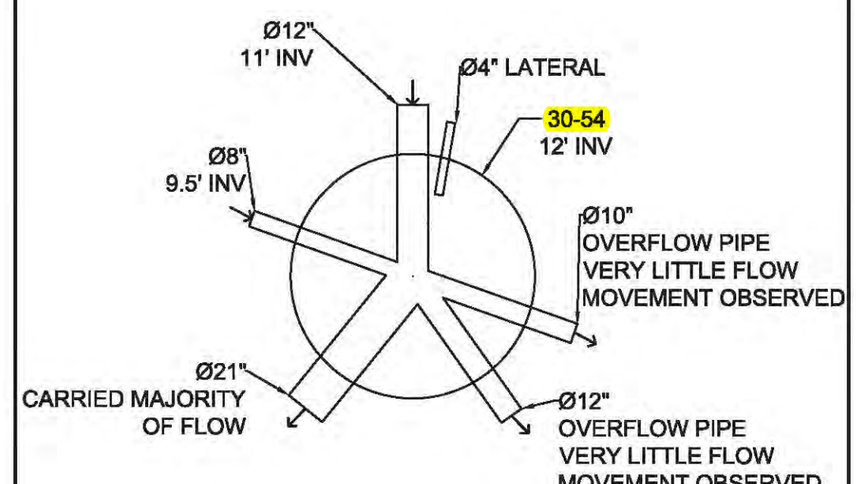
Ø12"
11' INV
Ø4" LATERAL
30-54
12' INV
Ø8"
9.5' INV
Ø10"
OVERFLOW PIPE
VERY LITTLE FLOW
MOVEMENT OBSERVED
Ø21"
CARRIED MAJORITY
OF FLOW
Ø12"
OVERFLOW PIPE
VERY LITTLE FLOW
MOVEMENT OBSERVED

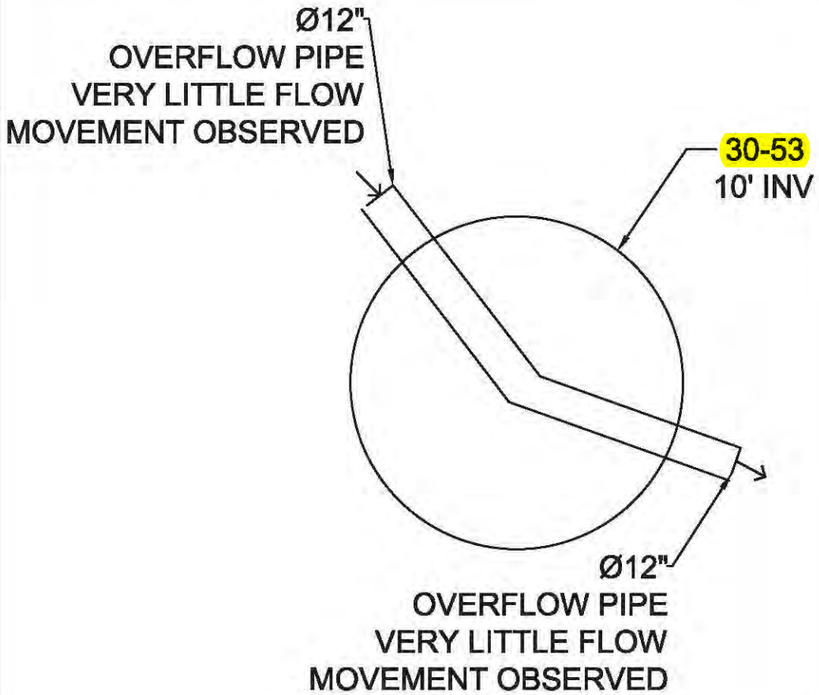
Ø12"
OVERFLOW PIPE
VERY LITTLE FLOW
MOVEMENT OBSERVED
30-53
10' INV
Ø12"
OVERFLOW PIPE
VERY LITTLE FLOW
MOVEMENT OBSERVED

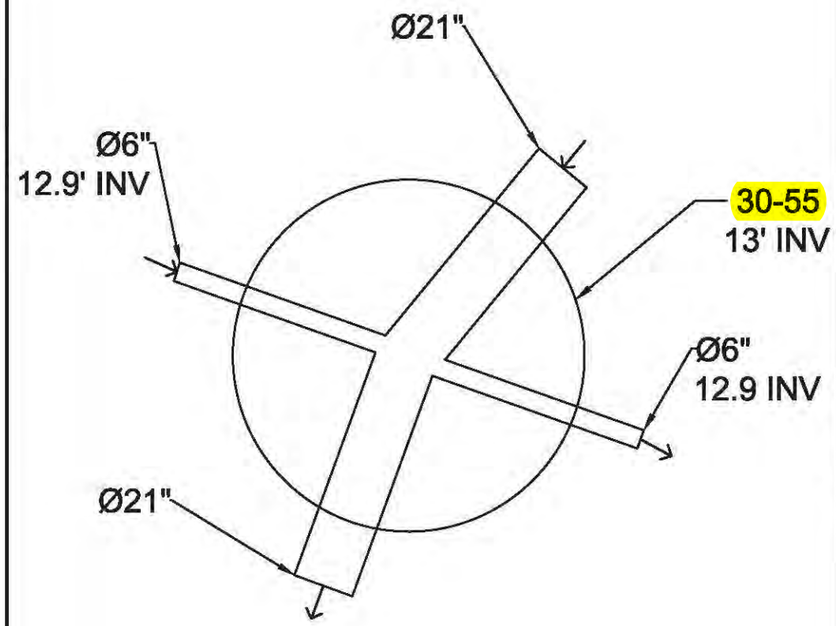
Ø21"
Ø6"
12.9' INV
30-55
13' INV
Ø6"
12.9 INV
Ø21"

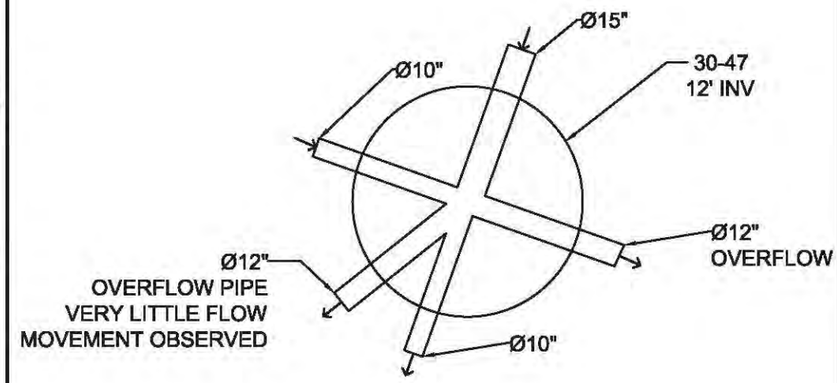
Ø15"
Ø10"
30-47
12' INV
Ø12"
OVERFLOW
Ø12"
OVERFLOW PIPE
VERY LITTLE FLOW
MOVEMENT OBSERVED
Ø10"

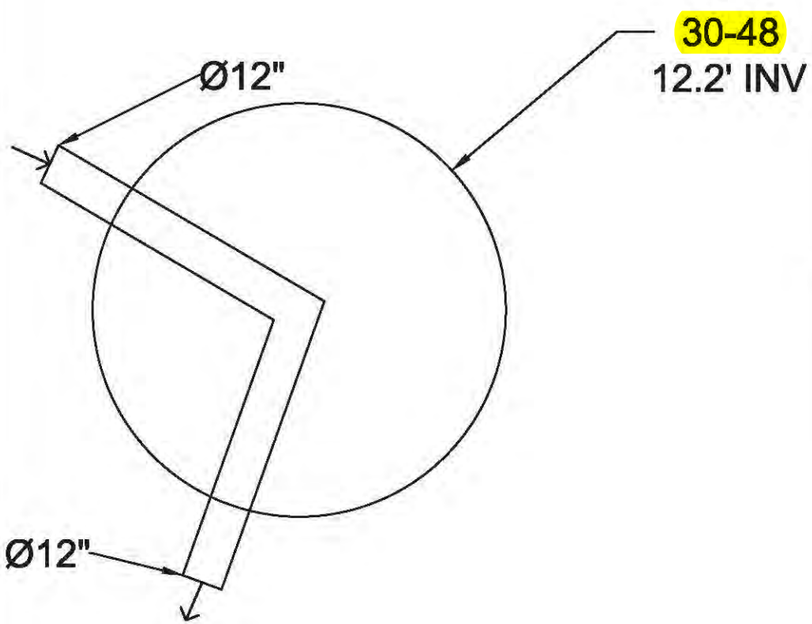
30-48
12.2' INV
Ø12"
Ø12"

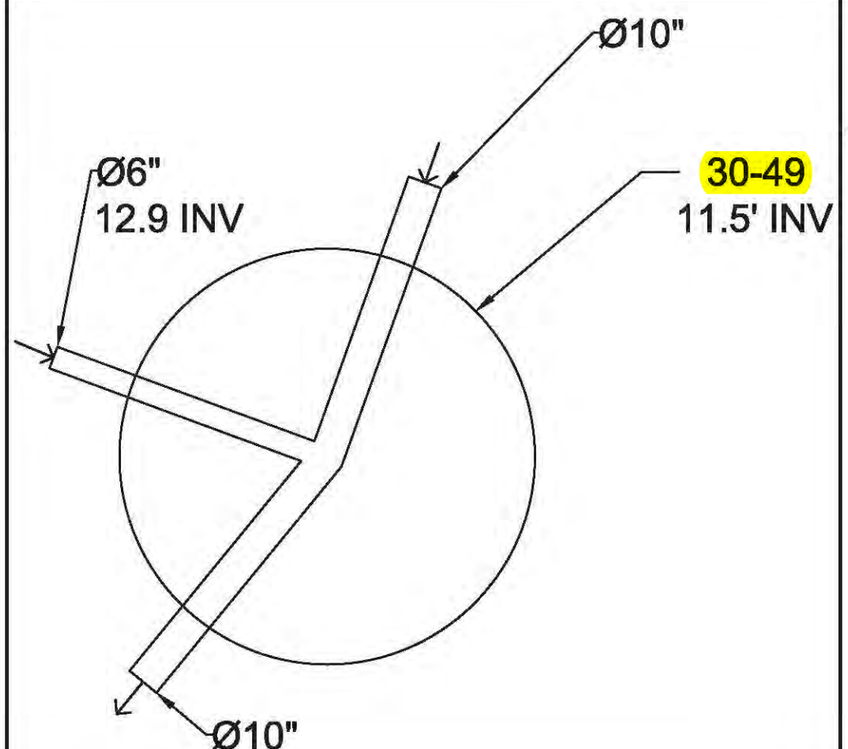
Ø10"
Ø6"
12.9 INV
30-49
11.5' INV
Ø10"

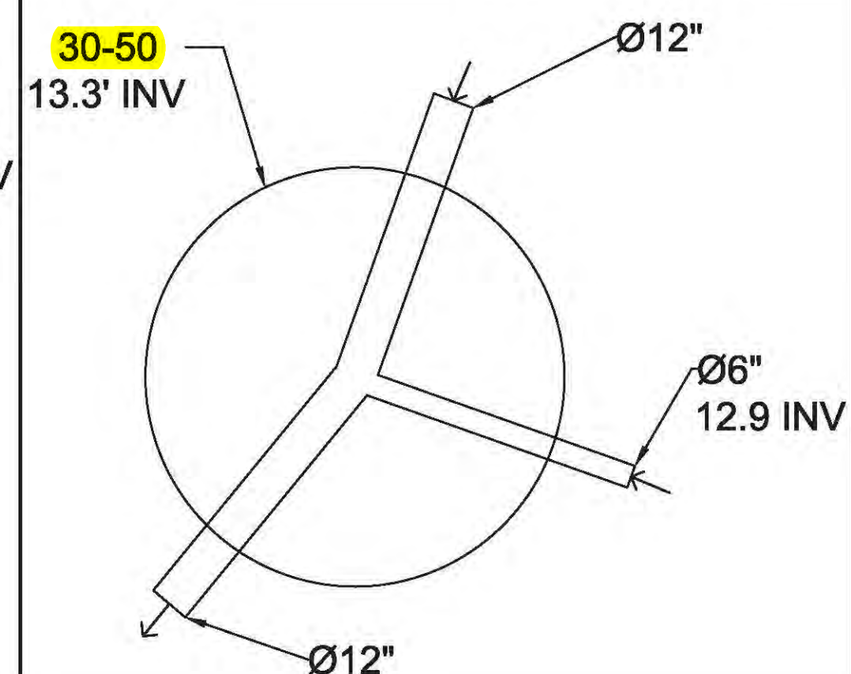
30-50
13.3' INV
Ø12"
Ø6"
12.9 INV
Ø12"

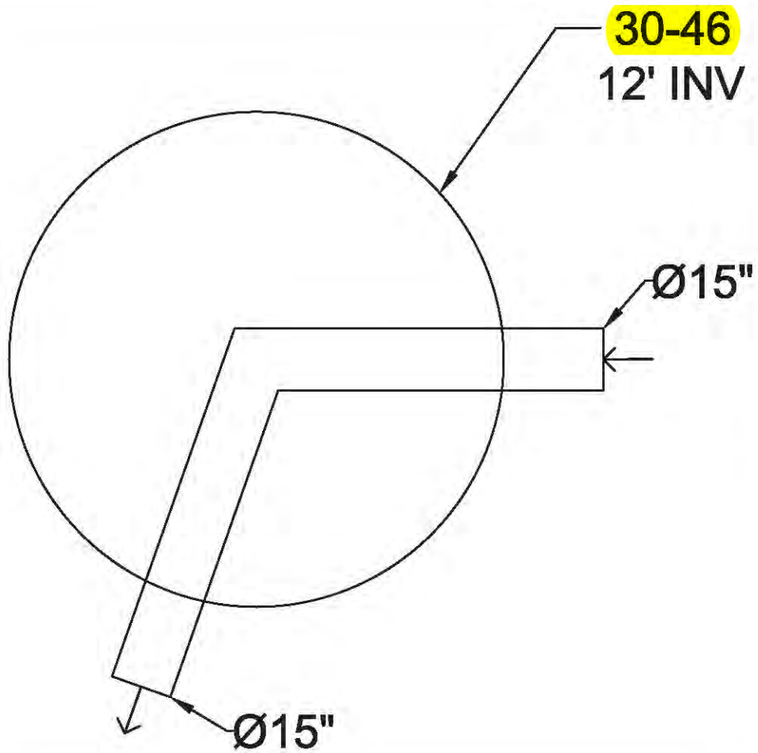
30-46
12' INV
Ø15"
Ø15"

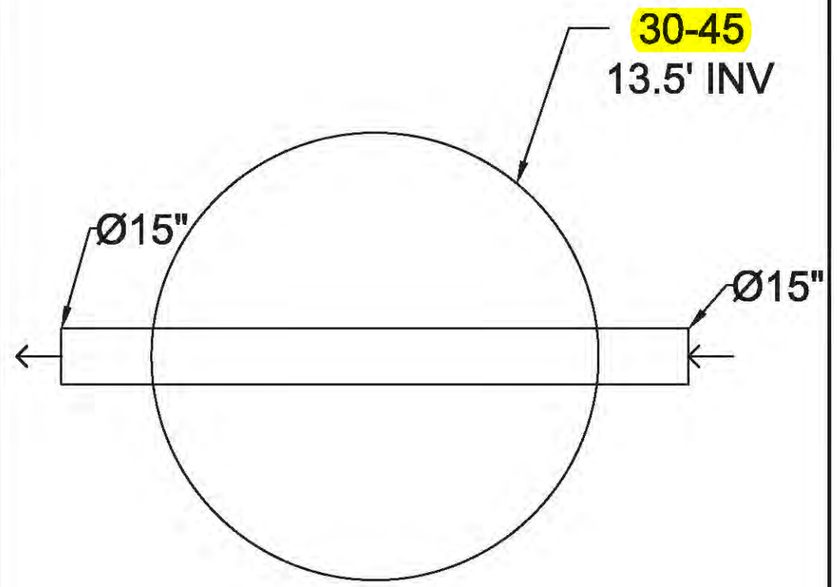
30-45
13.5' INV
Ø15"
Ø15"

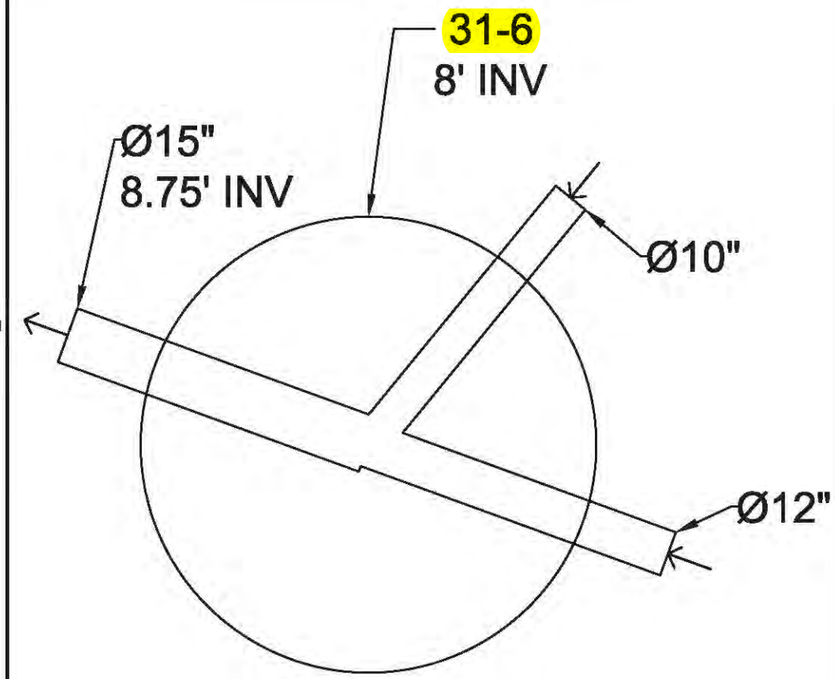
31-6
8' INV
Ø15"
8.75' INV
Ø10"
Ø12"

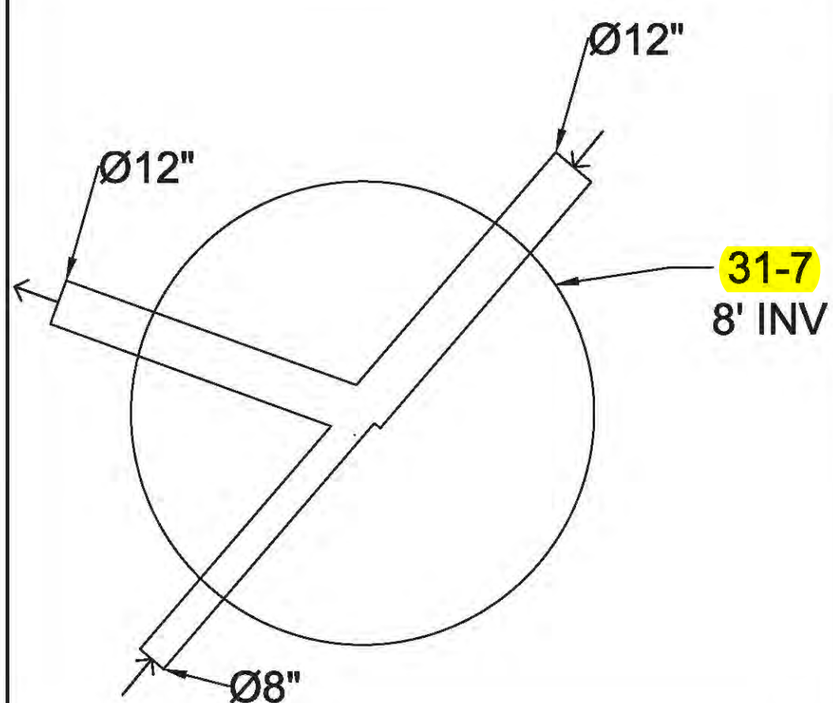
Ø12"
Ø12"
31-7
8' INV
Ø8"

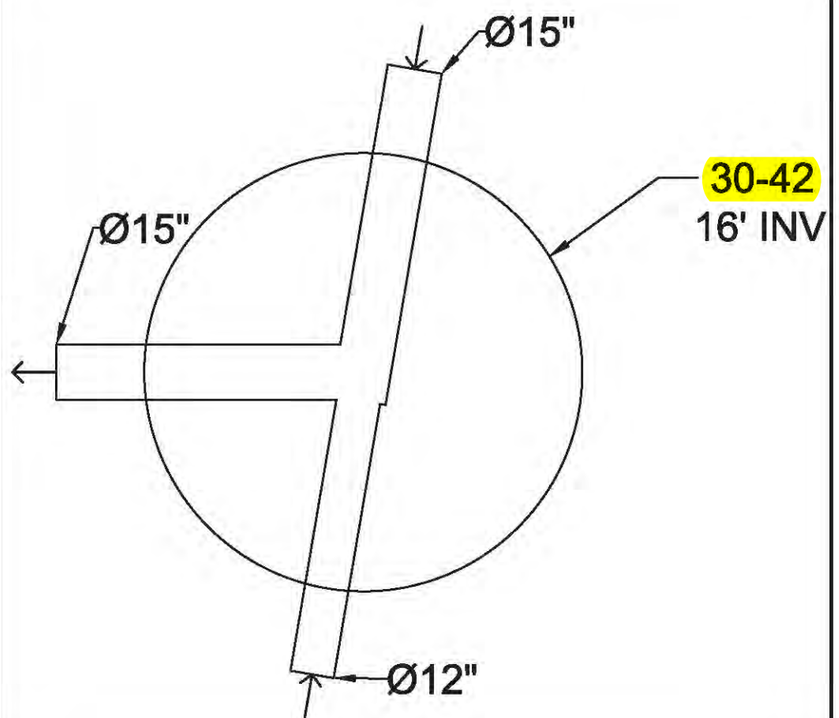
Ø15"
30-42
16' INV
Ø15"
Ø12"

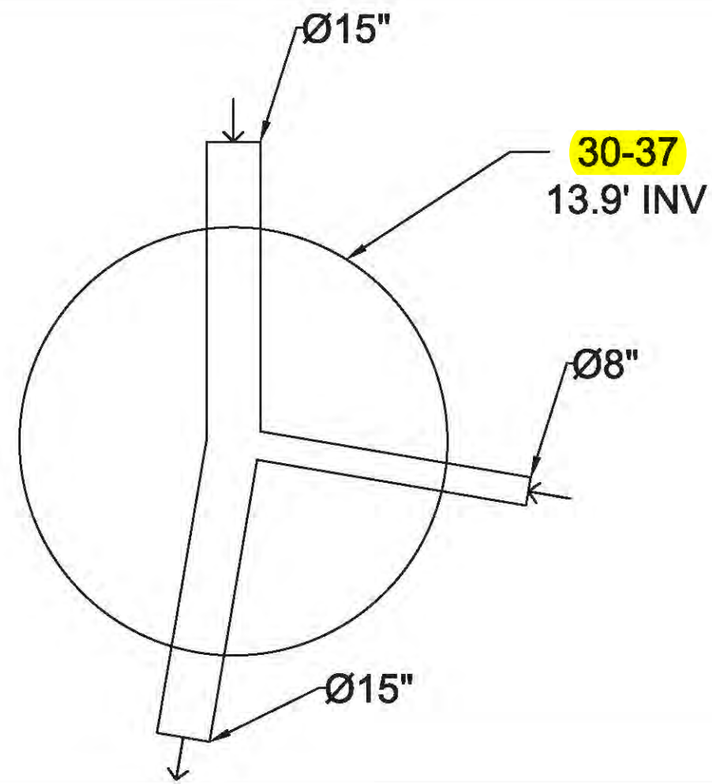
Ø15"
30-37
13.9' INV
Ø8"
Ø15"

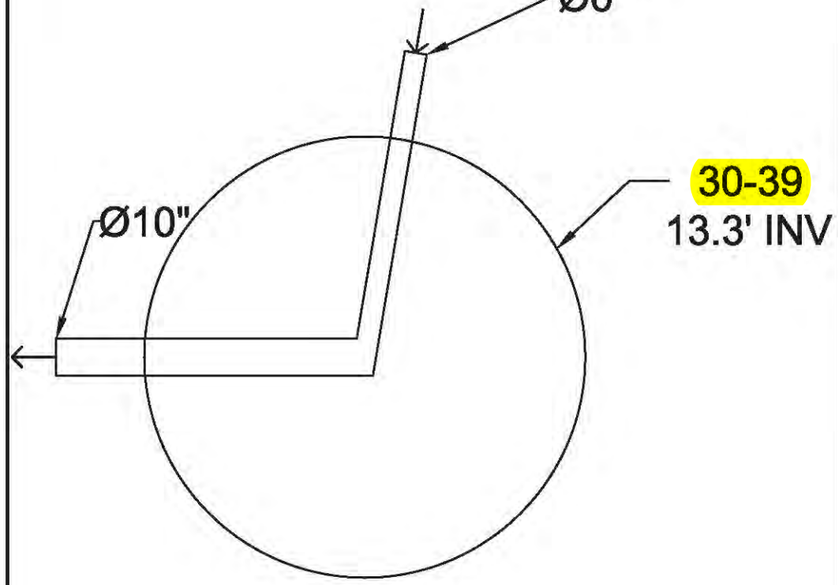
Ø6"
Ø10"
30-39
13.3' INV

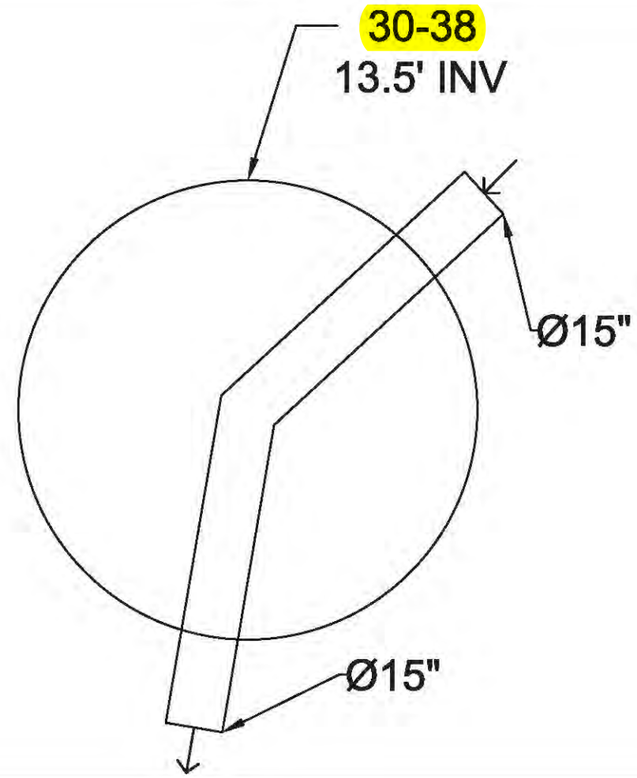
30-38
13.5' INV
Ø15"
Ø15"

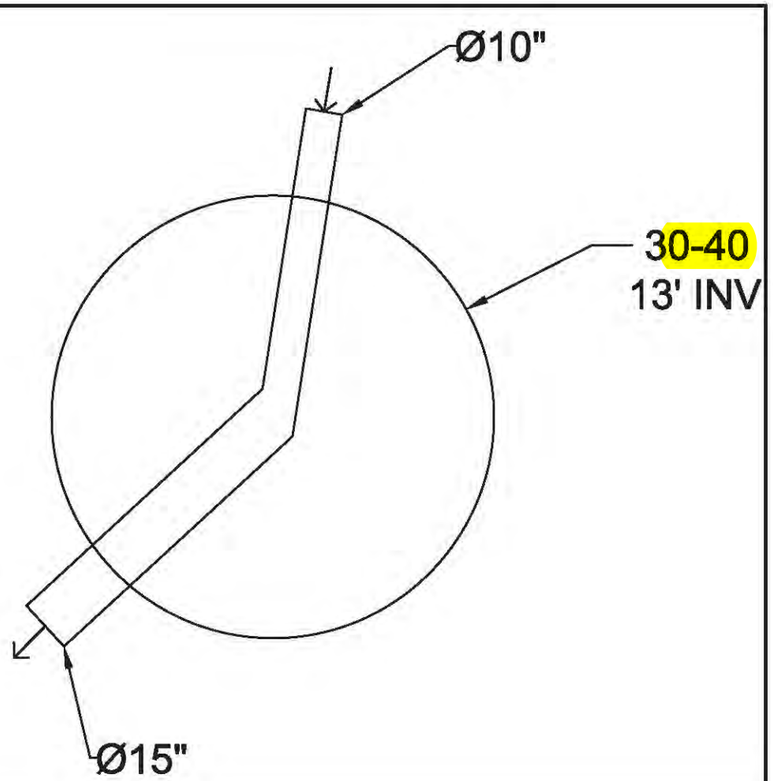
Ø10"
30-40
13' INV
Ø15"

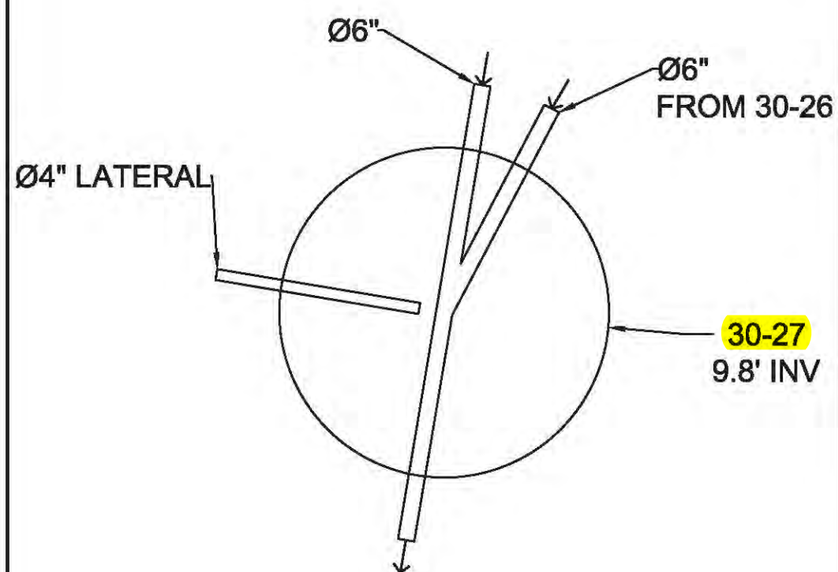
Ø6"
Ø6"
FROM 30-26
Ø4" LATERAL
30-27
9.8' INV

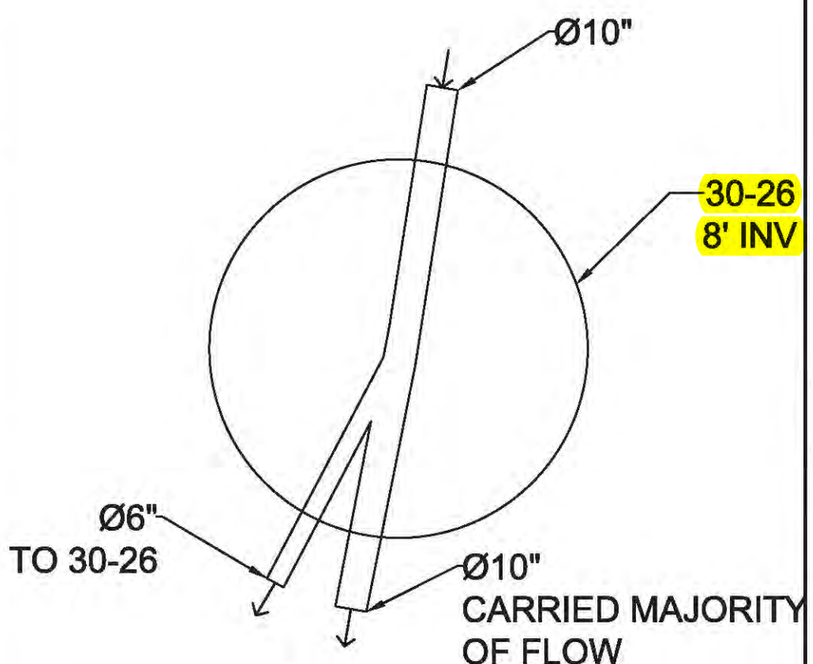
Ø10"
30-26
8' INV
Ø6"
TO 30-26
Ø10"
CARRIED MAJORITY
OF FLOW

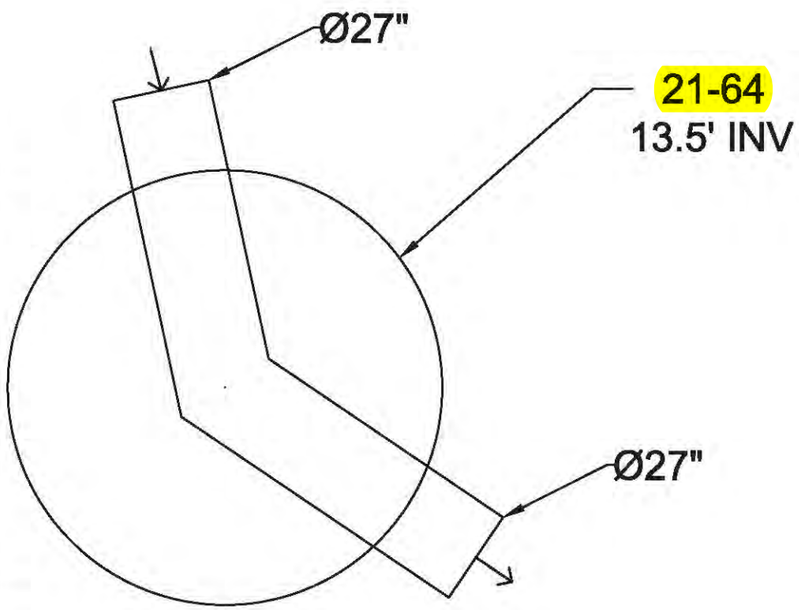
Ø27"
21-64
13.5' INV
Ø27"

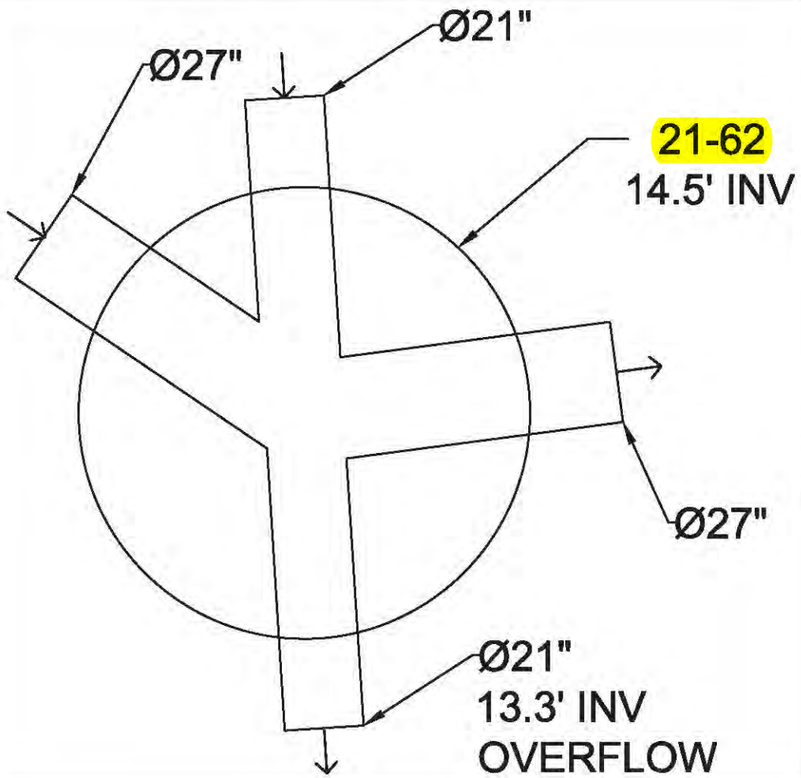

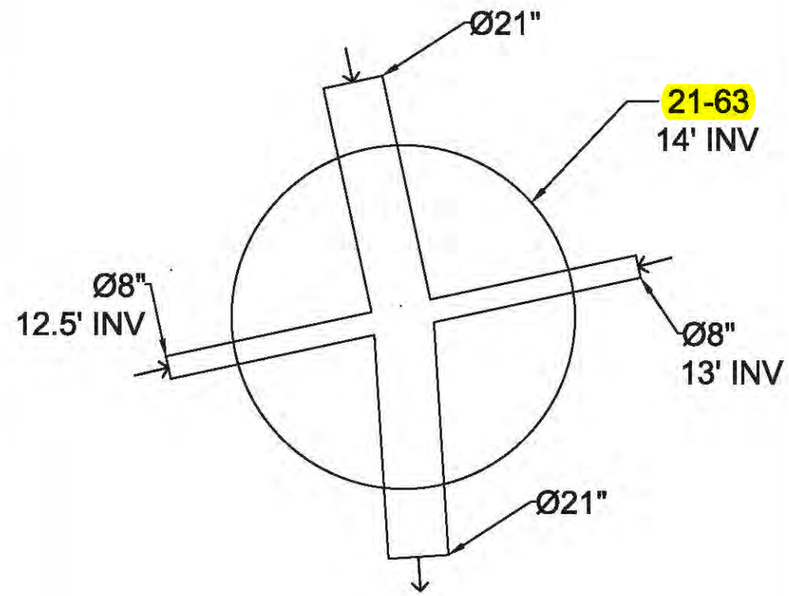

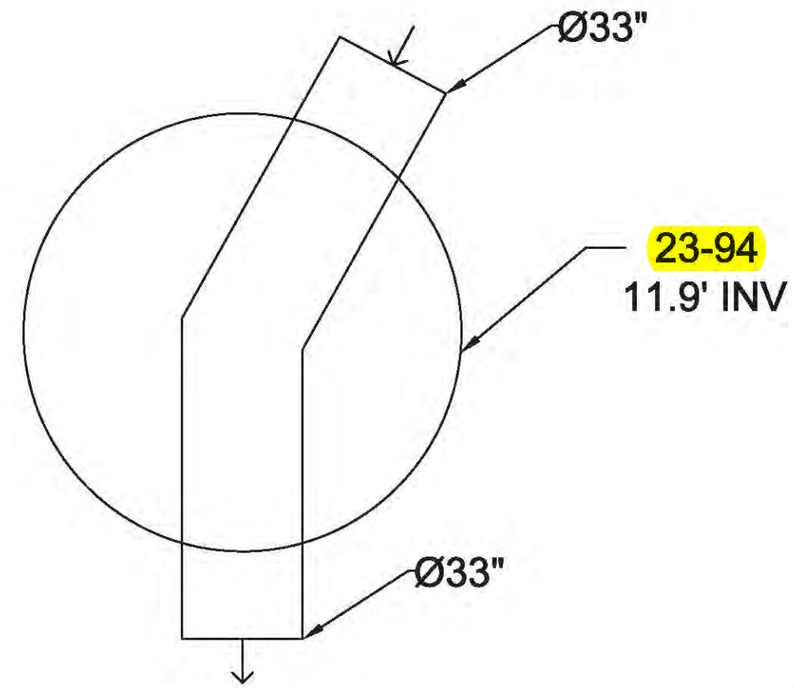

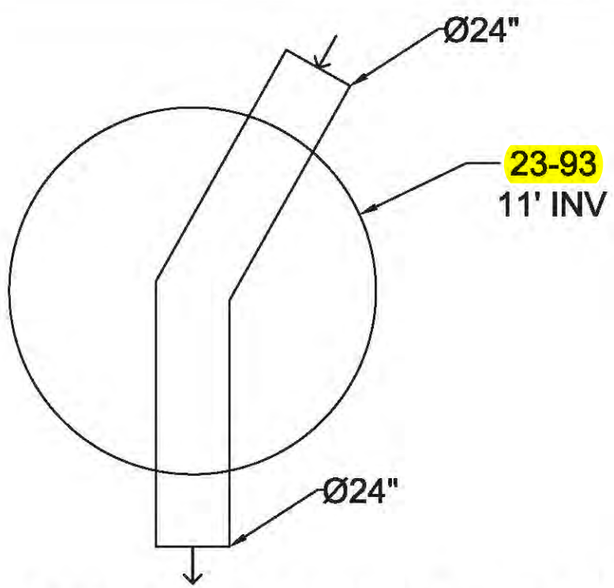

RECORD DRAWINGS DO NOT INDICATE 23-91_23-93 WAS EVER CONSTRUCTED.
SITE VISITS REVEALED PIPES AS SHOWN.
23-90_23-93 CCTV INSPECTION CONFIRMS 23-91_23-93 DOES NOT EXIST. NO CCTV INSPECTION TO VERIFY 23-90_23-91.
.

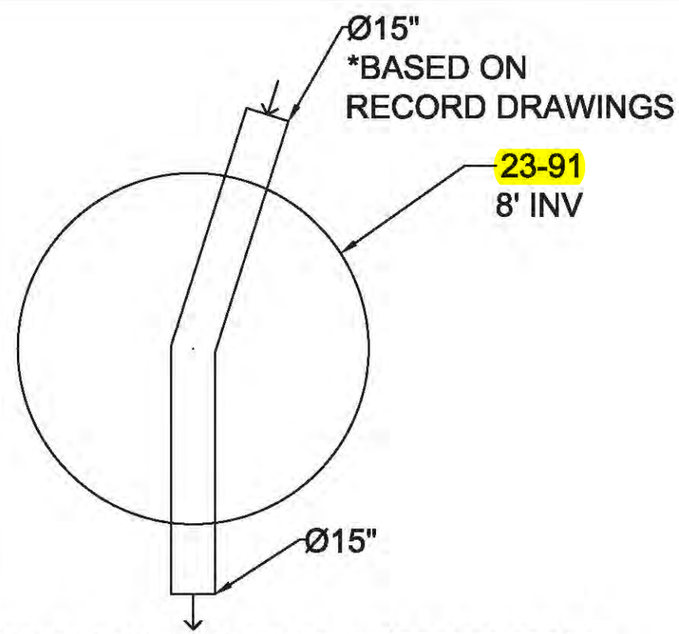

RECORD DRAWINGS DO NOT INDICATE 23-90_23-91 & 23-91_23-93 WERE EVER CONSTRUCTED.
SITE VISITS REVEALED PIPES AS SHOWN.
23-90_23-93 CCTV INSPECTION CONFIRMS 23-91_23-93 DOES NOT EXIST. NO CCTV INSPECTION TO VERIFY 23-90_23-91.

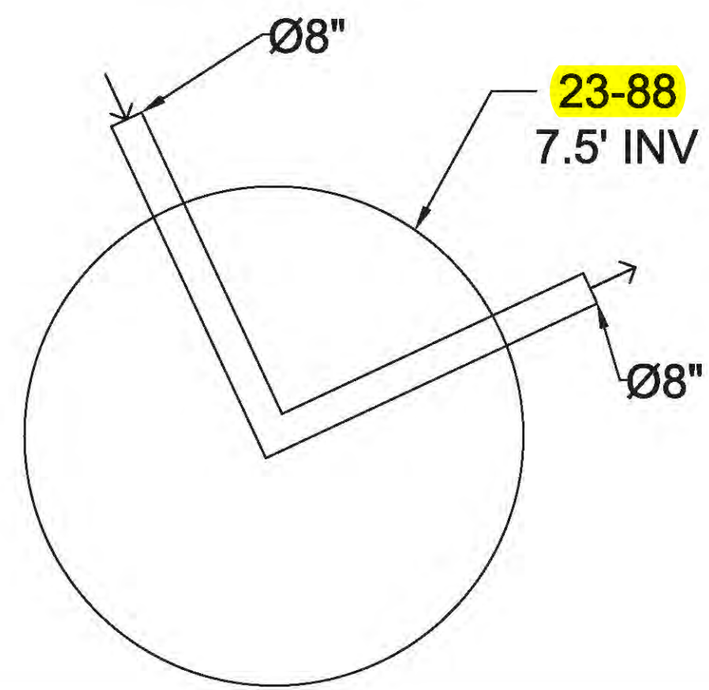

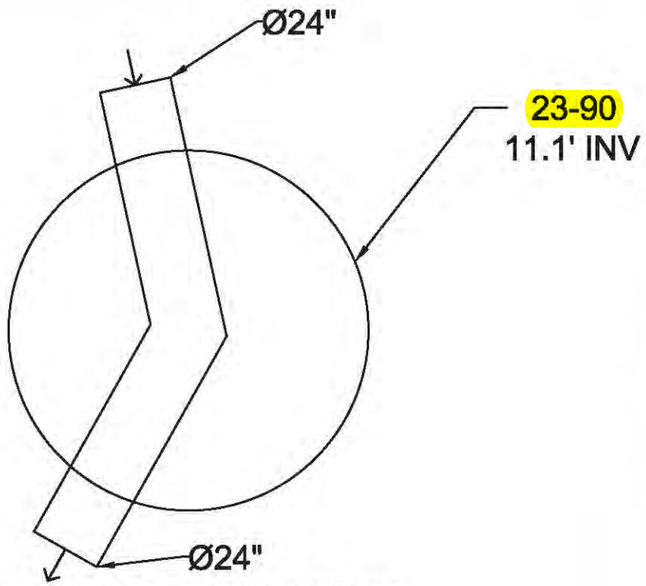

RECORD DRAWINGS DO NOT INDICATE
23-90_23-91 WAS EVER CONSTRUCTED.
SITE VISITS REVEALED PIPES AS SHOWN.
NO CCTV TO VERIFY.

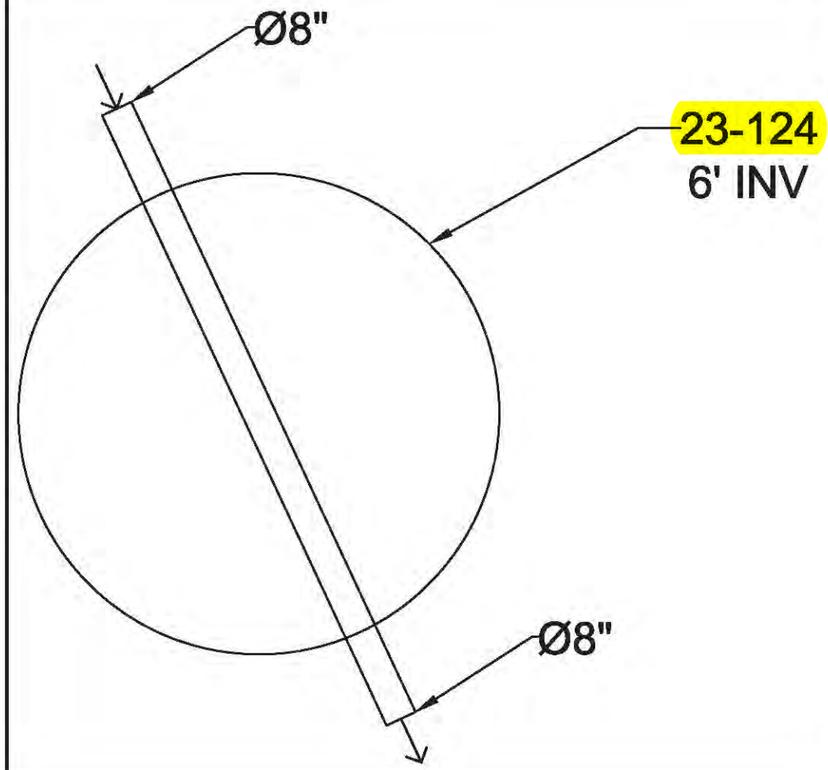

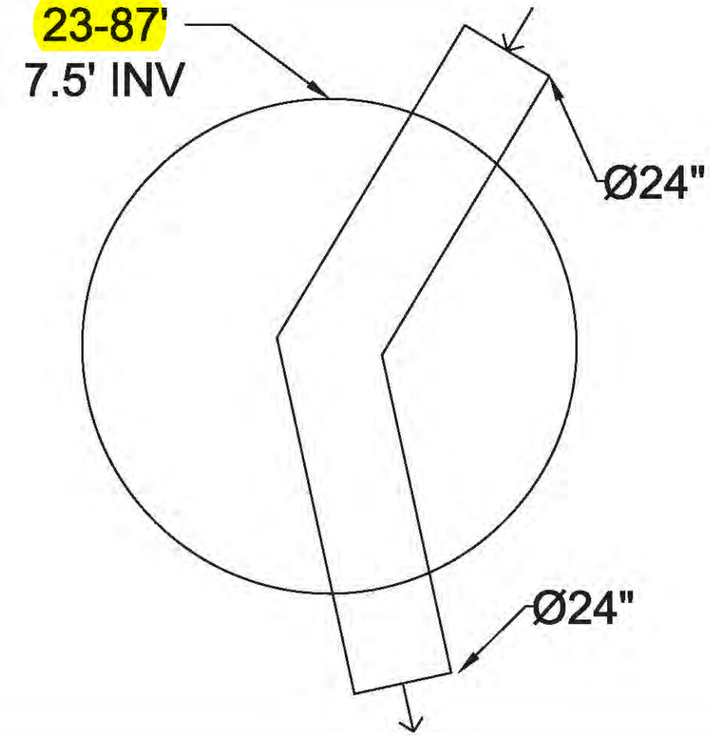

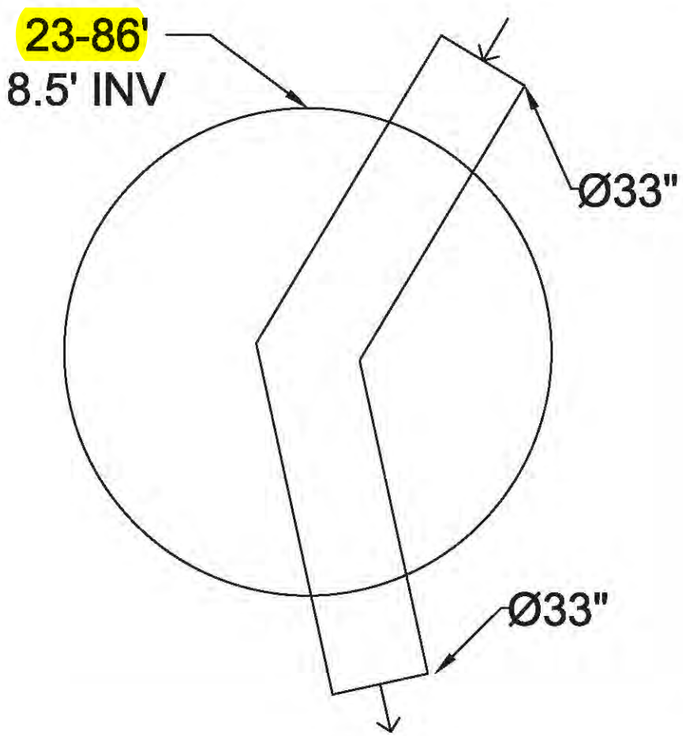

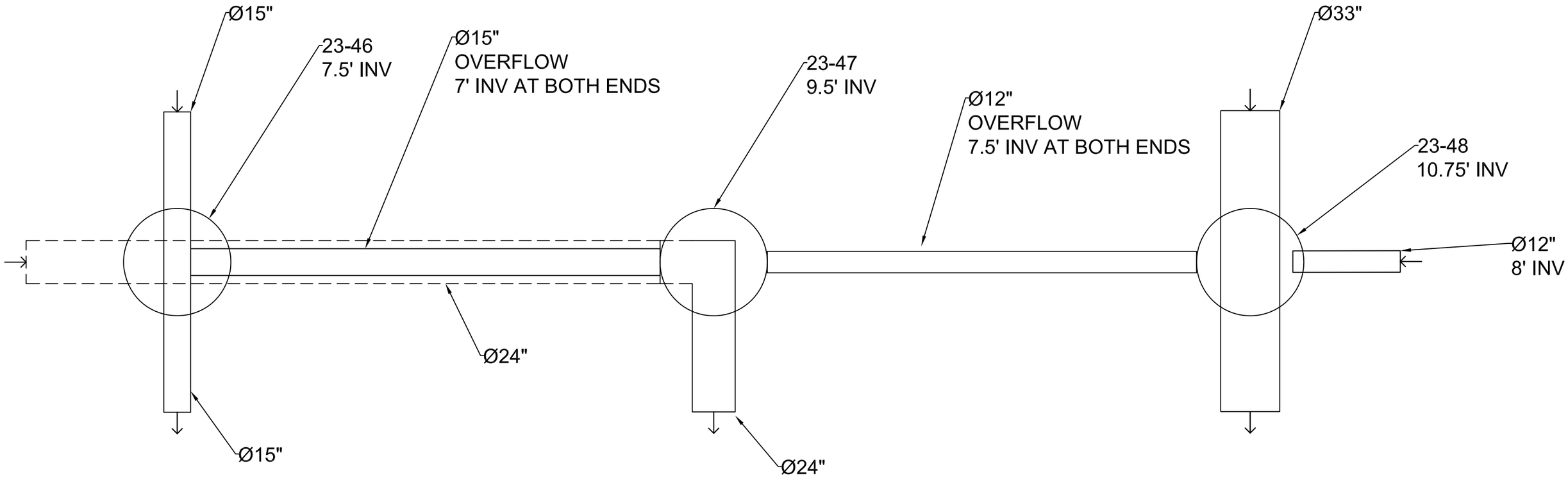
Ø15"
23-46
7.5' INV
Ø15"
OVERFLOW
7' INV AT BOTH ENDS
23-47
9.5' INV
Ø12"
OVERFLOW
7.5' INV AT BOTH ENDS
Ø33"
23-48
10.75' INV
Ø12"
8' INV
Ø24"
Ø15"
Ø24"

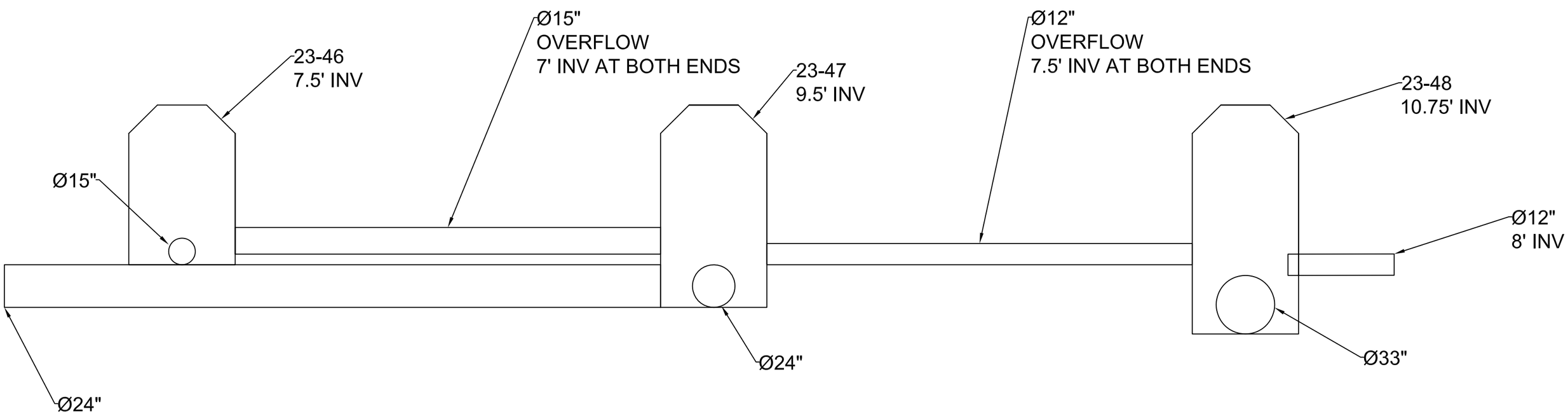
23-46
7.5' INV
Ø15"
OVERFLOW
7' INV AT BOTH ENDS
23-47
9.5' INV
Ø12"
OVERFLOW
7.5' INV AT BOTH ENDS
23-48
10.75' INV
Ø15"
Ø12"
8' INV
Ø24"
Ø33"
Ø24"

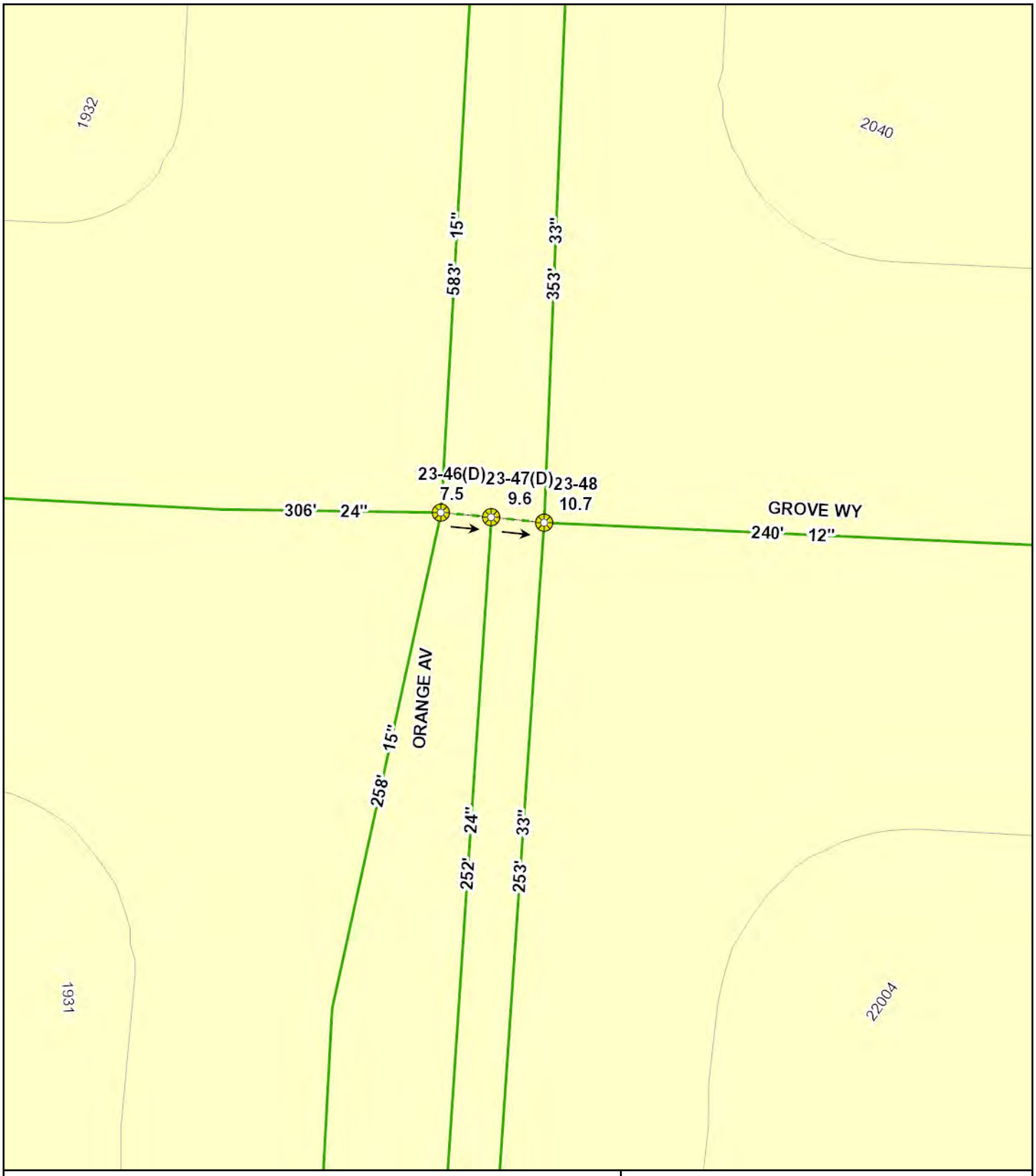

CVSan

N

1 : 174

0 14 Ft

Sanitary Sewer System
Castro Valley, California

10/19/2015

APPENDIX B

Dry Weather Calibration Plots

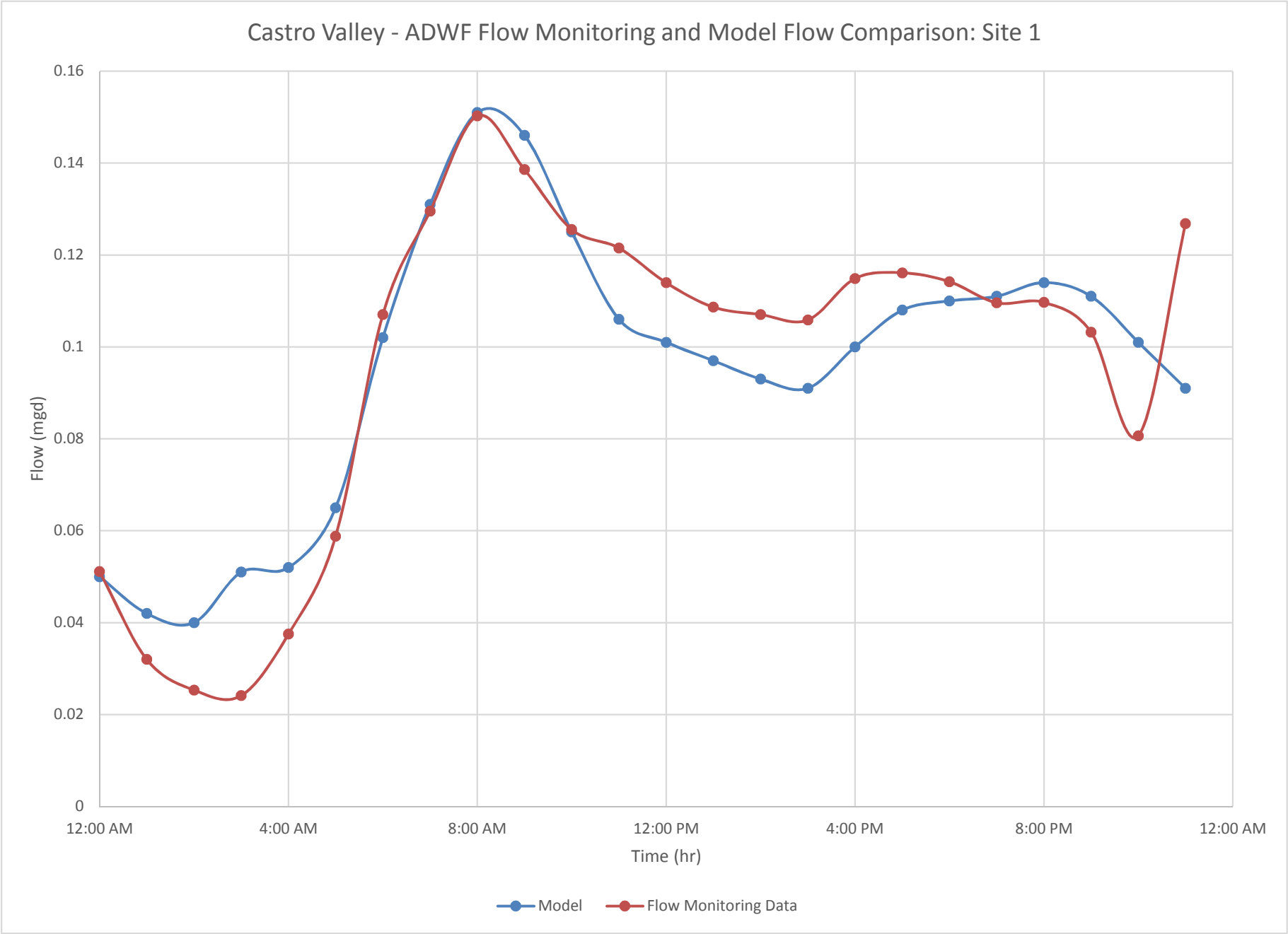
Castro Valley - ADWF Flow Monitoring and Model Flow Comparison: Site 1
0.16
0.14
0.12
0.1
0.08
0.06
0.04
0.02
0
Flow (mgd)
12:00 AM
4:00 AM
8:00 AM
12:00 PM
4:00 PM
8:00 PM
12:00 AM
Time (hr)
Model
Flow Monitoring Data

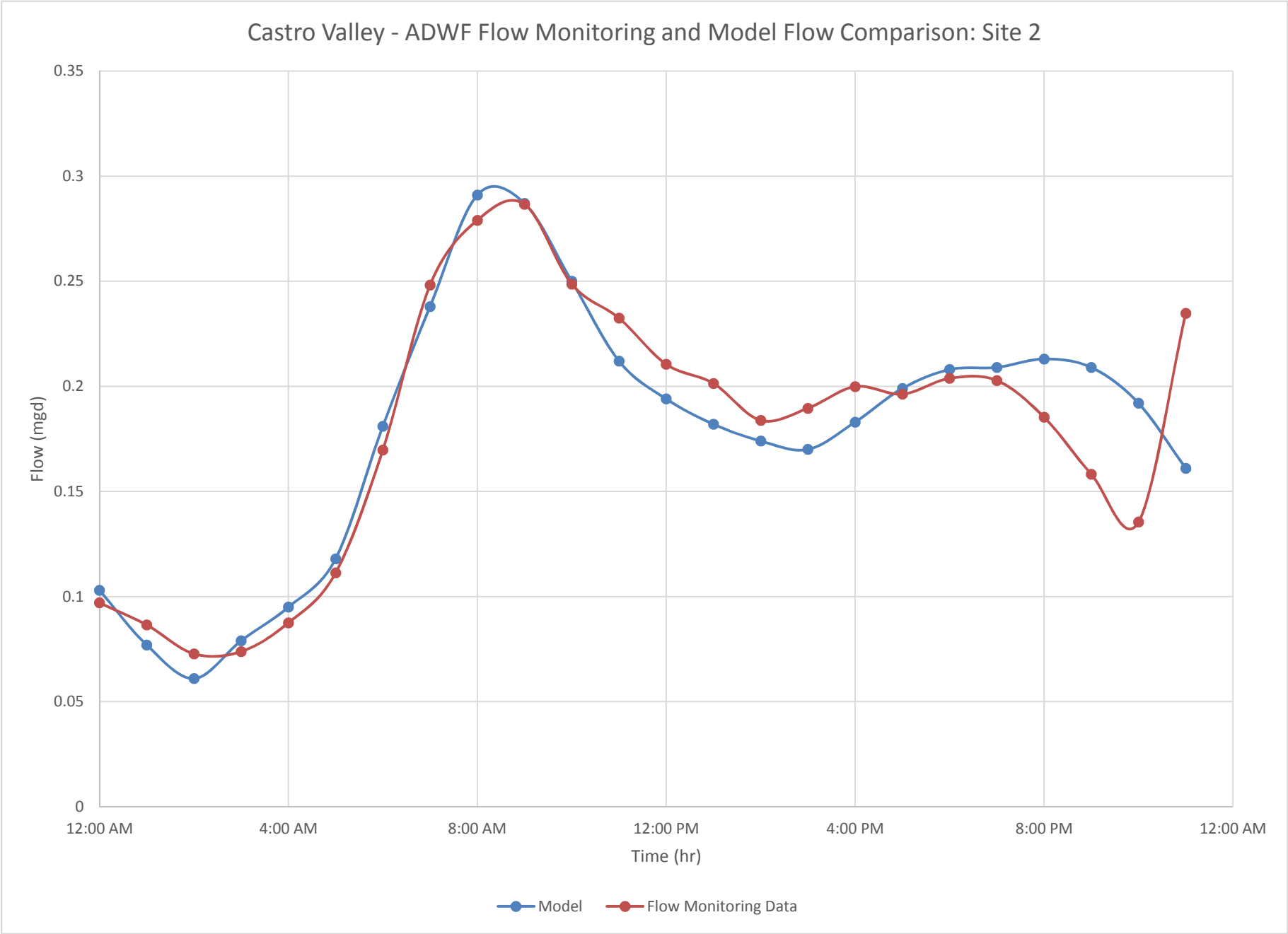
Castro Valley - ADWF Flow Monitoring and Model Flow Comparison: Site 2
0.35
0.3
0.25
0.2
0.15
0.1
0.05
0
Flow (mgd)
12:00 AM
4:00 AM
8:00 AM
12:00 PM
4:00 PM
8:00 PM
12:00 AM
Time (hr)
Model
Flow Monitoring Data

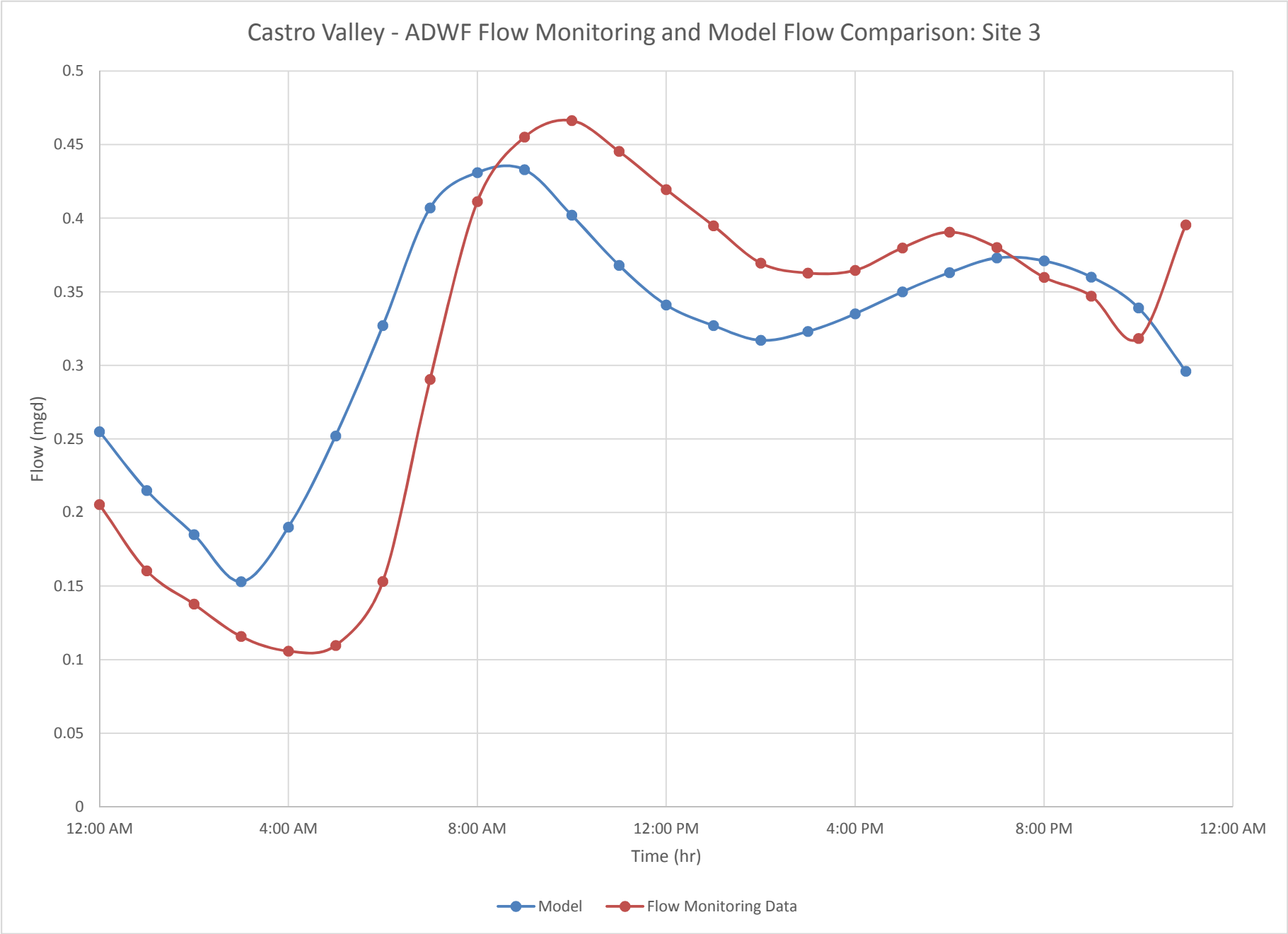
Castro Valley - ADWF Flow Monitoring and Model Flow Comparison: Site 3
Flow (mgd)
0.5
0.45
0.4
0.35
0.3
0.25
0.2
0.15
0.1
0.05
0
12:00 AM
4:00 AM
8:00 AM
12:00 PM
4:00 PM
8:00 PM
12:00 AM
Time (hr)
Model
Flow Monitoring Data

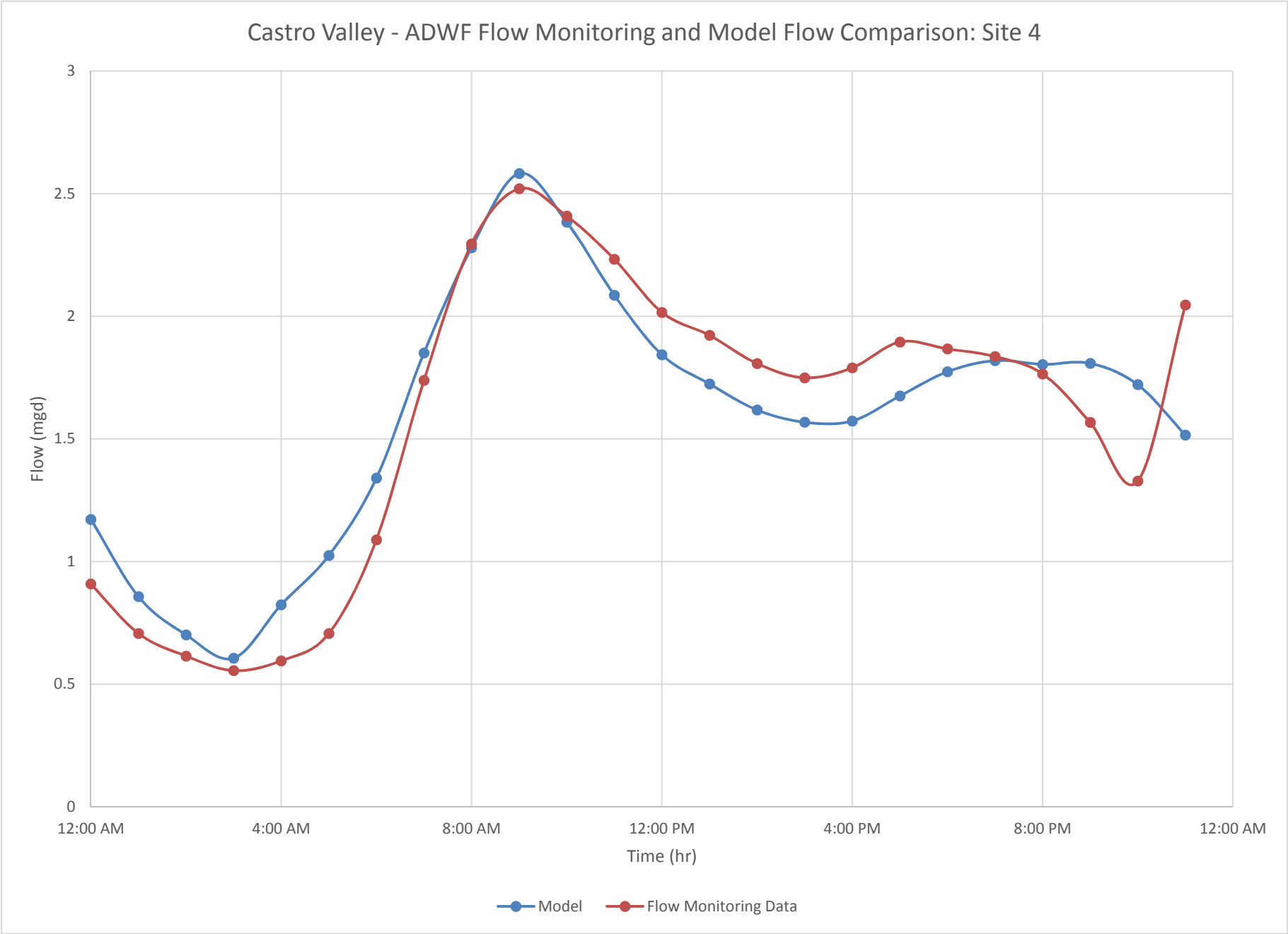
Castro Valley - ADWF Flow Monitoring and Model Flow Comparison: Site 4
Flow (mgd)
3
2.5
2
1.5
1
0.5
0
12:00 AM
4:00 AM
8:00 AM
12:00 PM
4:00 PM
8:00 PM
12:00 AM
Time (hr)
Model
Flow Monitoring Data

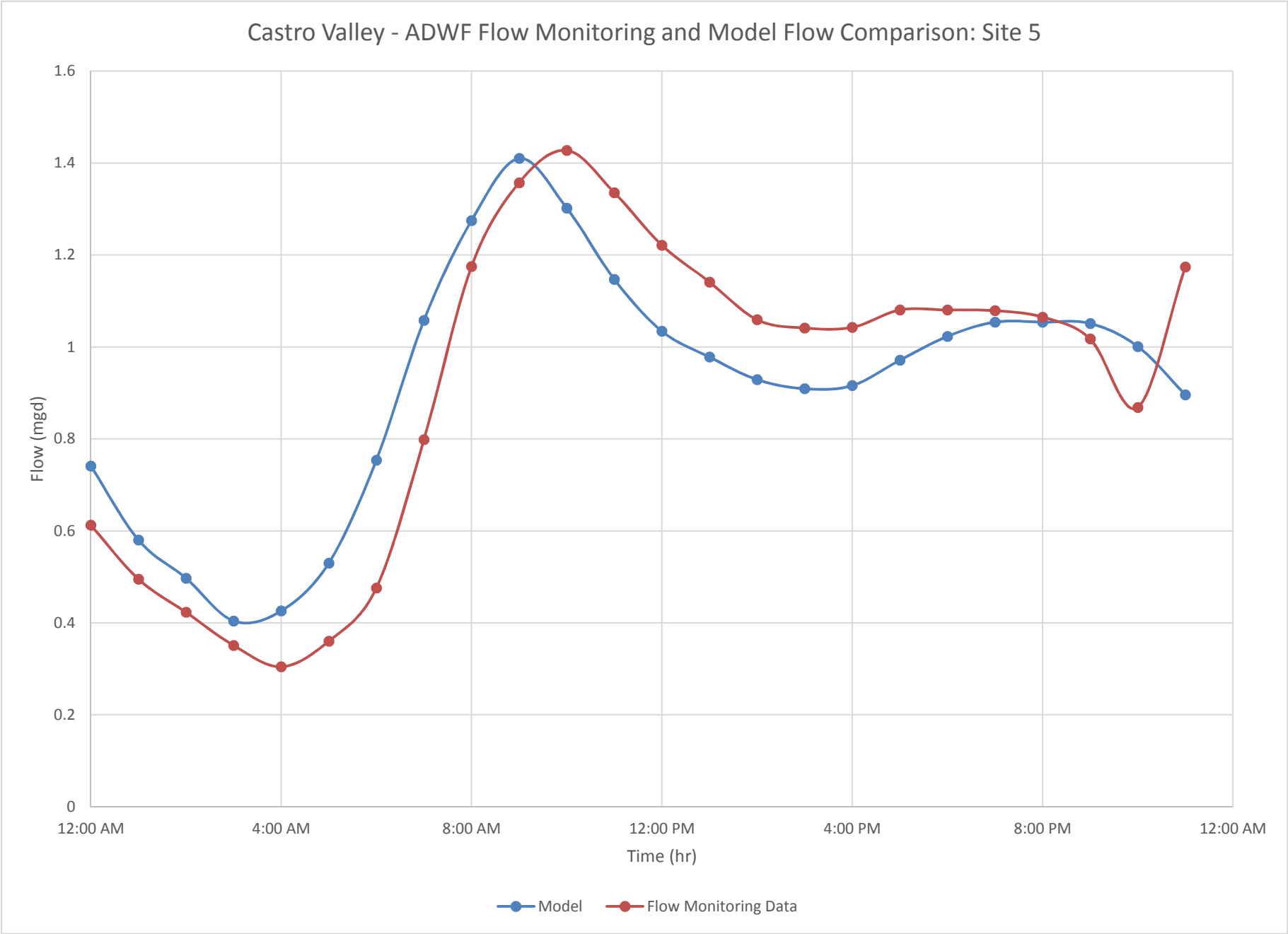
Castro Valley - ADWF Flow Monitoring and Model Flow Comparison: Site 5
1.6
1.4
1.2
1
0.8
0.6
0.4
0.2
0
Flow (mgd)
12:00 AM
4:00 AM
8:00 AM
12:00 PM
4:00 PM
8:00 PM
12:00 AM
Time (hr)
Model
Flow Monitoring Data

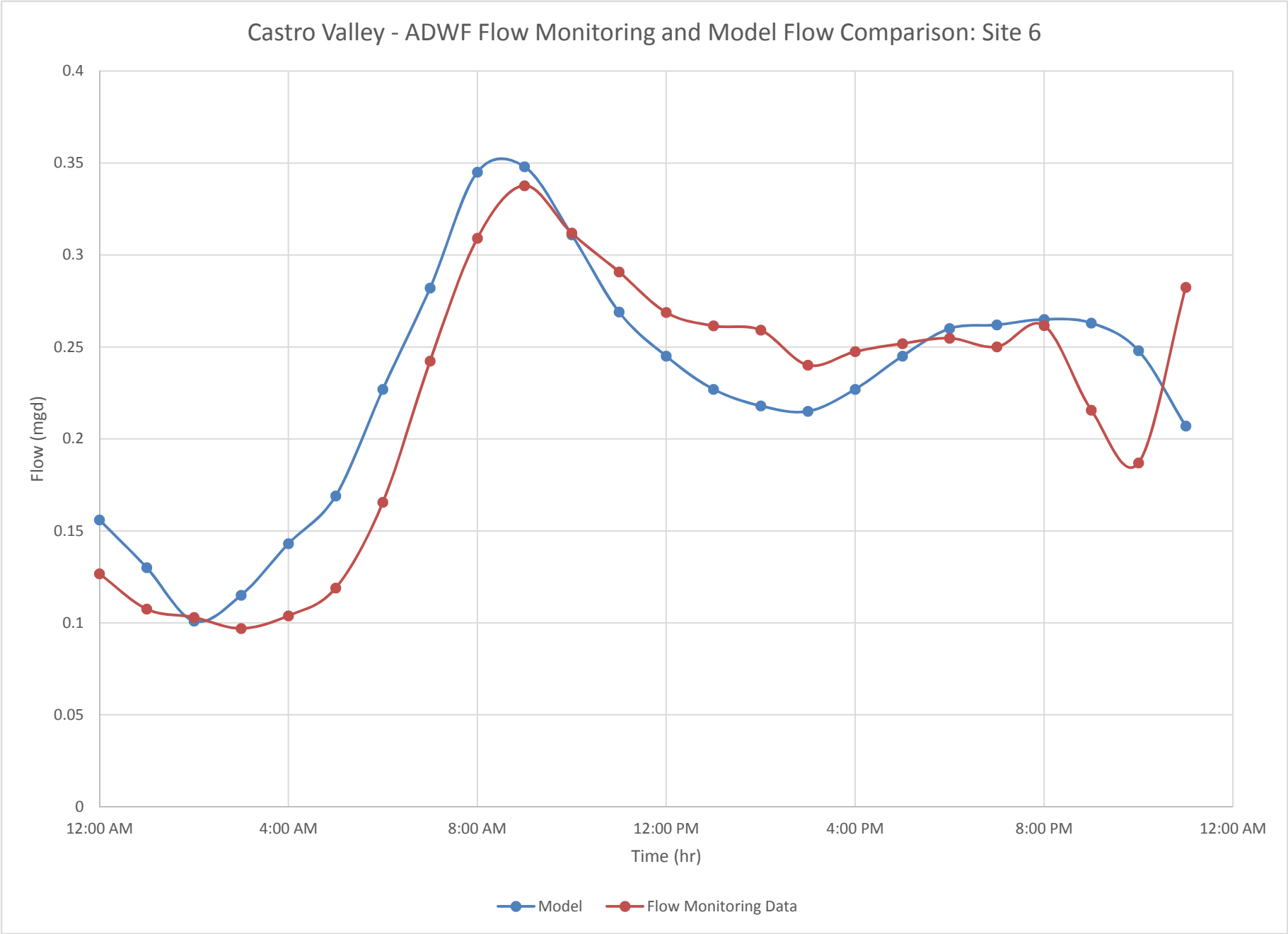
Castro Valley - ADWF Flow Monitoring and Model Flow Comparison: Site 6
0.4
0.35
0.3
0.25
0.2
0.15
0.1
0.05
0
Flow (mgd)
12:00 AM
4:00 AM
8:00 AM
12:00 PM
4:00 PM
8:00 PM
12:00 AM
Time (hr)
Model
Flow Monitoring Data

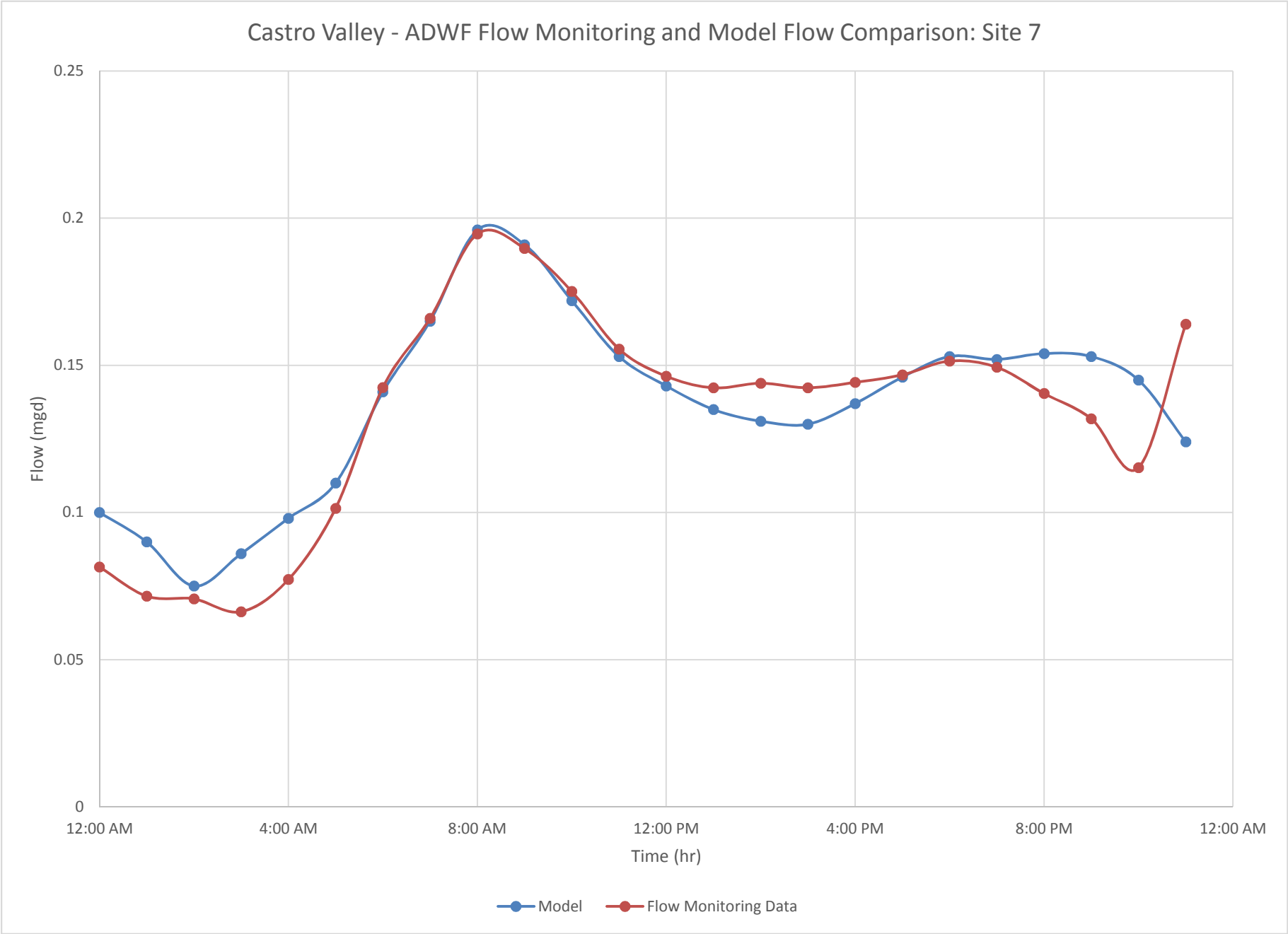
Castro Valley - ADWF Flow Monitoring and Model Flow Comparison: Site 7
0.25
0.2
0.15
0.1
0.05
0
Flow (mgd)
12:00 AM
4:00 AM
8:00 AM
12:00 PM
4:00 PM
8:00 PM
12:00 AM
Time (hr)
Model
Flow Monitoring Data

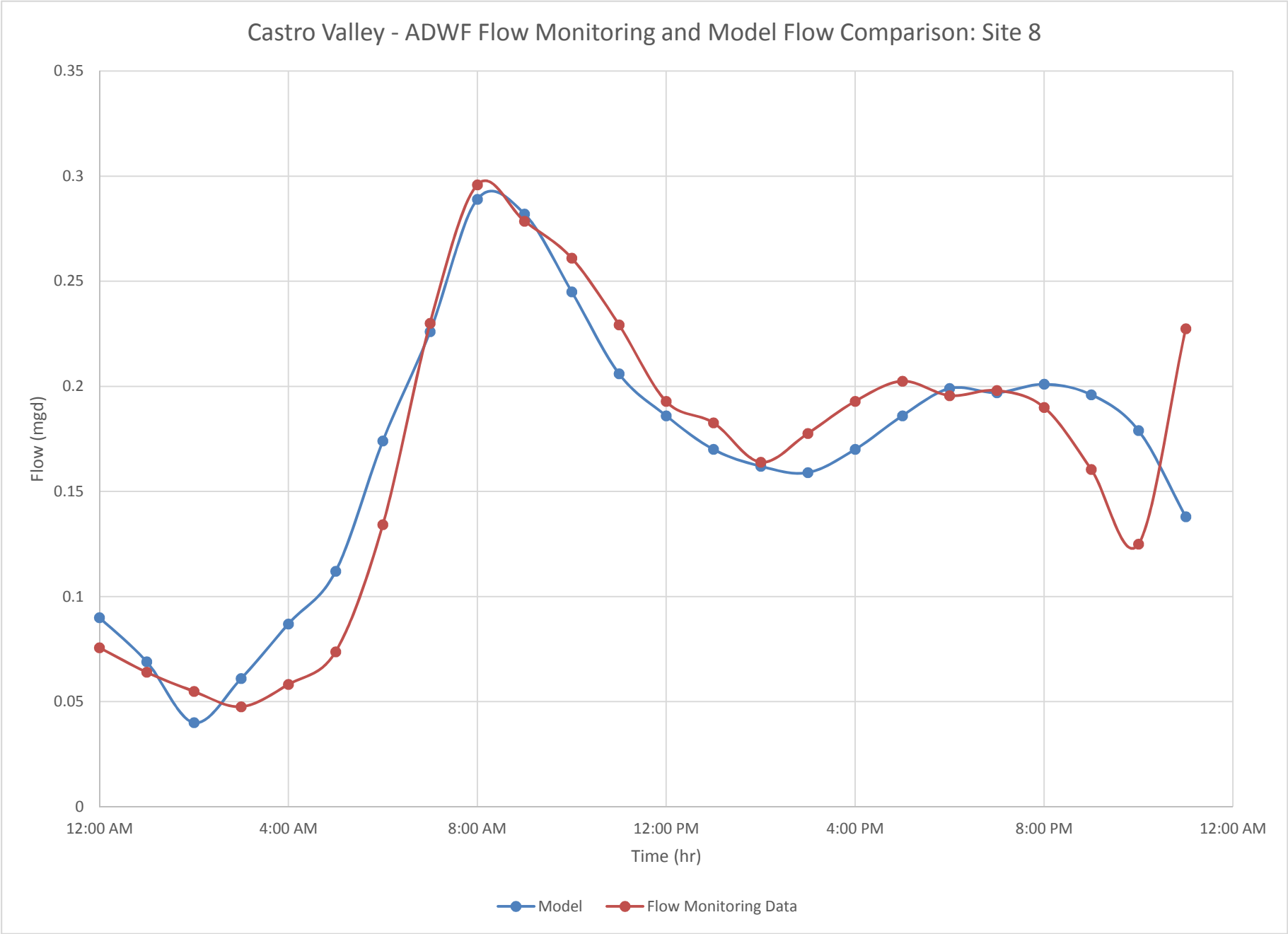
Castro Valley - ADWF Flow Monitoring and Model Flow Comparison: Site 8
0.35
0.3
0.25
0.2
0.15
0.1
0.05
0
Flow (mgd)
12:00 AM
4:00 AM
8:00 AM
12:00 PM
4:00 PM
8:00 PM
12:00 AM
Time (hr)
Model
Flow Monitoring Data

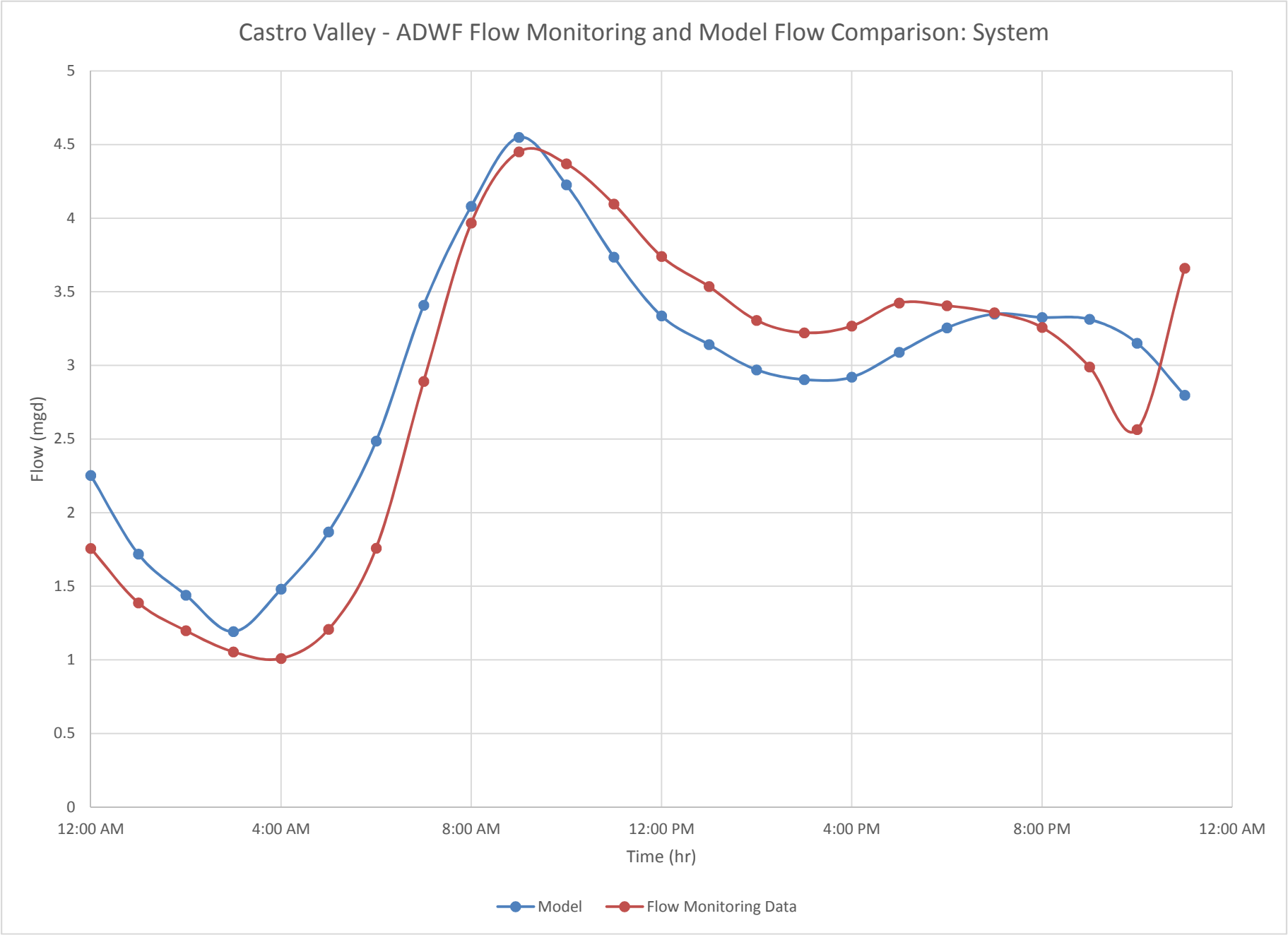
Castro Valley - ADWF Flow Monitoring and Model Flow Comparison: System
Flow (mgd)
5
4.5
4
3.5
3
2.5
2
1.5
1
0.5
0
12:00 AM
4:00 AM
8:00 AM
12:00 PM
4:00 PM
8:00 PM
12:00 AM
Time (hr)
Model
Flow Monitoring Data

APPENDIX C

Wet Weather Calibration Plots

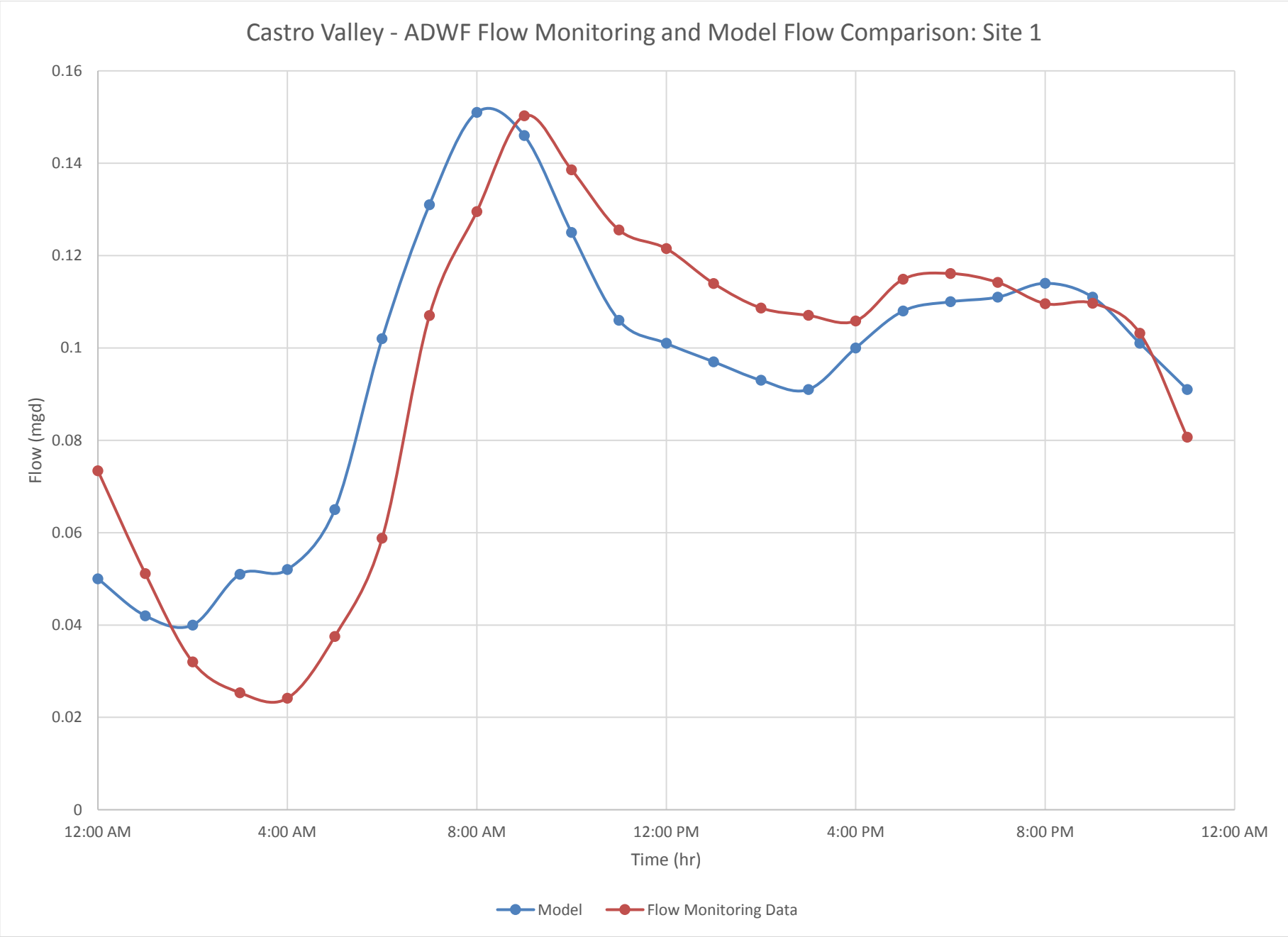
Castro Valley - ADWF Flow Monitoring and Model Flow Comparison: Site 1
0.16
0.14
0.12
0.1
0.08
0.06
0.04
0.02
0
Flow (mgd)
12:00 AM
4:00 AM
8:00 AM
12:00 PM
4:00 PM
8:00 PM
12:00 AM
Time (hr)
Model
Flow Monitoring Data

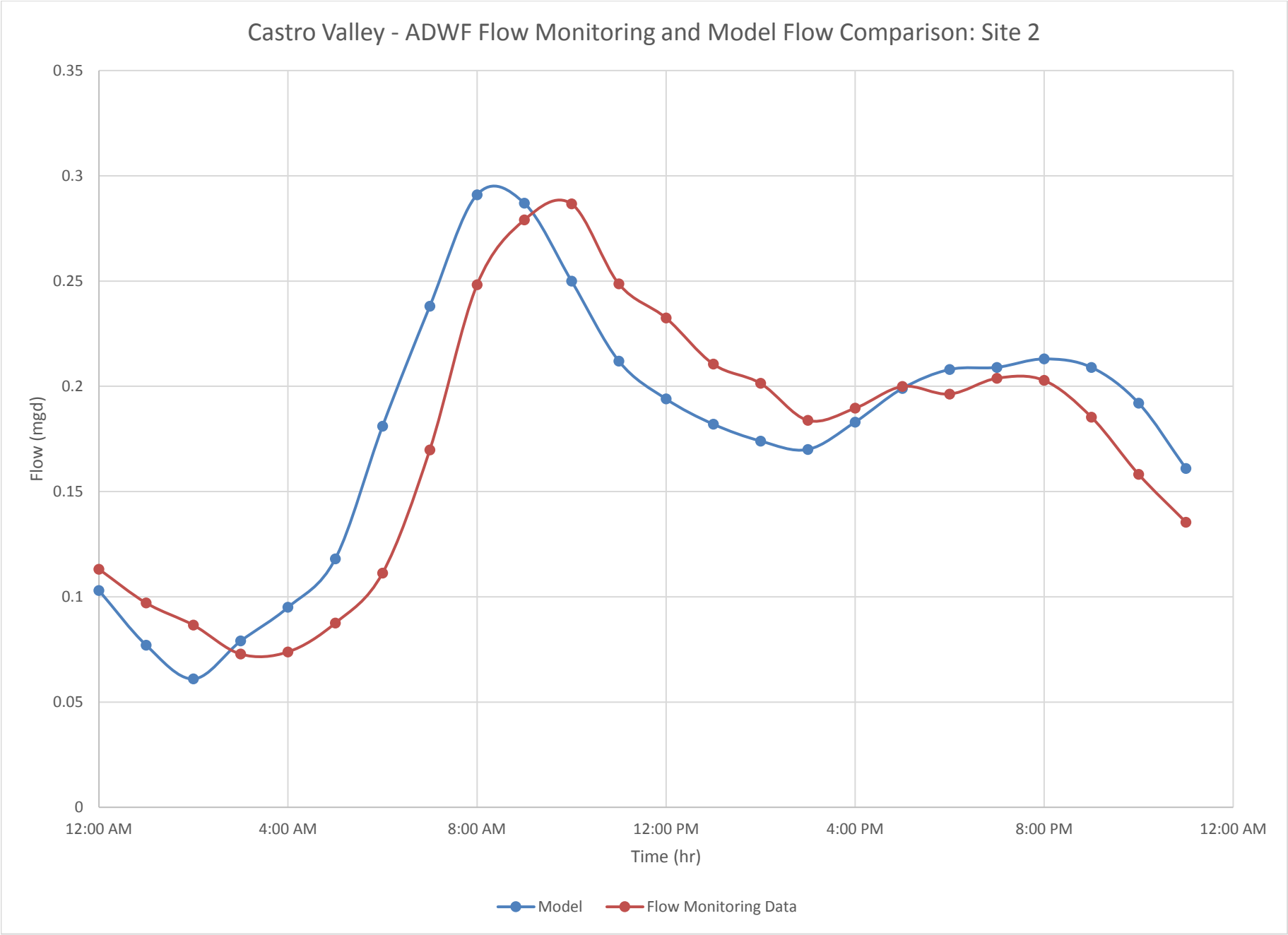
Castro Valley - ADWF Flow Monitoring and Model Flow Comparison: Site 2
0.35
0.3
0.25
0.2
0.15
0.1
0.05
0
Flow (mgd)
12:00 AM
4:00 AM
8:00 AM
12:00 PM
4:00 PM
8:00 PM
12:00 AM
Time (hr)
Model
Flow Monitoring Data

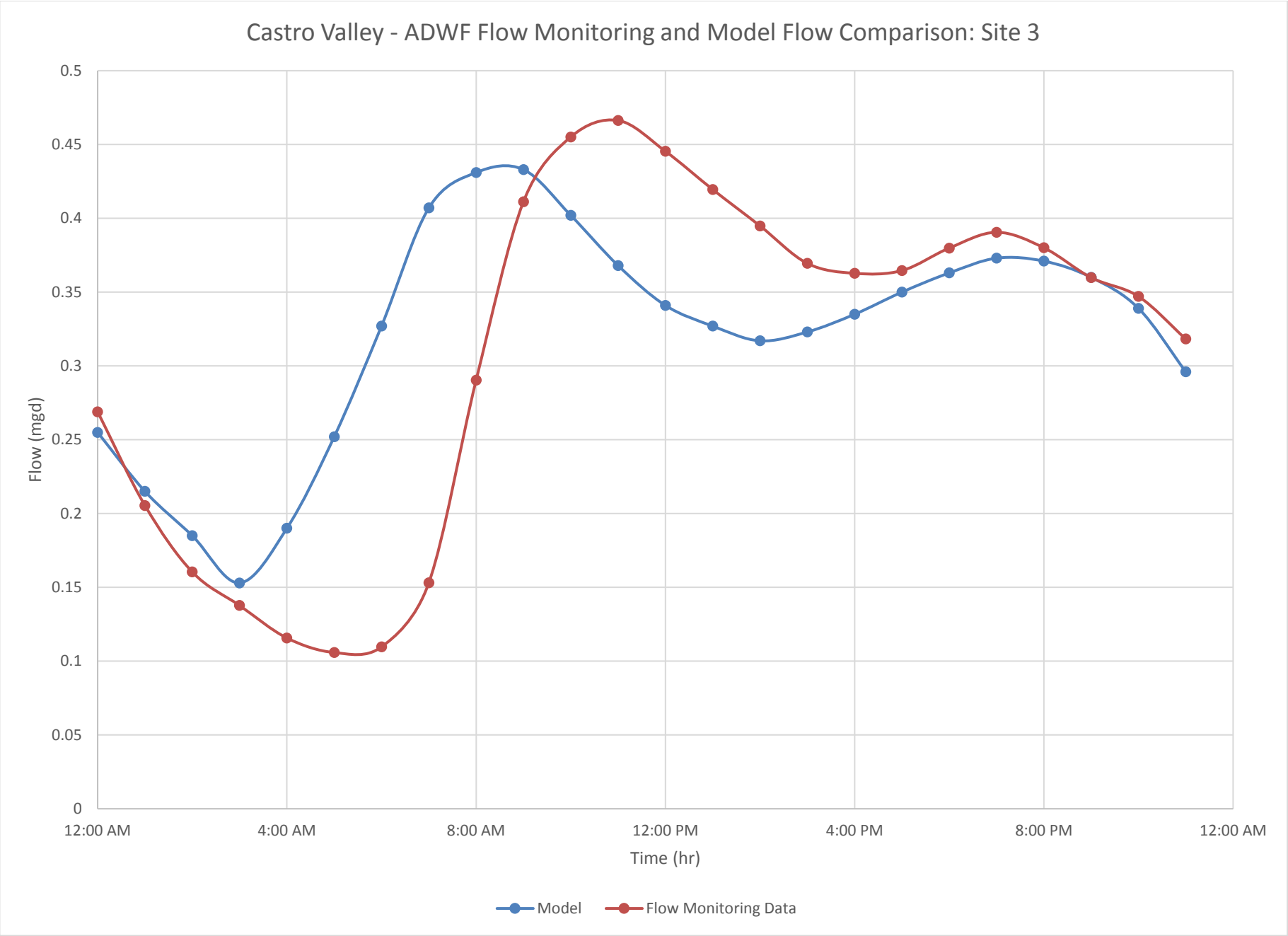
Castro Valley - ADWF Flow Monitoring and Model Flow Comparison: Site 3
0.5
0.45
0.4
0.35
0.3
0.25
0.2
0.15
0.1
0.05
0
Flow (mgd)
12:00 AM
4:00 AM
8:00 AM
12:00 PM
4:00 PM
8:00 PM
12:00 AM
Time (hr)
Model
Flow Monitoring Data

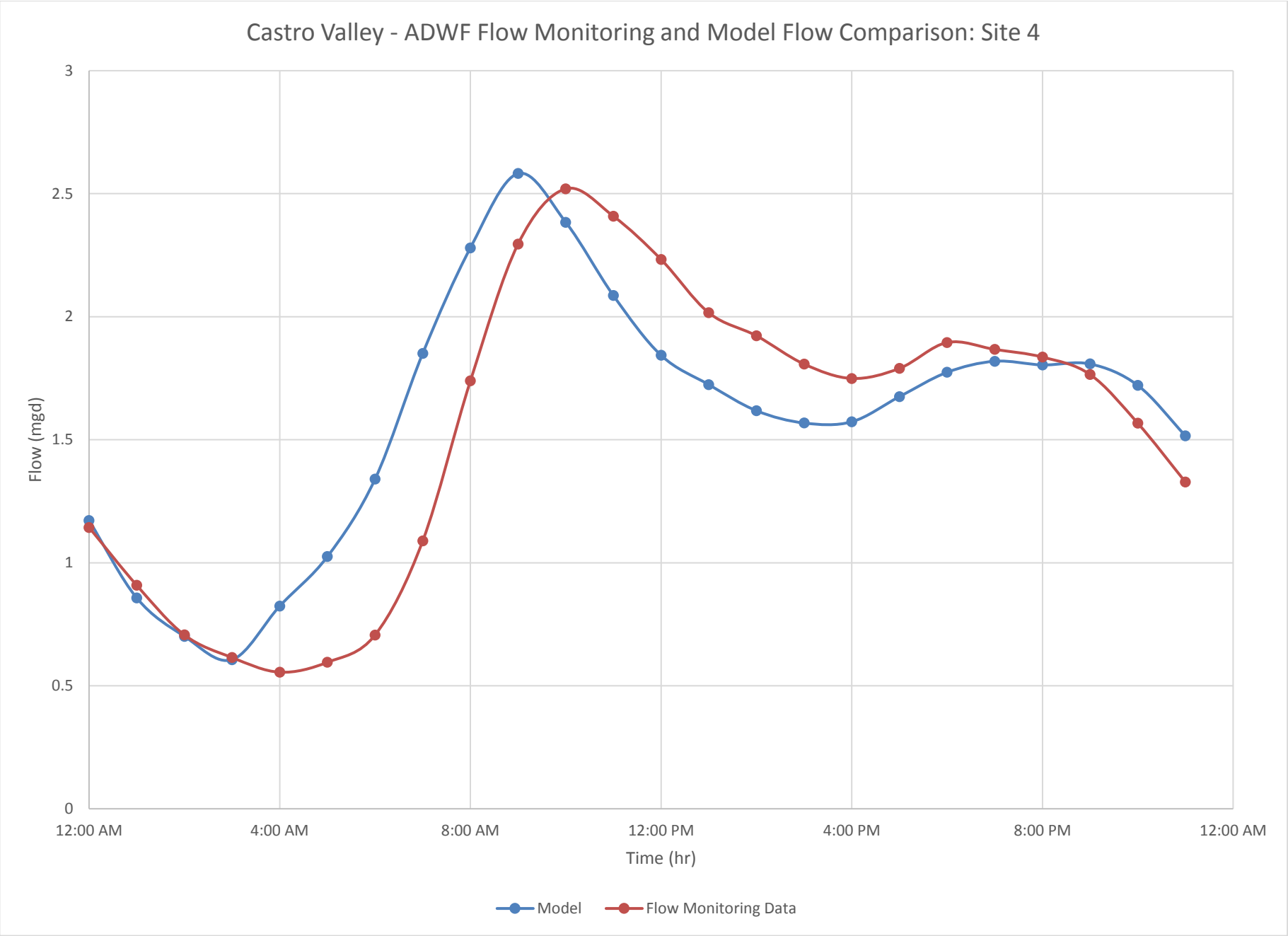
Castro Valley - ADWF Flow Monitoring and Model Flow Comparison: Site 4
Flow (mgd)
3
2.5
2
1.5
1
0.5
0
12:00 AM
4:00 AM
8:00 AM
12:00 PM
4:00 PM
8:00 PM
12:00 AM
Time (hr)
Model
Flow Monitoring Data

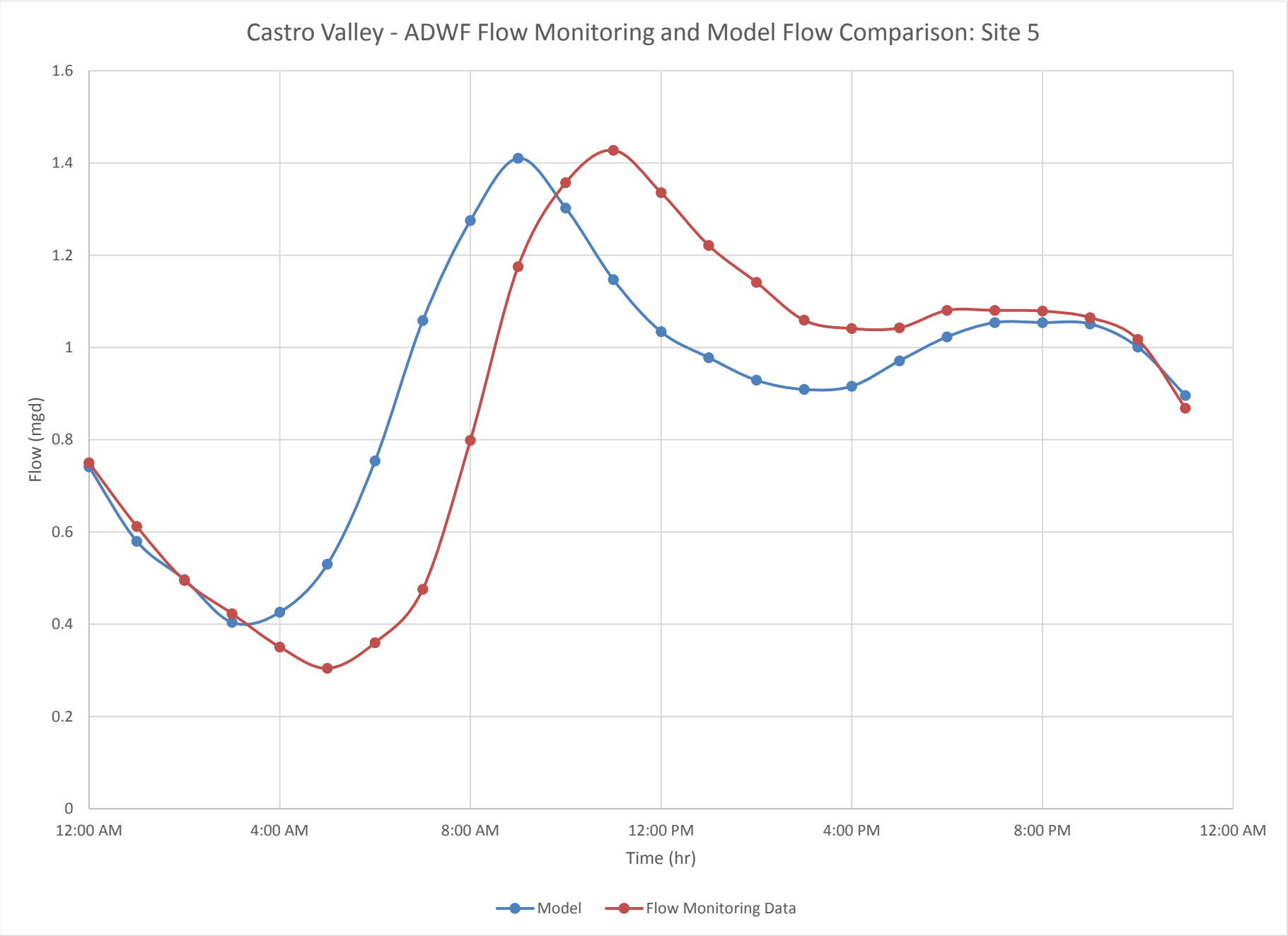
Castro Valley - ADWF Flow Monitoring and Model Flow Comparison: Site 5
1.6
1.4
1.2
1
0.8
0.6
0.4
0.2
0
Flow (mgd)
12:00 AM
4:00 AM
8:00 AM
12:00 PM
4:00 PM
8:00 PM
12:00 AM
Time (hr)
Model
Flow Monitoring Data

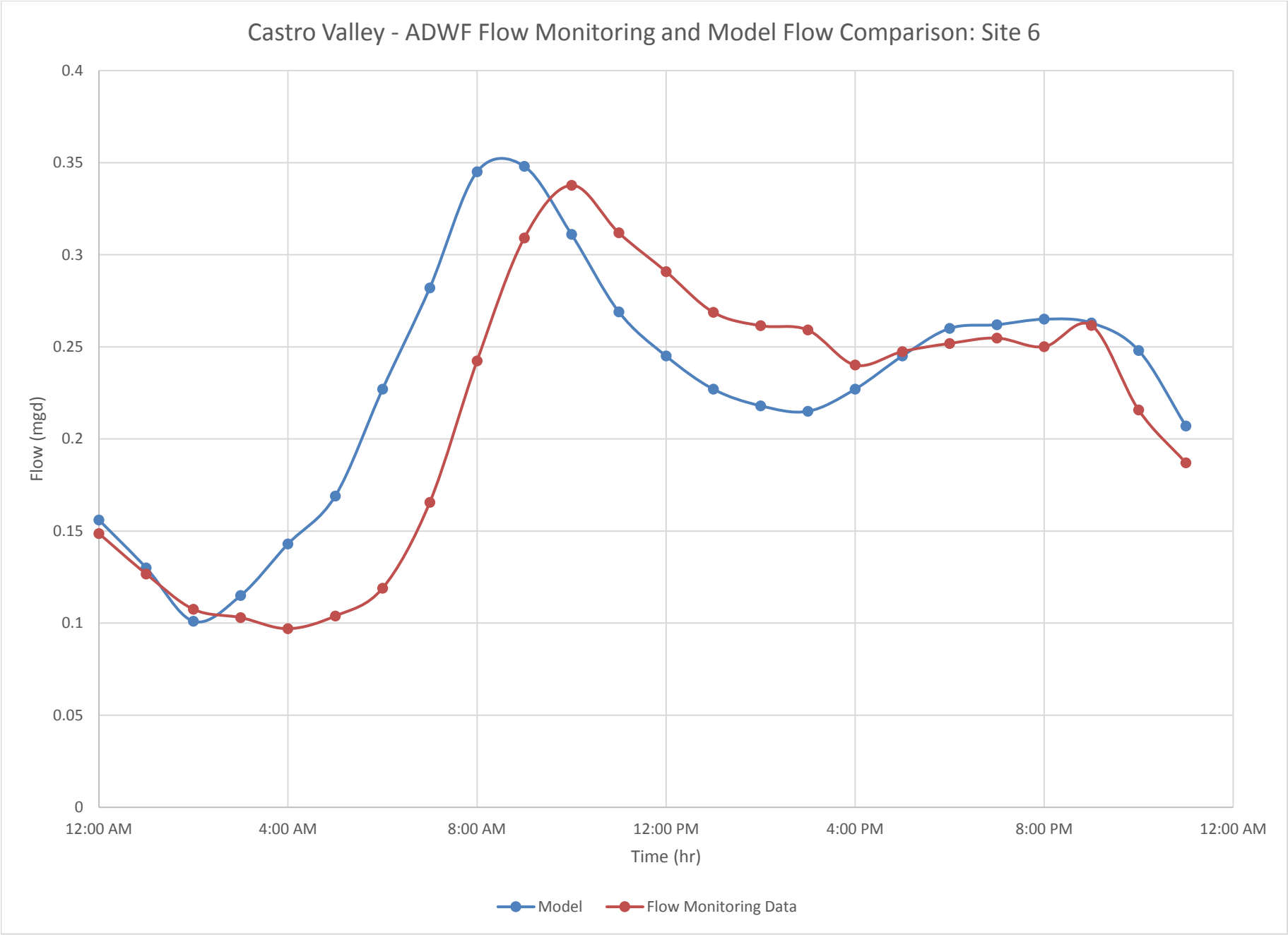
Castro Valley - ADWF Flow Monitoring and Model Flow Comparison: Site 6
0.4
0.35
0.3
0.25
0.2
0.15
0.1
0.05
0
Flow (mgd)
12:00 AM
4:00 AM
8:00 AM
12:00 PM
4:00 PM
8:00 PM
12:00 AM
Time (hr)
Model
Flow Monitoring Data

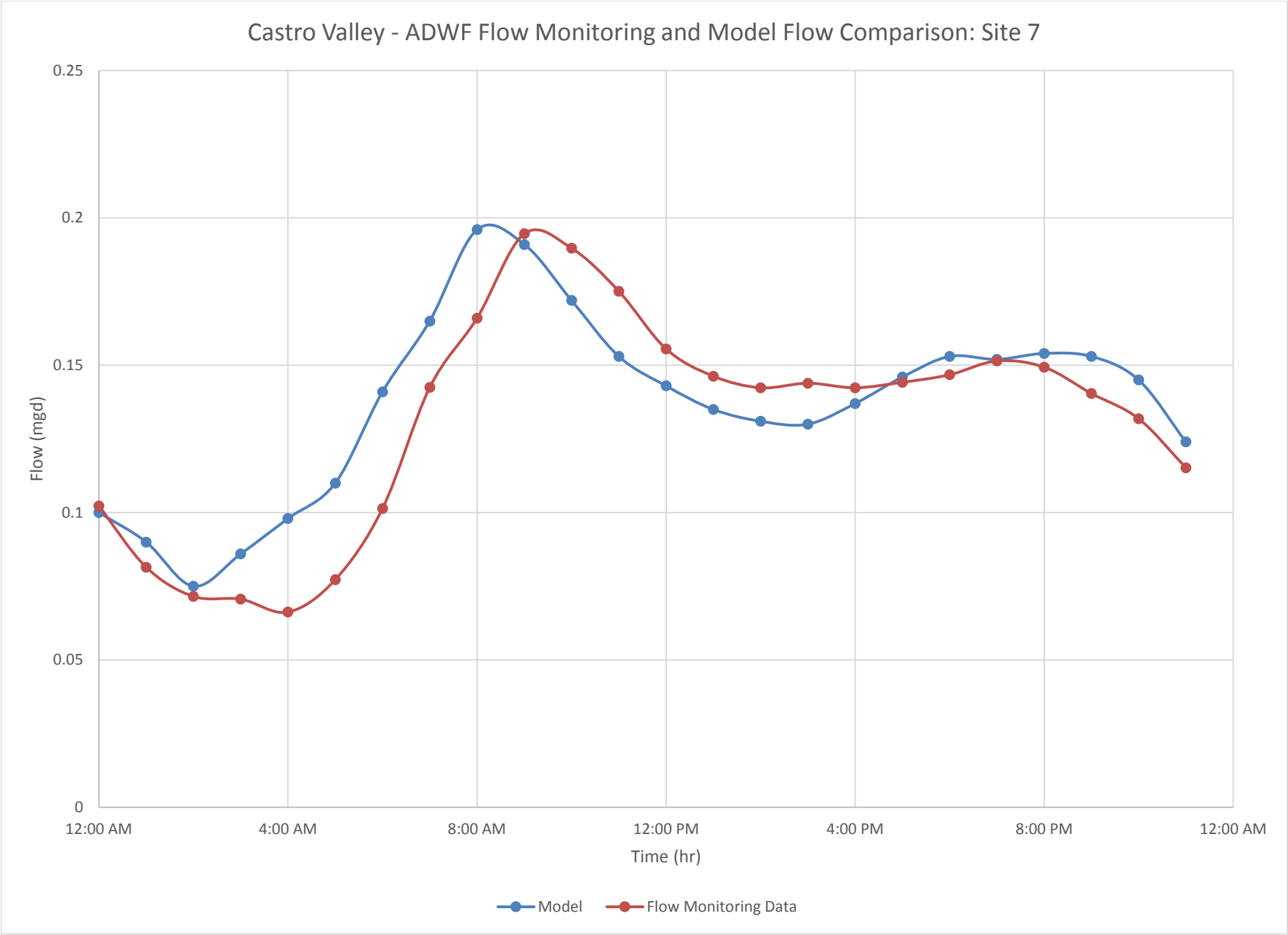
Castro Valley - ADWF Flow Monitoring and Model Flow Comparison: Site 7
0.25
0.2
0.15
0.1
0.05
0
Flow (mgd)
12:00 AM
4:00 AM
8:00 AM
12:00 PM
4:00 PM
8:00 PM
12:00 AM
Time (hr)
Model
Flow Monitoring Data

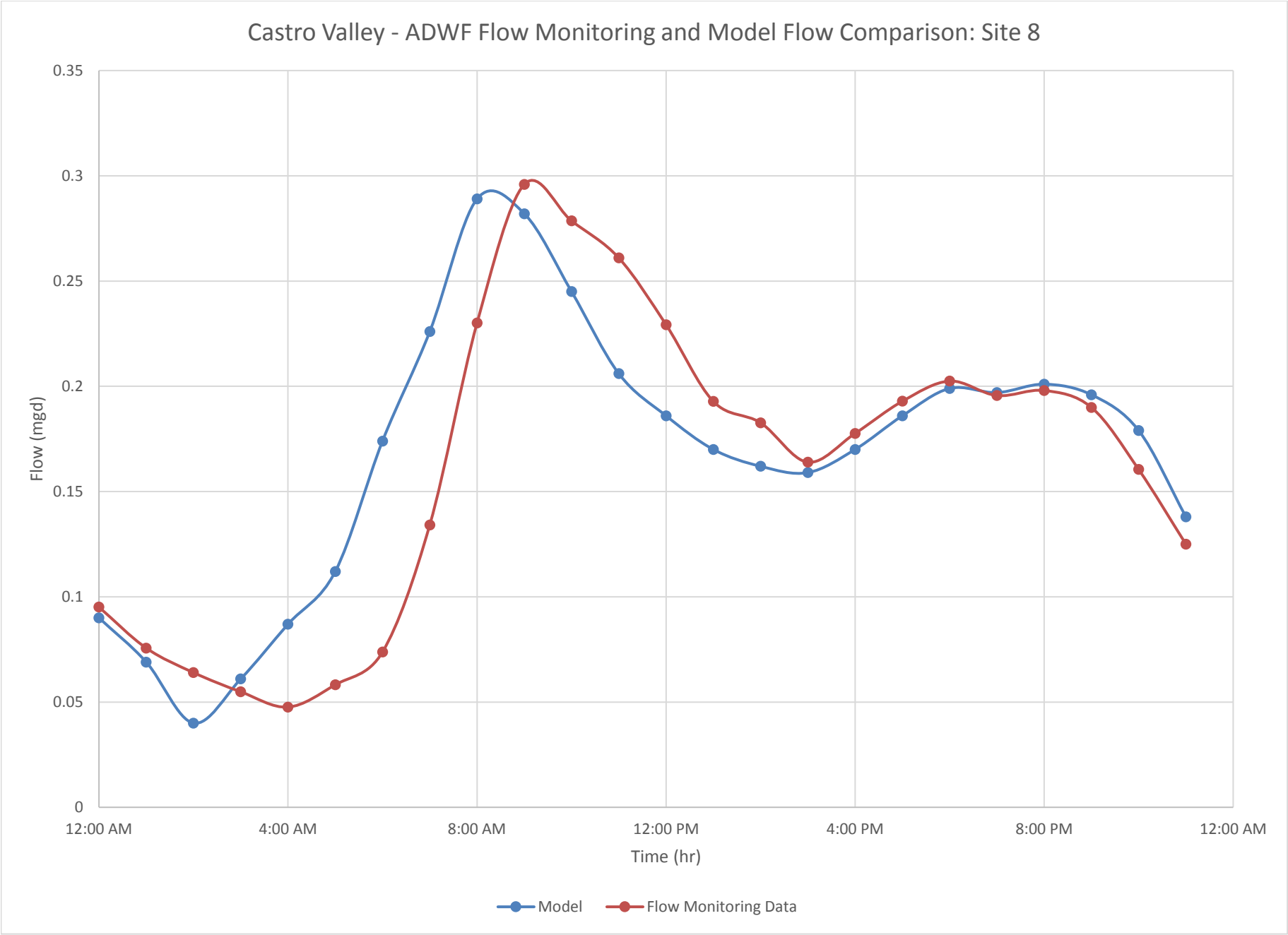
Castro Valley - ADWF Flow Monitoring and Model Flow Comparison: Site 8
0.35
0.3
0.25
0.2
0.15
0.1
0.05
0
Flow (mgd)
12:00 AM
4:00 AM
8:00 AM
12:00 PM
4:00 PM
8:00 PM
12:00 AM
Time (hr)
Model
Flow Monitoring Data

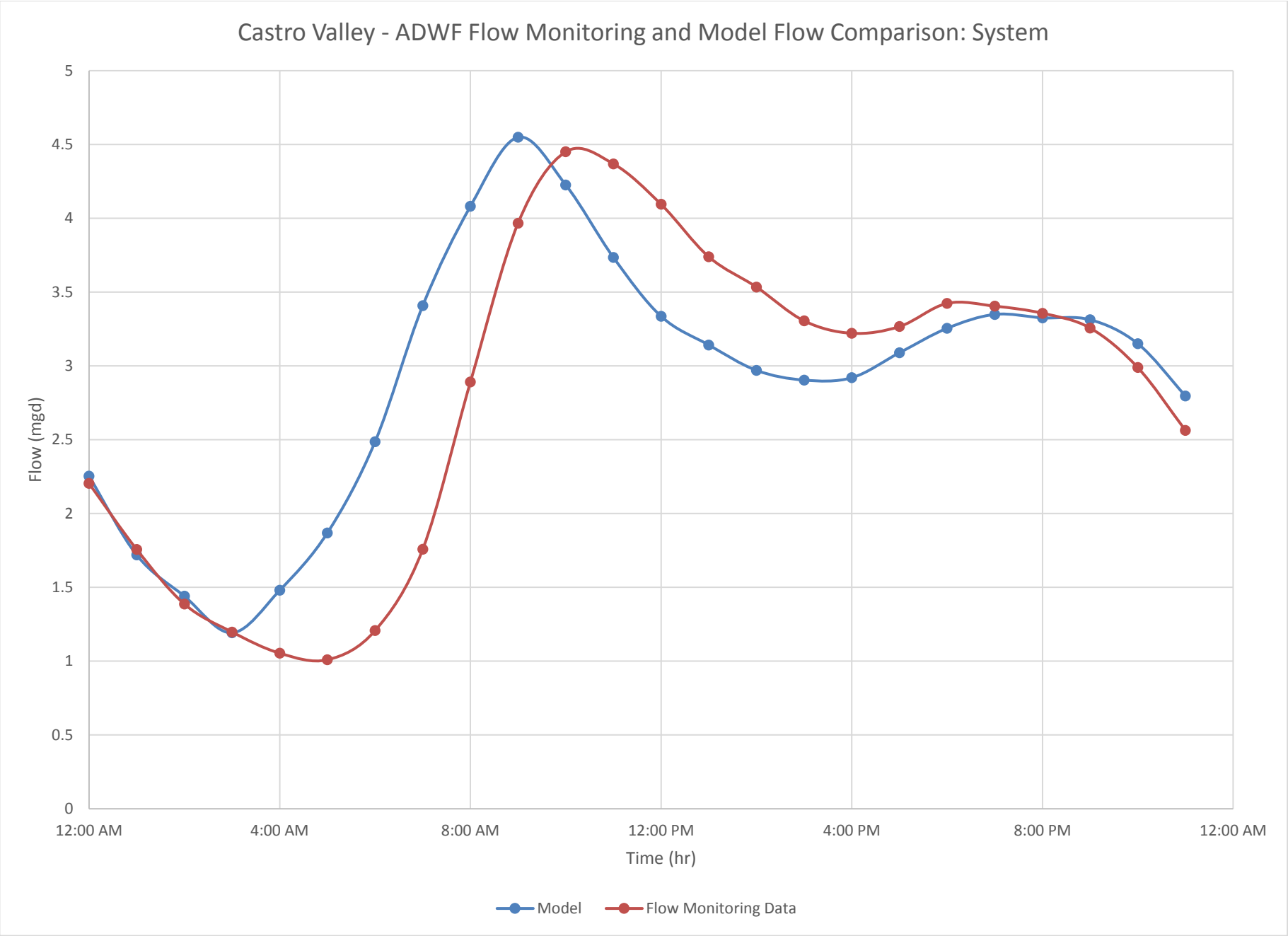
Castro Valley - ADWF Flow Monitoring and Model Flow Comparison: System
Flow (mgd)
5
4.5
4
3.5
3
2.5
2
1.5
1
0.5
0
12:00 AM
4:00 AM
8:00 AM
12:00 PM
4:00 PM
8:00 PM
12:00 AM
Time (hr)
Model
Flow Monitoring Data

APPENDIX D

Capital Improvement Project Sheets

PROJECT: Redwood Road Trunk Sewer

Priority/Fiscal Year: Priority A: FY 2016/17

Risk Level: High Risk

Project Purpose: Upsize gravity sewer to accommodate PWWF and relieve wet weather surcharging on Redwood Road and points upstream

Project Location: Redwood Road between Seven Hills Road and Heyer Avenue

Existing Conditions:

- 6-inch and 8-inch VCP
- Existing capacity = 0.93 mgd
- 2006 ADWF: 0.23 mgd
- 2015 ADWF: 0.20 mgd

Design PWWF: 1.73 mgd (10-year, 24-hour design storm)

Model Reference: MH 27-66 to MH 19-110

Recommendations:

- Upsize 1,058 LF of sanitary sewer to 10-inch VCP by open-cut replacement
- Upsize 675 LF of sanitary sewer to 12-inch VCP by open-cut replacement

Estimated Project Costs

Item	Unit	$/Unit	Quantity	Total
10-inch Remove & Replace	LF	$270	1,058	$286,000
12-inch Remove & Replace	LF	$324	675	$219,000
Project Subtotal				***$505,000***
30% Contingency				$152,000
Construction Cost Subtotal				***$657,000***
Engineering, Legal, Admin., etc. @ 30%				$198,000
Total Capital Cost				**$855,000**

PROJECT LOCATION MAP

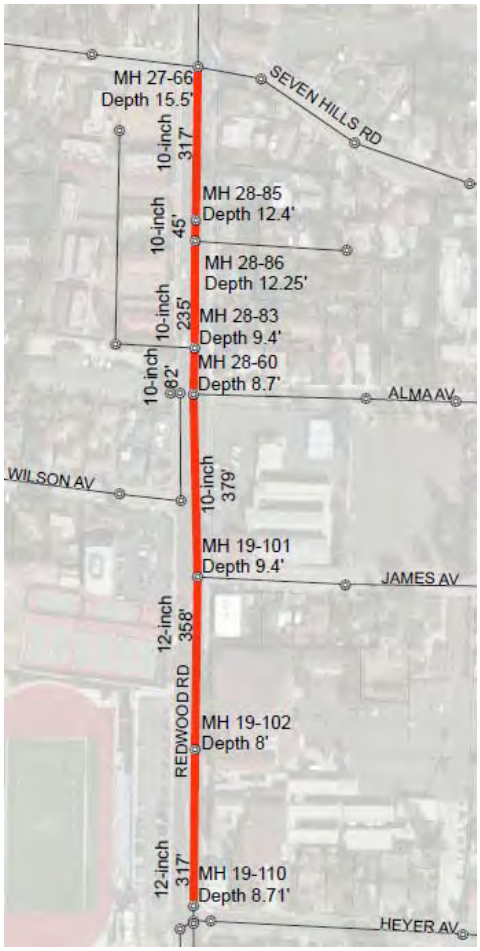

PROJECT PHOTO

Redwood Road at Heyer Avenue looking North

PROJECT TRIGGERS

EXISTING CAPACITY DEFICIENCY:

Pipe is currently undersized for PWWF conditions, and overflows at multiple locations during wet weather.

CVSan

WASTEWATER COLLECTION SYSTEM MASTER PLAN UPDATE

REDWOOD ROAD TRUNK SEWER PROJECT SHEET

WEST YOST ASSOCIATES

PROJECT: Marshall Street Trunk Sewer

Priority/Fiscal Year: Priority B: FY 2017/18

Risk Level: High Risk

Project Purpose: Upsize gravity sewer to accommodate PWWF and relieve wet weather surcharging on Marshall Street and points upstream

Project Location: Marshall Street between Normandy Court and Greenacre Road

Existing Conditions:
- 10-inch VCP
- Existing capacity = 1.05 mgd
- 2006 ADWF: 0.19 mgd
- 2015 ADWF: 0.17 mgd

Model Reference: MH 30-18 to MH 30-40

Design PWWF: 1.67 mgd (10-year, 24-hour design storm)

Recommendations:
- Upsize 1328 LF of sanitary sewer to 12-inch VCP by open-cut replacement

Estimated Project Costs				
Item	Unit	$/Unit	Quantity	Total
12-inch Remove & Replace	LF	324	1,328 LF	$430,000
Project Subtotal				***$430,000***
30% Contingency				$129,000
Construction Cost Subtotal				***$559,000***
Engineering, Legal, Admin., etc. @ 30%				$168,000
Total Capital Cost				**$727,000**

PROJECT LOCATION MAP

PROJECT PHOTOS

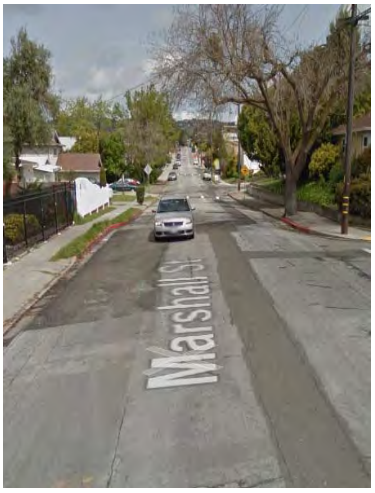

Marshal Street at Greenacre Road looking North

PROJECT TRIGGERS

EXISTING CAPACITY DEFICIENCY:

Pipe is currently undersized for existing PWWF conditions, and surcharges more than two feet at multiple locations during wet weather.

CVSan

WASTEWATER COLLECTION SYSTEM MASTER PLAN UPDATE

MARSHAL STREET TRUNK SEWER PROJECT SHEET

WEST YOST ASSOCIATES

PROJECT: Sandy Road Trunk Sewer

Priority/Fiscal Year: Priority B: FY 2017/18

Risk Level: Medium Risk

Project Purpose: Upsize gravity sewer to accommodate PWWF and relieve wet weather surcharging on Sandy Road and points upstream

Project Location: Sandy Road south of Seven Hills Road

Existing Conditions:
- 8-inch VCP
- Existing capacity = 0.88 mgd
- 2006 ADWF: 0.14 mgd
- 2015 ADWF: 0.17 mgd

Model Reference: MH 28-9 to MH 28-94

Ultimate PWWF: 1.50 mgd (10-year, 24-hour design storm)

Recommendations:
- Upsize 848 LF of sanitary sewer to 10-inch VCP by open-cut replacement

Estimated Project Costs				
Item	Unit	$/Unit	Quantity	Total
10-inch Remove & Replace	LF	180	848 LF	$153,000
Project Subtotal				***$153,000***
30% Contingency				$46,000
Construction Cost Subtotal				***$199,000***
Engineering, Legal, Admin., etc. @ 30%				$60,000
Total Capital Cost				**$259,000**

PROJECT LOCATION MAP

PROJECT PHOTO

Sandy Road at Seven Hills Road looking South

PROJECT TRIGGERS

EXISTING CAPACITY DEFICIENCY:

Pipe is currently undersized for existing PWWF conditions, and surcharges more than 2 feet at multiple locations during wet weather.

CVSan

WASTEWATER COLLECTION SYSTEM MASTER PLAN UPDATE

SANDY ROAD TRUNK SEWER PROJECT SHEET

WEST YOST ASSOCIATES

PROJECT: Aspen and Pine Trunk Sewer

Priority/Fiscal Year: Priority B: FY 2017/18

Risk Level: Medium Risk

Project Purpose: Upsize gravity sewer to accommodate PWWF and relieve wet weather surcharging

Project Location: Aspen Avenue and Pine Street between Castro Valley Boulevard and Elm Street

Existing Conditions:

- 10-inch, 12-inch and 15-inch VCP
- Existing capacity = 1.17 mgd
- 2006 ADWF: 0.79 mgd
- 2015 ADWF: 0.70 mgd

Design PWWF: 2.51 mgd (10-year, 24-hour design storm)

Model Reference: MH 30-46 to MH 31-4

Recommendations:

- Upsize 809 LF of sanitary sewer to 18-inch VCP by open-cut replacement
- Upsize 626 LF of sanitary sewer to 21-inch VCP by open-cut replacement

Estimated Project Costs				
Item	Unit	$/Unit	Quantity	Total
18-inch Remove & Replace	LF	$486	809 LF	$393,000
21-inch Remove & Replace	LF	$567	626 LF	$355,000
Project Subtotal				***$748,000***
30% Contingency				$224,000
Construction Cost Subtotal				***$972,000***
Engineering, Legal, Admin., etc. @ 30%				$292,000
Total Capital Cost				**$1,264,000**

PROJECT PHOTO

Intersection of Aspen Avenue and Pine Street looking West along Pine Street

PROJECT TRIGGERS

EXISTING CAPACITY DEFICIENCY:

Trunk sewers are currently undersized for existing PWWF conditions and surcharges more than two feet at multiple locations during wet weather.

PROJECT LOCATION MAP

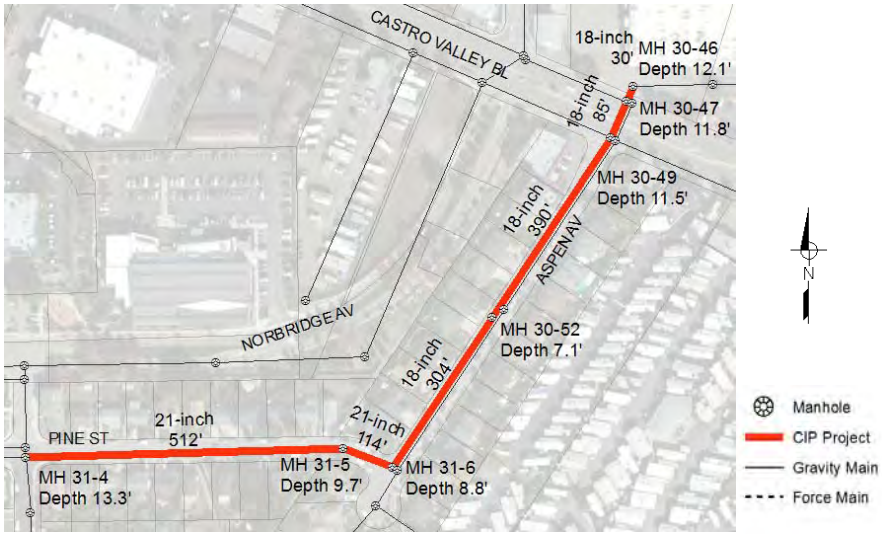

WASTEWATER COLLECTION SYSTEM MASTER PLAN UPDATE

ASPEN AND PINE TRUNK SEWER PROJECT SHEET

WEST YOST ASSOCIATES

PROJECT: South of I-580 Relief Sewer

Priority/Fiscal Year: Priority C: FY 2018/19

Risk Level: High Risk

Project Purpose: New relief sewer to relieve surcharging in Orange Avenue and several locations along the proposed parallel relief sewer alignment

Project Location: South of Interstate-580 from Redwood Road to North Third Street

Existing Conditions: Inadequate capacity in multiple trunk sewers

Design PWWF: 4.17 mgd (10-year, 24-hour design storm)

Model Reference: MH 30-18 to MH 30-40

Recommendations:

- Construct 3,874 LF of 21-inch VCP and 1,110 LF of 24-inch VCP by open-cut

Estimated Project Costs

Item	Unit	$/Unit	Quantity	Total
21-inch New Pipeline	LF	$567	3,874	$2,197,000
24-inch New Pipeline	LF	$648	1,110	$719,000
Creek Crossing Cost	LF	$600	600	$360,000
Project Subtotal				***$3,276,000***
30% Contingency				$983,000
Construction Cost Subtotal				***$4,259,000***
Engineering, Legal, Admin., etc. @ 30%				$198,000
Total Capital Cost				**$4,457,000**

PROJECT LOCATION MAP

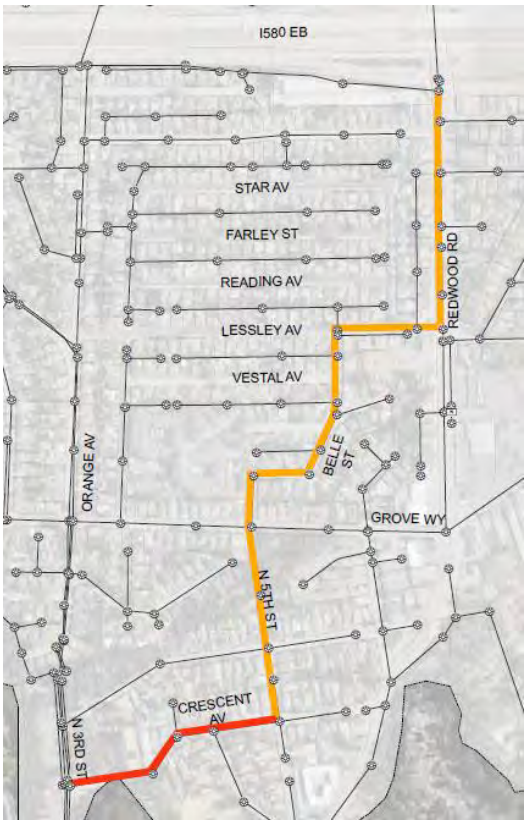

Manhole
Gravity Main
Force Main
CIP Project
21- inch
24- inch

PROJECT PHOTO

Redwood Road looking south from the I-580 undercrossing

PROJECT TRIGGERS

EXISTING CAPACITY DEFICIENCY:

Existing mains are currently undersized for PWWF conditions, and surcharge at multiple locations during wet weather

CVSan

WASTEWATER COLLECTION SYSTEM MASTER PLAN UPDATE

SOUTH OF I-580 RELIEF SEWER PROJECT SHEET

WEST YOST ASSOCIATES

PROJECT: Aspen and Pine Trunk Sewer

Priority/Fiscal Year: Priority B: FY 2017/18

Risk Level: Medium Risk

Project Purpose: Direct flows from Marshall Street onto Vincent Court to accommodate PWWF and relieve wet weather surcharging on Aspen Avenue and Pine Street

Project Location: Vincent Court between Marshall Street and Forest Avenue

Existing Conditions: On Aspen & Pine:

- 10-inch, 12-inch and 15-inch VCP
- Existing capacity = 1.17 mgd
- 2006 ADWF: 0.79 mgd
- 2015 ADWF: 0.70 mgd

Design PWWF: 2.51 mgd (10-year, 24-hour design storm)

Model Reference: On Aspen & Pine from MH 30-46 to MH 31-4

Recommendations:

- Upsize 420 LF of sanitary sewer to 12-inch VCP by open-cut replacement
- Connect Marshall Street sanitary sewer to the west along Vincent Court

Estimated Project Costs

Item	Unit	$/Unit	Quantity	Total
Mobilization and Demobilization	LS	$7,000	1	$7,000
Traffic Control	LS	$2,500	1	$2,500
Sewer Flow Control	LS	$2,100	1	$2,100
12-inch Remove and Replace	LF	$250	420 LF	$105,000
Marshall Street Connection	LS	$10,000	1	10,000
Reconnect Laterals	LS	$2,000	14	$28,000
Project Subtotal				***$154,600***
10% Contingency				$15,460
Construction Cost Subtotal				***$170,100***
Engineering, Legal, Admin., etc. @ 30%				$51,030
Total Capital Cost				**$221,100**

PROJECT LOCATION MAP

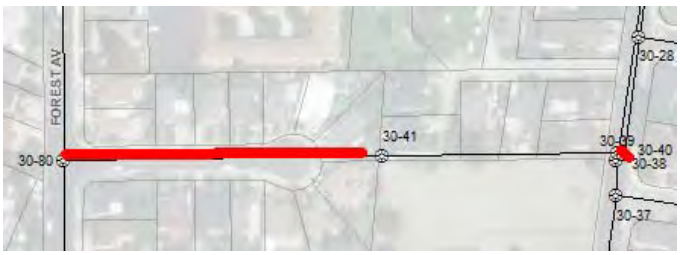

PROJECT PHOTOS

Intersection of Aspen Avenue and Pine Street looking West along Pine Street

Vincent Court looking East towards easement

PROJECT TRIGGERS

EXISTING CAPACITY DEFICIENCY:

Trunk sewers are currently undersized for existing PWWF conditions and surcharges more than two feet at multiple locations during wet weather.

CVSan

WASTEWATER COLLECTION SYSTEM MASTER PLAN UPDATE

ASPEN AND PINE TRUNK SEWER PROJECT SHEET

Revised: 5/14/18

WEST YOST ASSOCIATES

PROJECT: Marshall Street Trunk Sewer

Priority/Fiscal Year: Priority B: FY 2017/18

Risk Level: High Risk

Project Purpose: Upsize gravity sewer to accommodate PWWF and relieve wet weather surcharging on Marshall Street and points upstream and combine with parallel 6-inch in Marshall

Project Location: Marshall Street between Normandy Court and Greenacre Road

Existing Conditions:
- 10-inch VCP
- Existing capacity = 1.05 mgd
- 2006 ADWF: 0.19 mgd
- 2015 ADWF: 0.17 mgd

Model Reference: MH 30-18 to MH 30-40

Design PWWF: 1.72 mgd (10-year, 24-hour design storm)

Recommendations:
- Upsize 1328 LF of sanitary sewer to 12-inch VCP by pipe bursting

Estimated Project Costs				
Item	Unit	$/Unit	Quantity	Total
Mobilization & Demobilization	LS	$23,000	1	$23,000
Traffic Control	LS	$30,000	1	$30,000
Sewer Flow Control	LS	$8,500	1	$8,500
Abandon 6-inch	LF	$10	670	$6,700
12-inch Remove and Replace	LF	$250	1,350	$337,500
Extend & Reconnect Laterals	EA	$3,500	9	$31,500
Reconnect Laterals	EA	$1,500	25	$37,500
Project Subtotal				***$474,700***
10% Contingency				$47,470
Construction Cost Subtotal				***$522,200***
Engineering, Legal, Admin., etc. @ 30%				$156,660
Total Capital Cost				**$678,900**

PROJECT LOCATION MAP

PROJECT TRIGGERS

EXISTING CAPACITY DEFICIENCY:

Pipe is currently undersized for existing PWWF conditions, and surcharges more than two feet at multiple locations during wet weather.

PROJECT PHOTOS

Marshall Street at Greenacre Road looking North

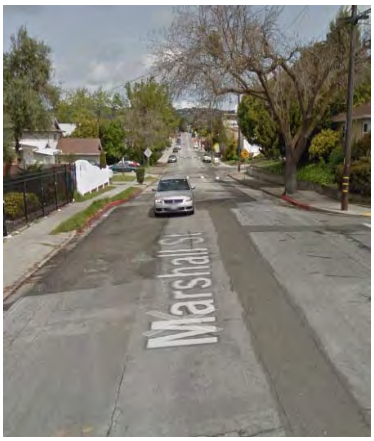

CVSan

WASTEWATER COLLECTION SYSTEM MASTER PLAN UPDATE

MARSHALL STREET TRUNK SEWER PROJECT SHEET

Revised: 5/18/18

WEST YOST ASSOCIATES

APPENDIX E

CIP Project Hydraulic Profiles

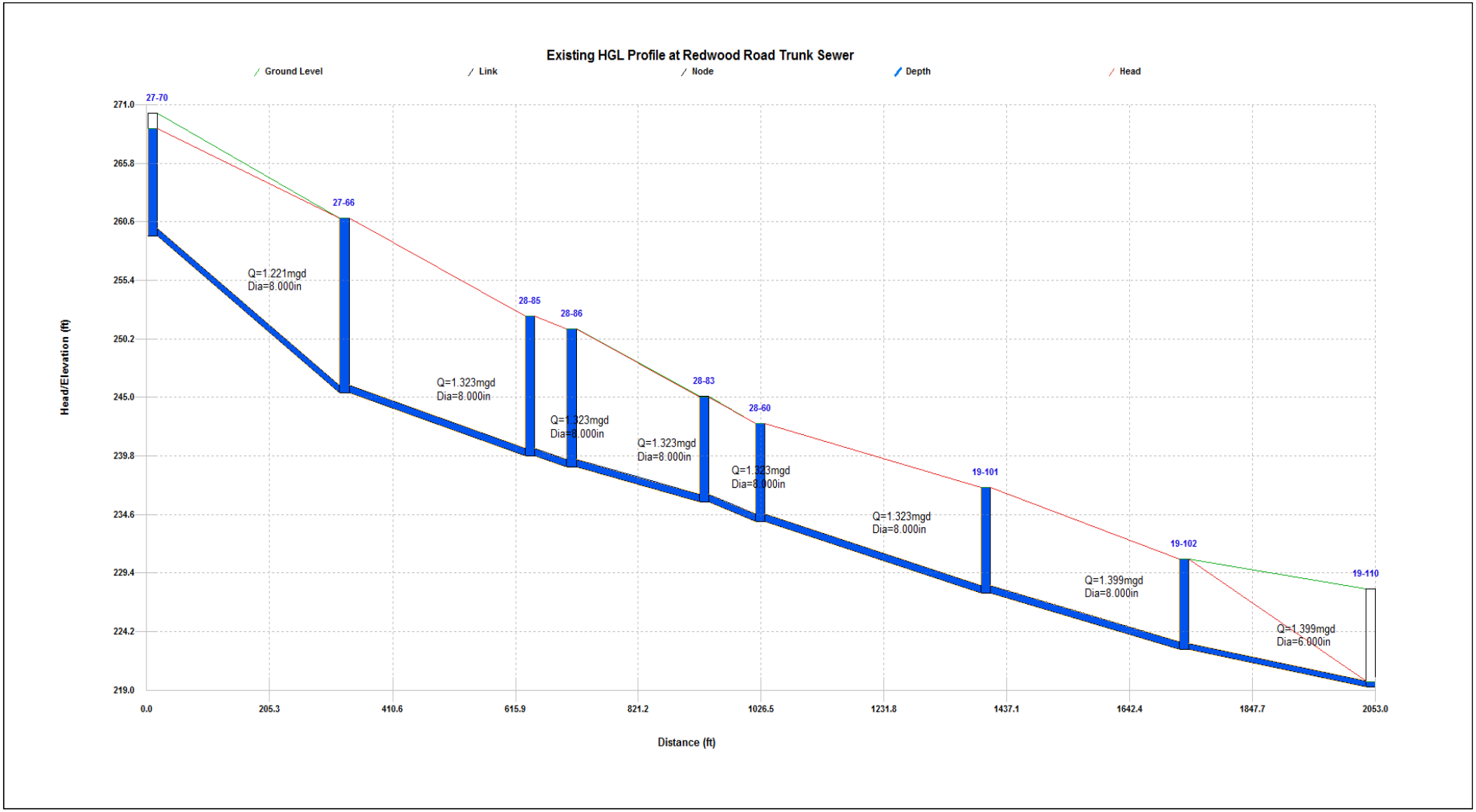

Figure E-1

Existing HGL Profile at Redwood Road Trunk Sewer

Castro Valley Sanitary District
WWCS Master Plan Update

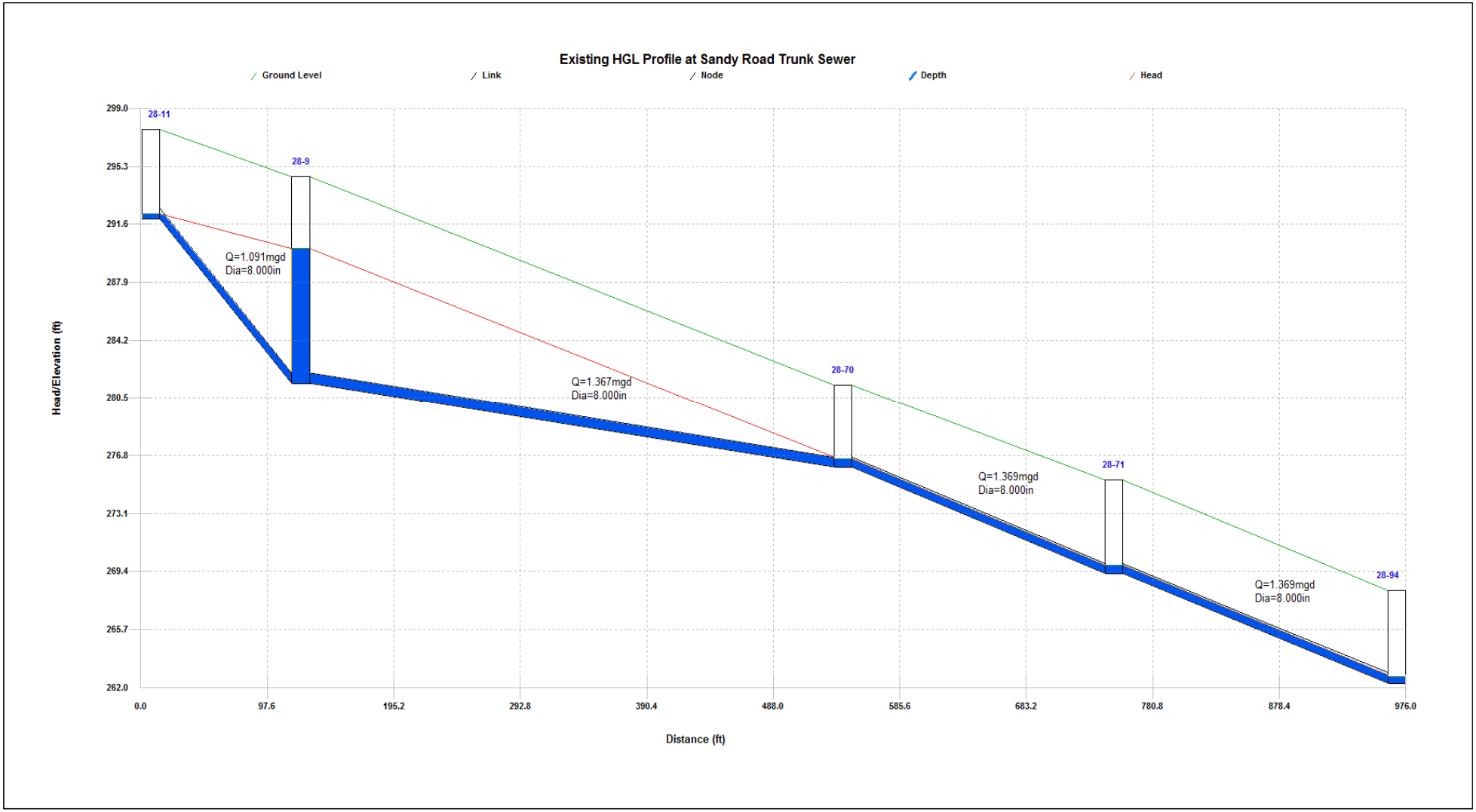

Figure E-2

Existing HGL Profile at Sandy Road Trunk Sewer

Castro Valley Sanitary District
WWCS Master Plan Update

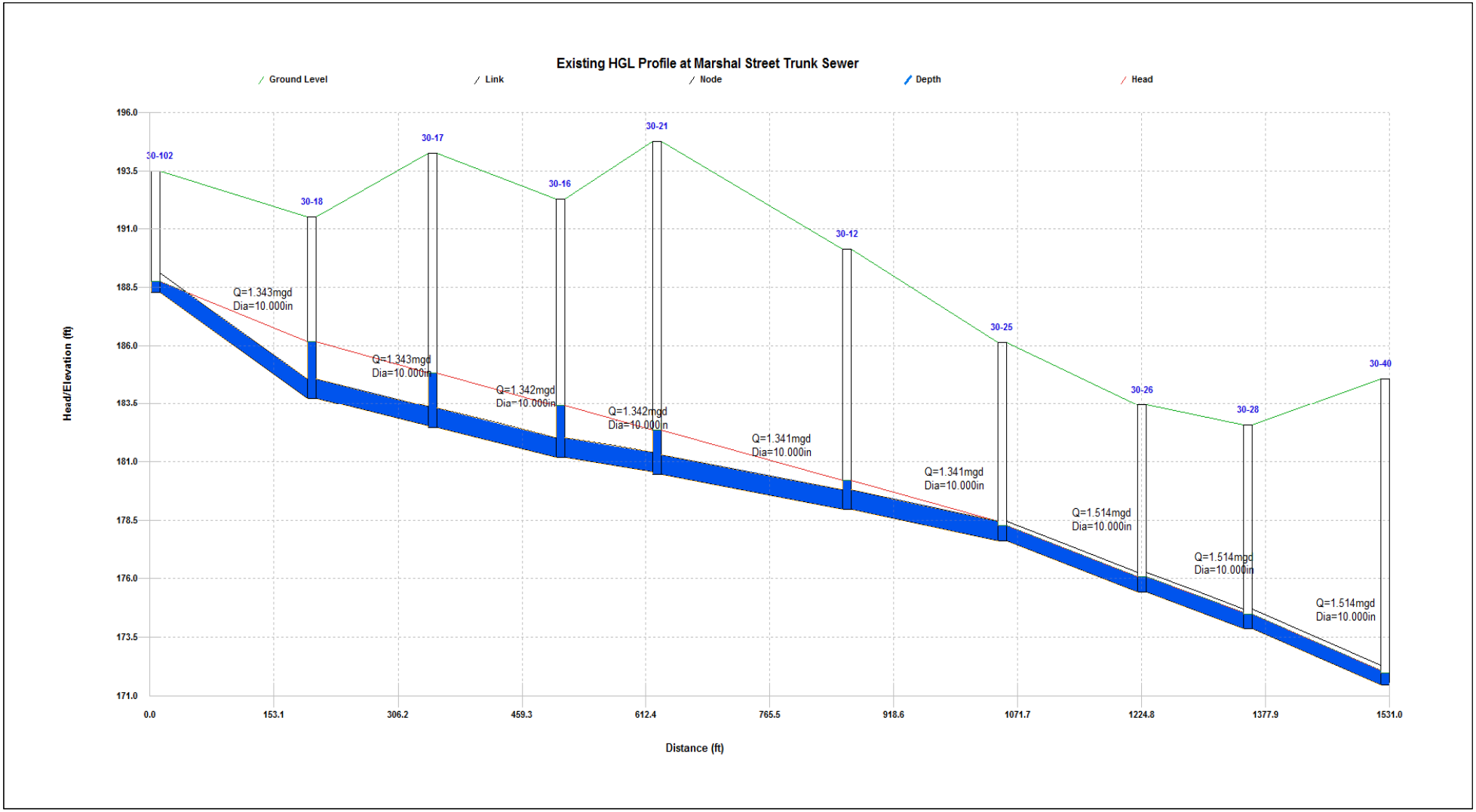

Figure E-3

Existing HGL Profile at Marshal StreetTrunk Sewer

Castro Valley Sanitary District
WWCS Master Plan Update

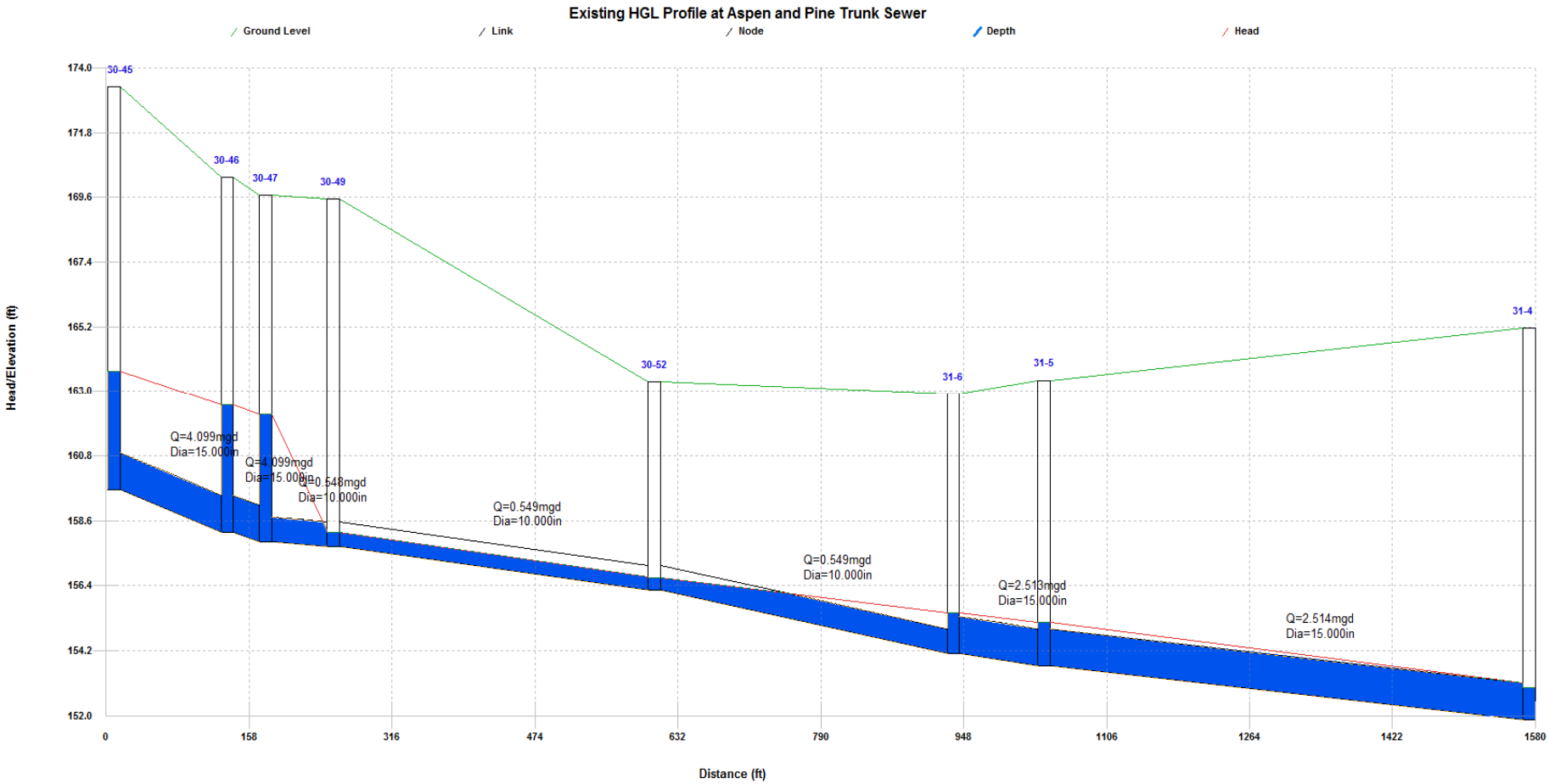

Figure E-4

Existing HGL Profile at Aspen and PineTrunk Sewer

Castro Valley Sanitary District
WWCS Master Plan Update

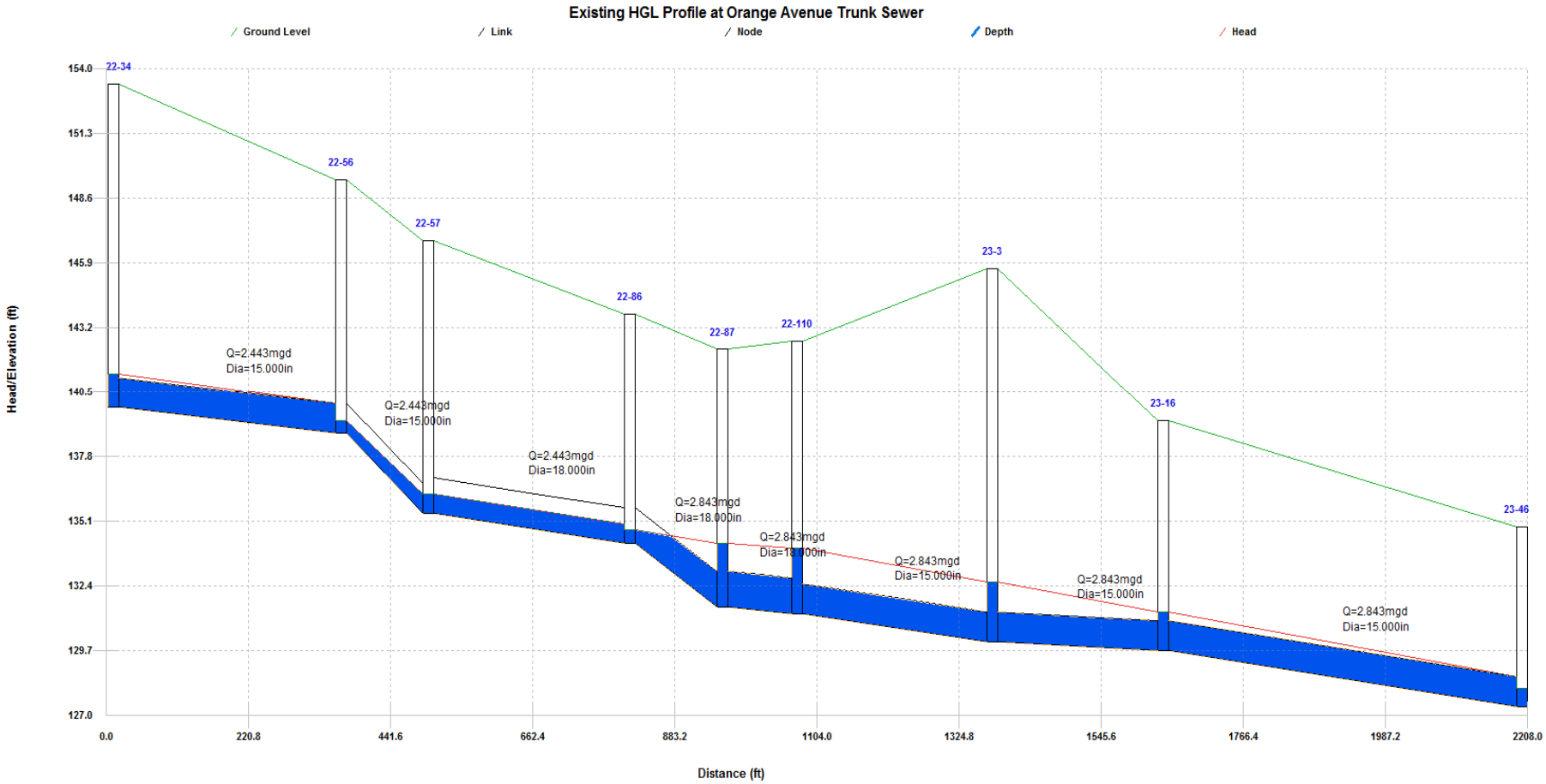

Figure E-5

Existing HGL Profile at Orange Avenue Trunk Sewer

Castro Valley Sanitary District
WWCS Master Plan Update

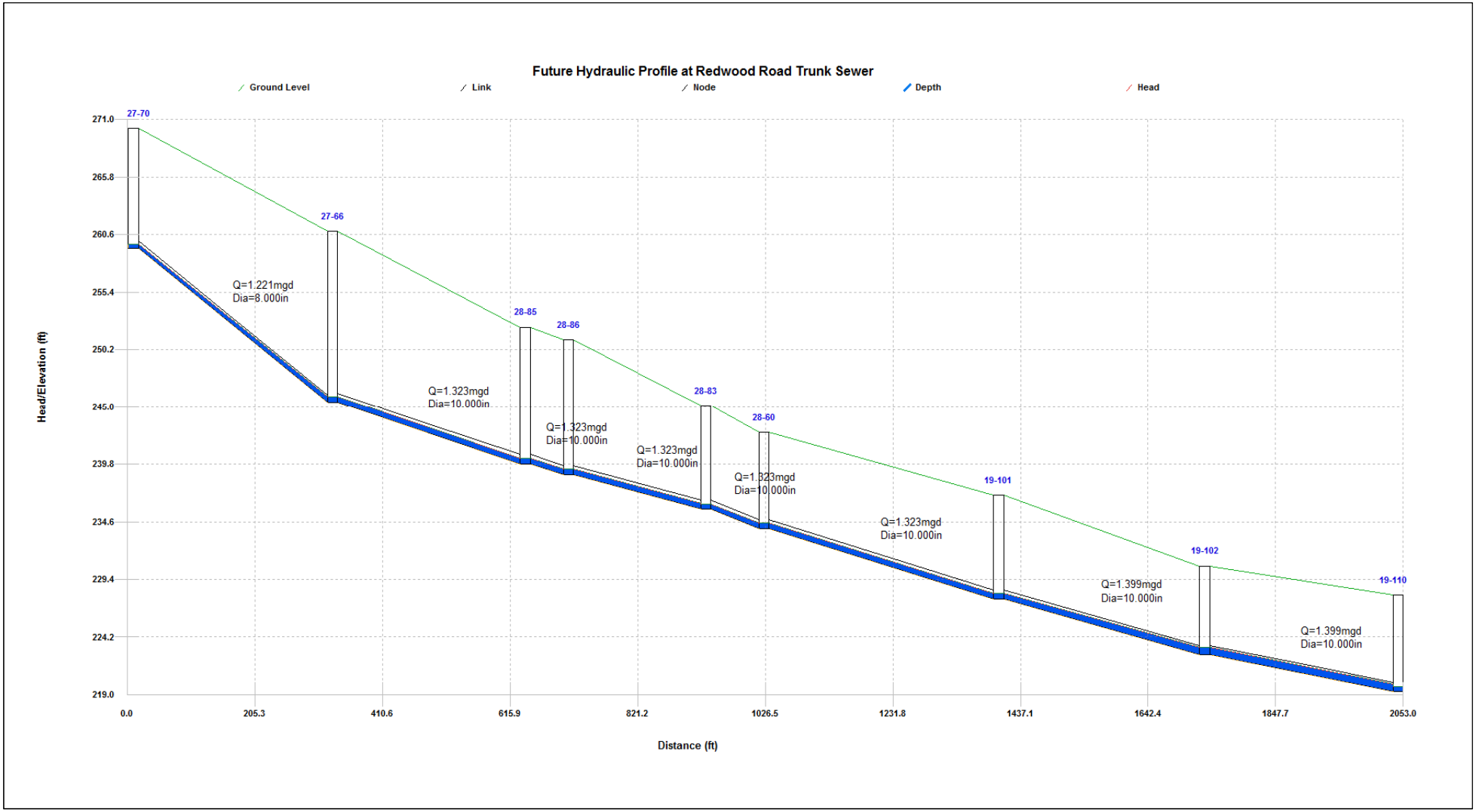

Figure E-6

Future Hydraulic Profile at Redwood Road Trunk Sewer

Castro Valley Sanitary District
WWCS Master Plan Update

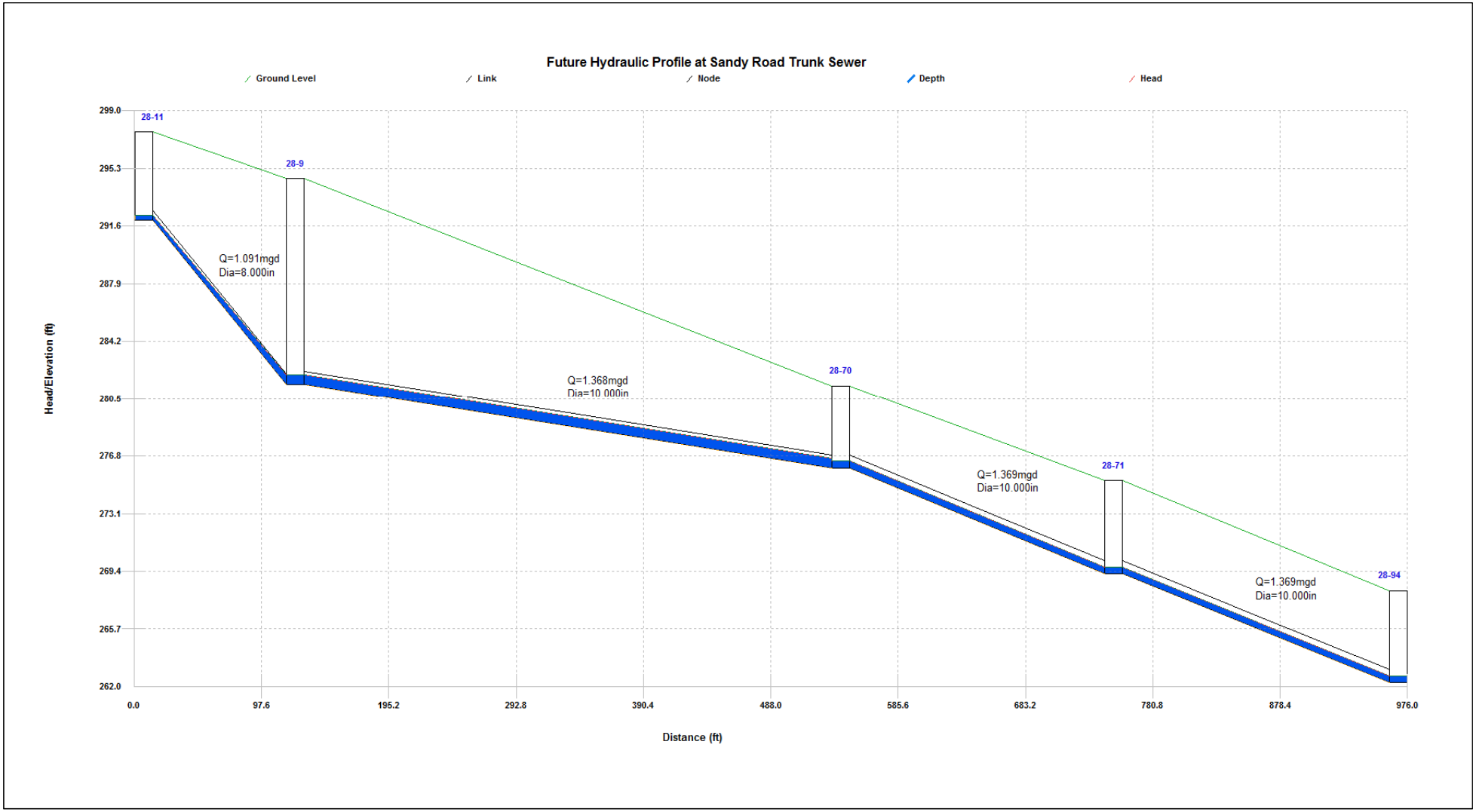

Figure E-7

Future Hydraulic Profile at Sandy Road Trunk Sewer

Castro Valley Sanitary District
WWCS Master Plan Update

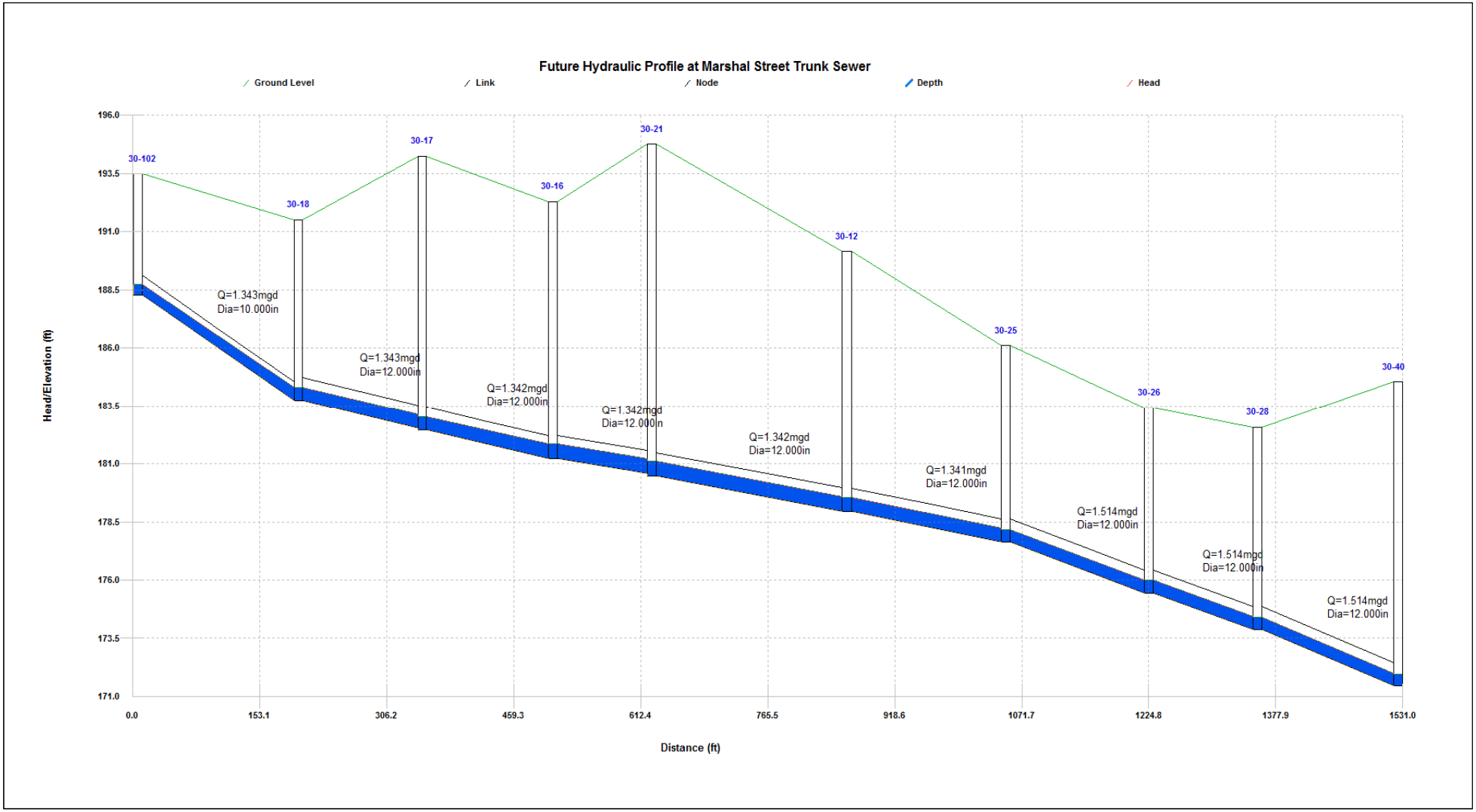

Figure E-8

Future Hydraulic Profile at Marshal Street Trunk Sewer

Castro Valley Sanitary District
WWCS Master Plan Update

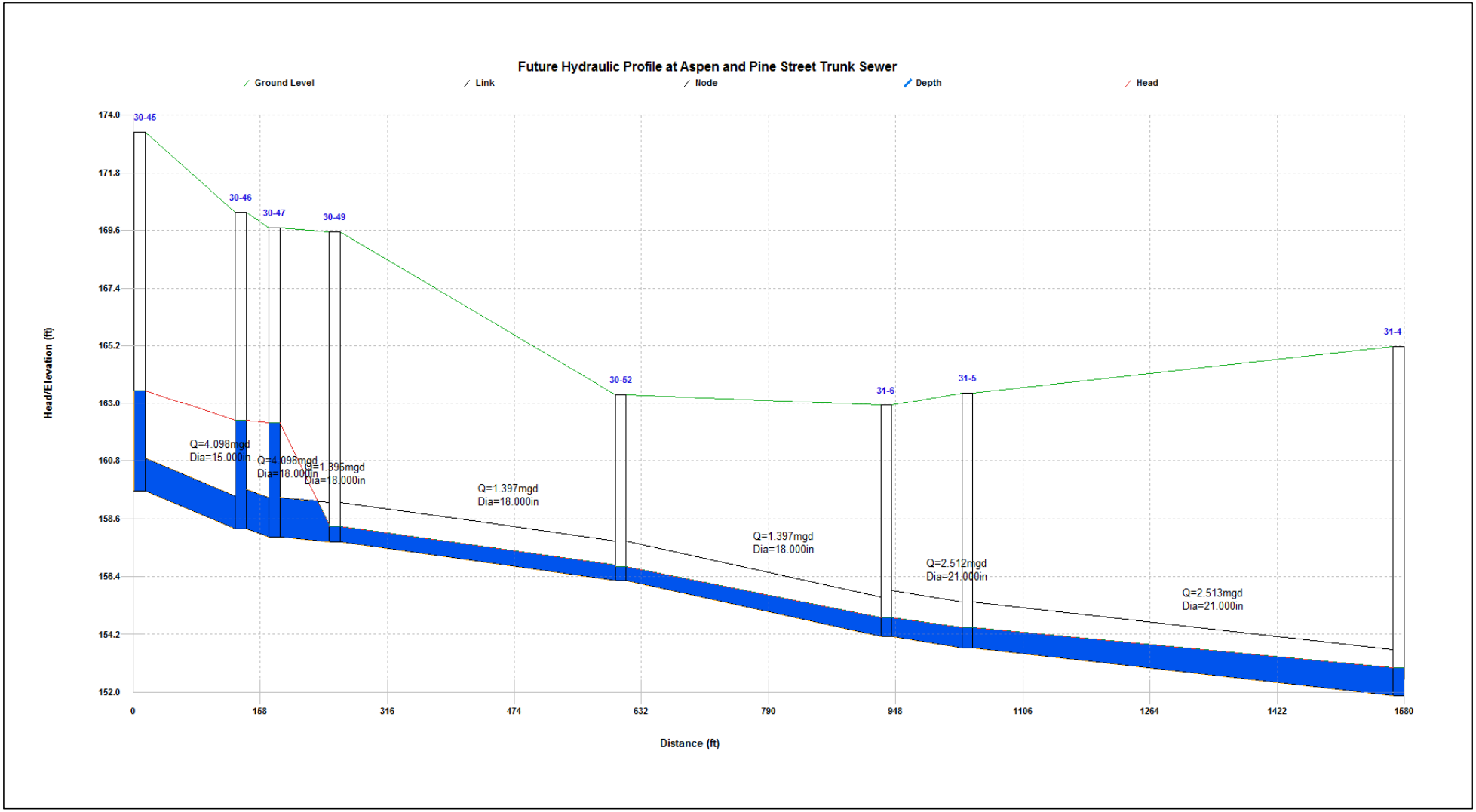

Figure E-9

Future Hydraulic Profile at Aspen and Pine Street Trunk Sewer

Castro Valley Sanitary District
WWCS Master Plan Update

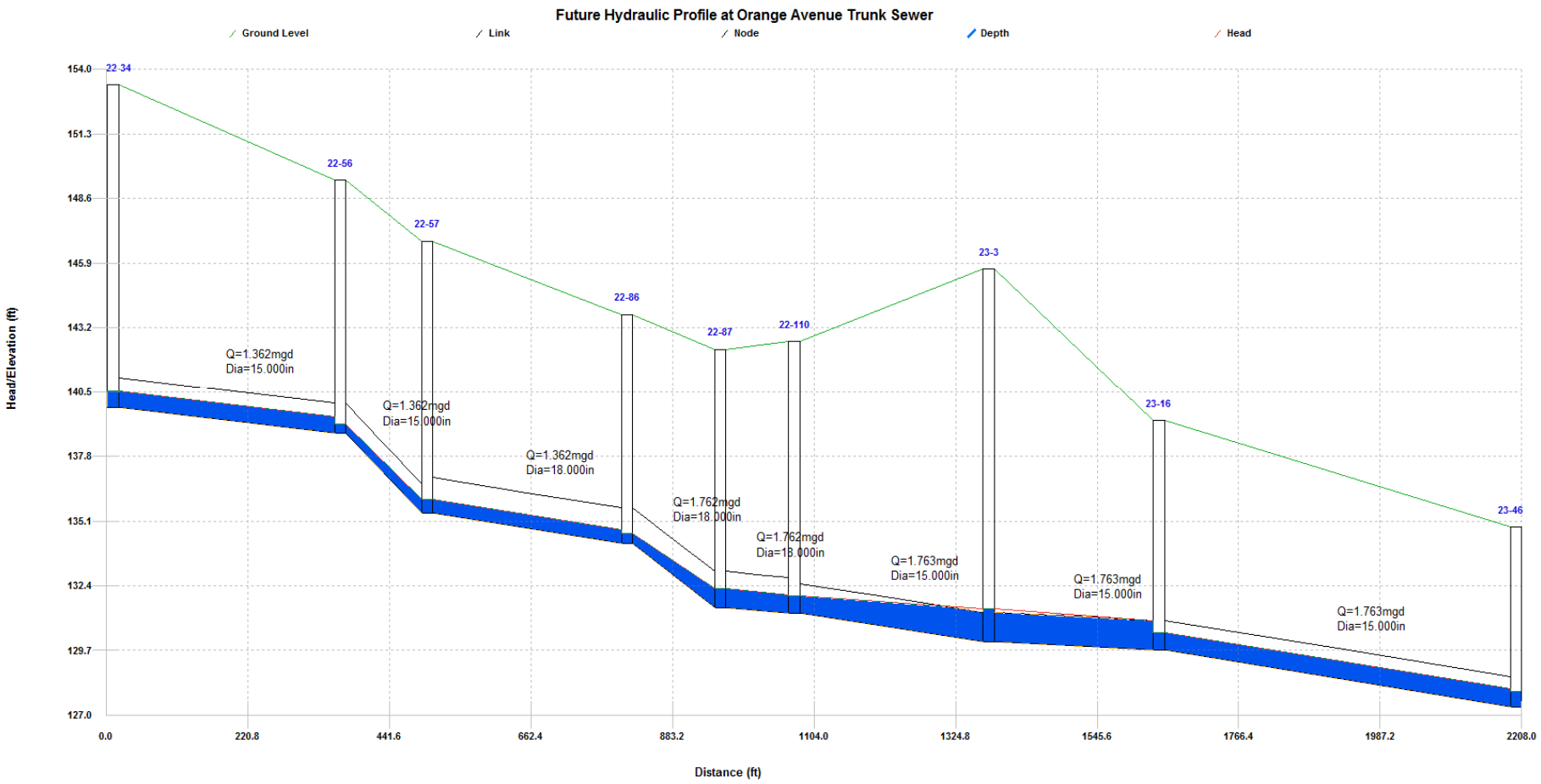

Figure E-10

Future Hydraulic Profile at Orange Avenue Trunk Sewer

Castro Valley Sanitary District
WWCS Master Plan Update

APPENDIX F

2015 Smoke Testing Work Plan

WEST YOST ASSOCIATES 25 YEARS 1990–2015

REGISTERED PROFESSIONAL ENGINEER
LANI GOOD
No. C073677
Exp. 3-31-17
CIVIL
STATE OF CALIFORNIA

TECHNICAL MEMORANDUM

DATE: November 5, 2015 Project No.: 455-20-15-06

TO: Landon Lochrie, Castro Valley Sanitary District

CC: Roland Williams, Castro Valley Sanitary District
Tyree Jackson, Castro Valley Sanitary District
Paul Loving, SFE Global

FROM: Lani Good, P.E., R.C.E. #73677

SUBJECT: 2015 Smoke Testing Work Plan

INTRODUCTION

During the recent update of the Castro Valley Sanitary District's (CVSan's) hydraulic model update (using flow monitoring data collected during the 2014/15 wet weather season), West Yost Associates (West Yost) discovered a new sub-basin (see Figure 1) with abnormally high inflow and infiltration (I/I) rates, and validated the previously-known high I/I area (see Figure 2). As a part of CVSan's ongoing I/I reduction efforts, West Yost recommends that CVSan engage SFE Global (see Attachment A for SFE Global proposal) to conduct smoke testing in these areas of the CVSan wastewater collection system.

The objective of smoke testing is to gather evidence of the presence of indirect sources of infiltration (such as broken sewer pipes, offset joints, and other sewer defects) and to confirm locations of direct inflow such as connections from roof leaders, stairwells, yard drains, driveways, patios, area drains, foundation drains, broken or un-capped clean-outs, defective manholes, and abandoned building sewers. This Technical Memorandum (TM) outlines a work plan for the smoke testing work on this project.

PRE-WORK ACTIVITIES

This section describes the pre-testing activities that will be accomplished prior to commencing any field work.

Public Notification

Residents, institutions, and businesses in the area to be smoke tested shall be notified prior to initiation of smoke testing. Various methods shall be used to notify residents and businesses including door hangers, signs, and verbal discussions where feasible. Notifications will be performed as follows:

1. CVSan shall distribute an initial letter notifying property owners and residents of smoke testing activities at least one week prior to smoke testing (see Attachment B for a draft notice).
2. SFE Global crews (crews) shall distribute pre-approved advance notice door hangers (see Attachment C for a draft notice) 48 to 72 hours before smoke testing. If smoke testing is delayed, crews shall re-distribute door hangers 48 to 72 hours prior to the rescheduled time of smoke testing.
3. Prior to testing each day, crews shall meet daily with CVSan staff at the CVSan Engineering Office at 20211 Patio Drive, Suite 200 in Castro Valley in order to inform CVSan staff of where testing will occur that day. CVSan staff shall notify Fire and Police Departments via fax of a map of the areas to be tested that day. Delivery methods may change during the project at the request of the Fire or Police Chief (e.g., email, hand-delivery).
4. Prior to the test, crews shall make personal contact with a responsible person at schools, hospitals, nursing homes, and all other institution/public facilities in the immediate area of the smoke testing.

All notifications shall direct residents to call the CVSan Main Office at (510) 537-0757 with questions and concerns. Field crews shall refer all concerned residents to Landon Lochrie in the CVSan Engineering Department.

Permits

Work within CVSan easements and right-of-way does not require a permit. No work will be performed in State and/or County right-of-ways.

Weather, Ground, and Ground Water Condition Requirements

Smoke testing shall not be performed on rainy days or when saturated soil conditions exist. Additionally, smoke testing shall only be performed when the groundwater level is low enough to provide accurate smoke testing results. Testing shall be closely monitored on windy days. If smoke coming out of the ground is blown away so quickly as to escape accurate detection and/or photo documentation, testing shall cease until such time that weather conditions permit an accurate record of smoke testing results. Previously notified residents, businesses, and institutions shall be re-notified if smoke test date ranges have expired before completion.

Flow Control

Smoke testing shall normally be accomplished without the need for bypass pumping. Crews shall set up temporary plugs or flow barriers as required to contain an adequate volume of smoke within the section of sewer being tested. Crews shall monitor the resulting surcharged sewer at the manhole upstream of the section of sewer being tested, and prevent overflow conditions from occurring by removing the flow barriers in a timely manner.

FIELD WORK

This section describes the field work for smoke testing portions of CVSan's collection system.

Field Work Sequencing

Approximately 3.6 miles of pipeline will be inspected with efforts concentrated within five of the City's collection system basins, as summarized in Table 1 and shown on Figures 1 through 5. Smoke testing rates vary widely depending on the number of defects found, but testing rates range from 2,000-4,000 linear feet of mainline sewers per day on average. Field work will begin on Monday, October 13, 2014 beginning in Basin 7. The work sequence for subsequent basins is shown in Table 1.

Table 1. Smoke Testing Field Work Sequence

Work Sequence	Basin Number	Total Pipe Length		Pipe Diameter Range, inch	Number of Manholes	Average Pipe Segment Length, feet
		feet	miles			
1	3 West	9,929	1.9	6 to 8	49	207
2	7	8,976	1.7	6 to 8	45	204
	Total	**18,905**	**3.6**	-	**94**	

Field Work Hours

Work is not permitted to begin earlier than 7 a.m. or extend past 6 p.m. Smoke testing field work is not permitted to occur on weekends, as CVSan personnel will not be available to answer resident calls or assist the field crews. Notices may be distributed to residents on weekends, as necessary to keep the work on schedule.

Communication Protocol

1. Before beginning work each morning, smoke testing field crew will meet with CVSan staff at the CVSan Engineering Office located at 20211 Patio Drive, Suite 200, Castro Valley. The field crew will meet with CVSan staff at approximately 7:30 am inside the Engineering office (Suite 200) so that the crew can be mobilized and ready to begin work at 8 am.
2. CVSan staff will not be present during all smoke testing activities, but can be contacted if abnormal issues arise. Smoke testing crews should call Landon Lochrie at (510) 506-3597 if major defects such as storm drain cross connections or illegal connections are found.
3. All other maintenance issues can be directed to the CVSan main office at (510) 537-0757 during work hours, or the wastewater emergency response hotline at (510) 506-5821 after hours.

Field Activities

Safety. Field work safety shall be according to SFE Global's Field Work Safety Plan (see Attachment D) and according to State and Federal law.

System Evacuation/Preparation. When crews open a manhole cover during the smoke testing procedures, prior to placing any smoke into the manhole – crews shall check gas levels and evacuate the manhole as necessary.

Site Security. The work site shall be secured by placing traffic control signs and safety devices at the boundary of the work site.

Confined Space Entry. Crews shall minimize the physical entry of personnel into the sewer facilities. If required, manhole entry shall be performed in accordance with Federal, State, and local laws, regulations, policies, requirements, and standards especially those promulgated by OSHA.

DATA MANAGEMENT PROCEDURES

Smoke testing data will be recorded in the field using SFE Global's customized MS Access database. Data will be processed by SFE Global and submitted in a MS Access database with any associated image files. Crews shall record data on the SFE Global Smoke Testing Report Form and enter codes into the SFE database (using Microsoft Access). At the completion of the project, SFE Global will submit the database and images to CVSan to ensure data type compatibility with CVSan's Lucity computerized maintenance management system. Smoke testing data collected includes, but is not limited to:

- Date and time of the test, weather conditions, and testing personnel.
- Location, including reference to the relevant manhole (upstream and downstream manholes ID numbers) and the nearest street address.
- Area and type of surface drained at the location of the smoke leak.
- Defect source type and description of the smoke leak, including intensity of smoke code and amount.
- Digital color photographs of the results of each test.
- Crews shall draft out a schematic layout of the manholes and sewer mains under testing including address and location, manhole ID numbers, photo number and direction taken, defect source type, accurate location of defect within the test area and type of surface drained. (Note geographical orientation relative to north.)
- All smoke exit locations shall be surveyed using a GPS or conventional survey methods if GPS survey is not feasible.
- A separate Smoke Test Report shall be submitted for each sewer main segment tested regardless if a defect is found or not.
- Main line defects and service lateral defects will be carefully scrutinized to ensure that a conservative determination of public vs. private side defects is made.

FIGURES

Last Saved: 11/3/2015 4:09:56 PM \\Wcs-FS01\Walnut Creek\Clients\455 Castro Valley Sanitary District\06-13-03 Dist Engineer\GIS\Figures\Smoke testing_2015_Basin 3W_Port.mxd : nshojaei

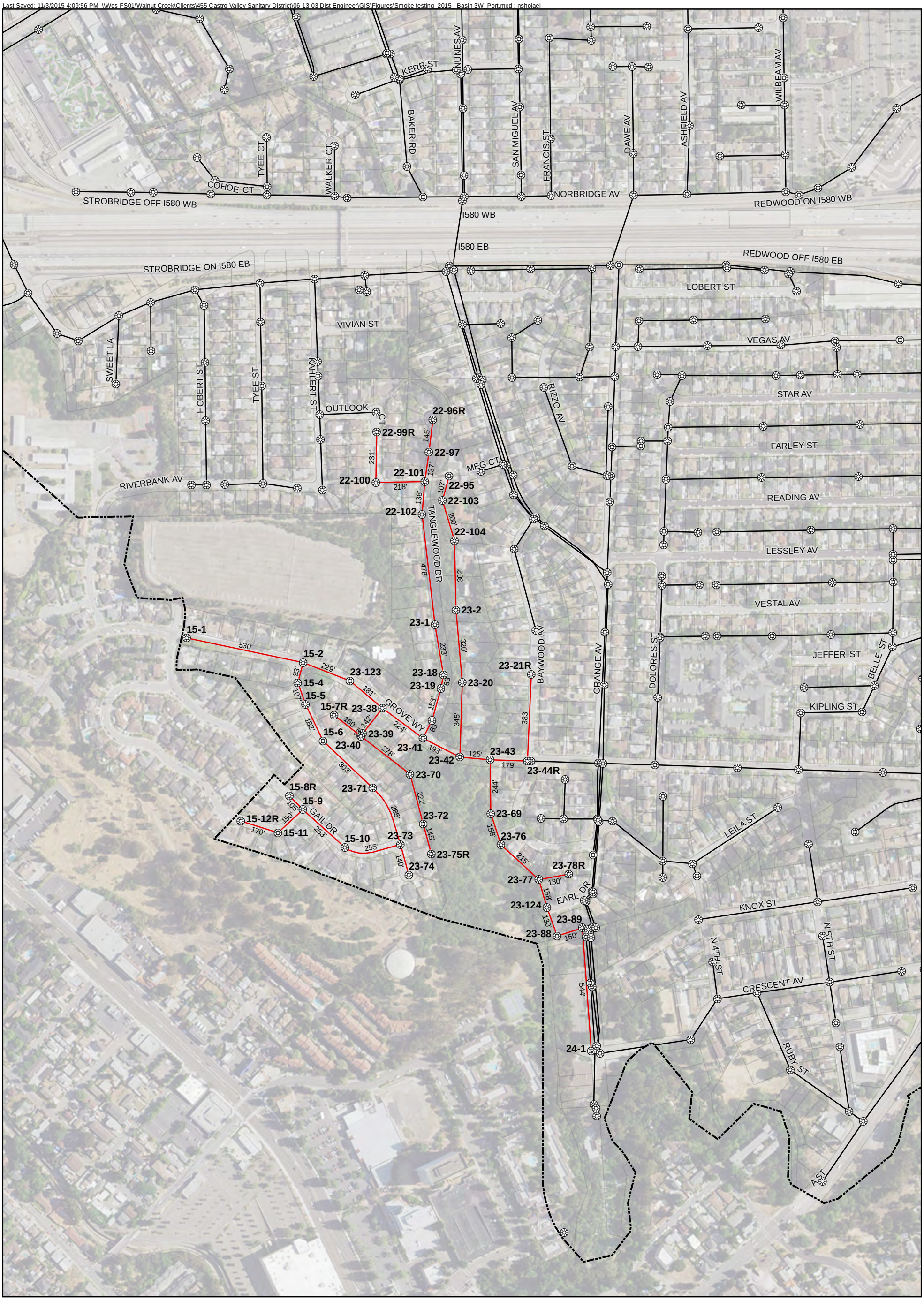

Symbology

- Manhole
- Pump Station
- 2015 Smoke Testing
- Sanitary Sewer
- Force Main
- District Boundary

N

0 200 400

Scale in Feet

Figure 1

2015 Smoke Testing

Castro Valley Sanitary District
District Engineering

Last Saved: 11/3/2015 4:16:42 PM \\Wcs-FS01\Walnut Creek\Clients\455 Castro Valley Sanitary District\06-13-03 Dist Engineer\GIS\Figures\Smoke testing 2015 Basin 7 Port.mxd : nshojaei

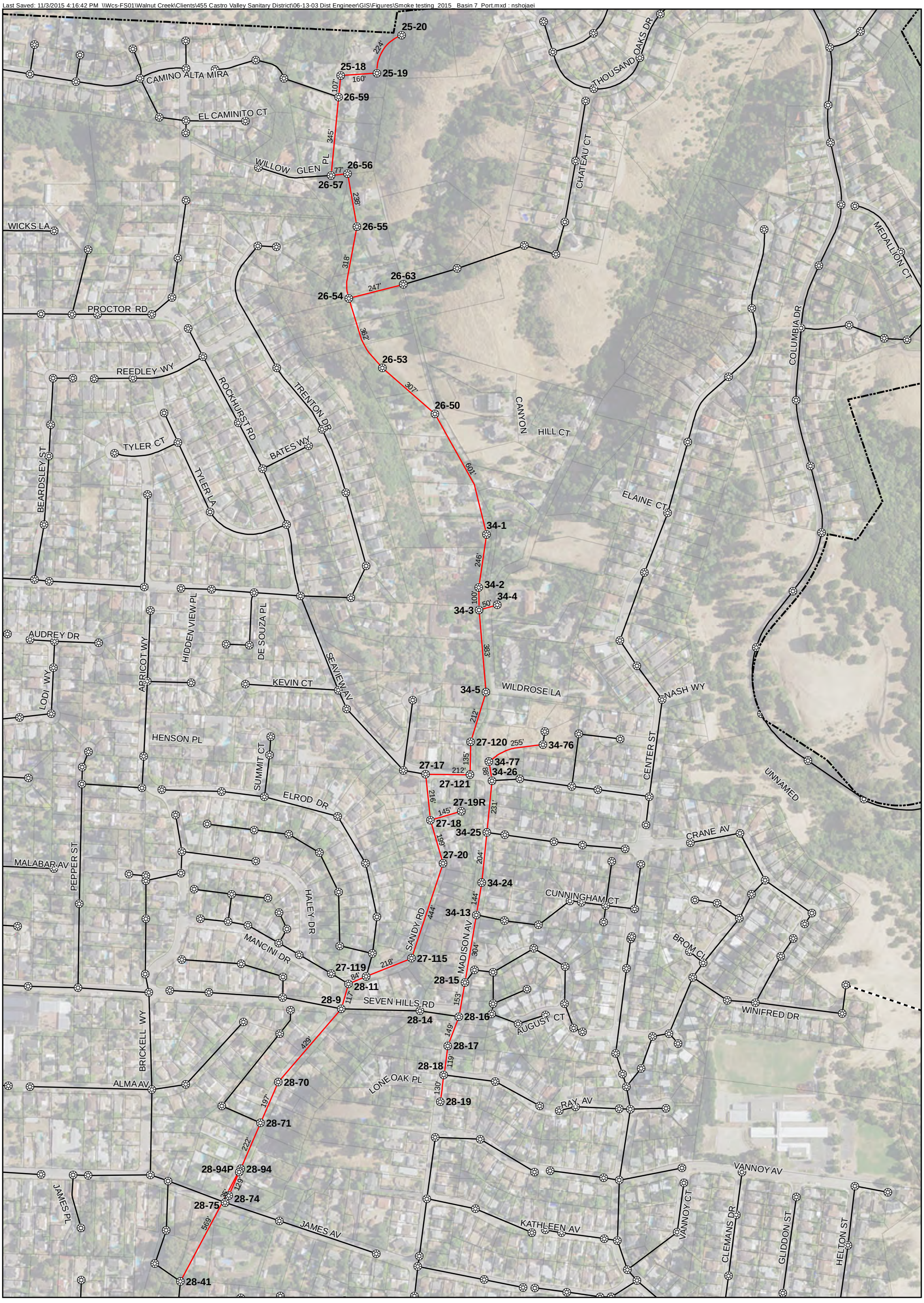

Symbology

- Manhole
- Pump Station
- Force Main
- 2015 Smoke Testing
- Sanitary Sewer
- District Boundary

N

0 200 400

Scale in Feet

Figure 2

2015 Smoke Testing

Castro Valley Sanitary District
District Engineering

ATTACHMENT A

SFE Global CVSan Sanitary Sewer Smoke Testing Proposal

SFE Global - Washington
1313 E Maple Street, Suite 201-408
Bellingham, WA 98225
Toll Free: 1-866-332-9876

SFE Global - California
1104 Corporate Way
Sacramento, CA 95831
Toll Free: 1-866-332-9876

November 3, 2015

Ms. Lani Good, PE

WEST YOST ASSOCIATES
1777 Botelho Drive, Suite 240
Walnut Creek CA, 94596

SUBJECT: CASTRO VALLEY SANITARY DISTRICT - SANITARY SEWER SMOKE TESTING

Dear Ms. Good:

Thank you for the opportunity to submit this proposal for sanitary sewer smoke testing services with the Castro Valley Sanitary District. Services and reporting supplied by SFE Global, along with estimated fees, are described below.

SFE GLOBAL

SFE GLOBAL (SFE) is a municipal and industrial service company specializing in underground infrastructure assessment and monitoring. SFE has been conducting services of this nature for Municipal, Governmental and Industrial clients since 1991.

SFE has five (5) offices between the United States and Canada (Bellingham, Sacramento, Vancouver, Edmonton, Winnipeg,) with a total of 30 employees. We have excellent references with a track record for delivering project objectives on time and on budget.

SFE Services Include:

- All Applications of Flow Monitoring and Water Quality Monitoring - Sanitary Sewers, Storm Sewers, Creeks, Culverts, Landfills, Industrial Effluent, Billing Stations, Temporary and Permanent Installations, LID (Low Impact Development) Performance Monitoring, and Complete Hydrologic Gauging Stations.

- GoData Web-Based Data Management Platform – Versatile web-based data management system for all data types. Organize, Graph, Alarm, and Analyze various types of monitored infrastructure data

- Meteorological Monitoring – Supply, Installation, and Monitoring of Complete Weather Stations

- Rhodamine WT Dye Calibrations of Flow Monitoring Stations. Verify and Improve the Accuracy of your Existing Flow Monitoring Station. Regulatory Agency Compliance

- Sewer Smoke Testing and Dye Testing. Reduce I&I and Illegal Sanitary Connections

- 3D Mapping of underground pipelines

- Manhole Inspection Programs. Data Base Catalogued Inventory Complete with Condition Assessments.

- Unidirectional Water Main Flushing.

- Reservoir Cleaning, Disinfection, and Inspection.

- Domestic Water Flow testing and Data Logging Services for Water Model Calibration

- Pipeline Pigging - Cleaning of Domestic Water Mains, Sewer Force Mains, Siphon Mains, and Industrial Product Pipelines. Renew Pipelines and Reduce Pumping Costs.

SEWER SMOKE TESTING OVERVIEW

Smoke Testing Services along with subsequent reports supplied by SFE are directly related to the investigation of storm water cross connections and system deficiencies within the sanitary and/or storm sewer systems. The objective of a typical smoke testing project is to investigate and itemize various storm water inflow sources and report on all findings. A sewer smoke testing program is an extremely effective method of immediately determining storm water cross connections that are contributing to inflow and infiltration to a sewer system.

A typical smoke testing system is illustrated here. A large fan or blower is placed over a centrally located manhole pushing non-toxic smoke-filled air through a sewer line. SFE utilizes only industry leading Hurco brand smoke machines and liquid smoke for all projects as it is non-toxic and leaves no residue.

The smoke travels under low pressure and will fill the main line plus any connections; then quickly follows the path of any system defects including cracks and direct cross connections to the ground surface. After placing the blower and filling the lines with smoke, SFE staff will perform a visual inspection of the area being tested. This inspection includes GPS locations of the incidents, photograph documentation, along with standard field incident forms being filled out.

As indicated, SFE Global uses only Hurco brand smoke testing equipment. We own and operate all equipment to be utilized for this project. SFE will have two working smoke testing units available at all times should one become damaged or fail. Sufficient liquid smoke to complete the entire project will be on hand from the beginning. All incident logs and cameras are kept in good working order and image files are uploaded to a secure backup drive on a regular basis throughout the day. SFE owns and maintains all service vehicles used on the project. Each vehicle is equipped with necessary safety gear, lights, cones, signage, tools, and all necessary equipment / consumables required to complete the project.

Once the smoke machine is set in place at the first manhole of each respective run and adjacent or end manholes have had the air void blocked with custom rubber matting (set in place from the surface), the smoke run is now ready to start. Upon starting the smoke machine with liquid smoke injection, SFE staff then walk the street in search of visible smoke, or in the case of roof vents, an incident may be written up if no smoke is observed. (Indicating there may be a cross connection) SFE checks each property carefully; paying special attention to clean-outs and roof leaders. It is not unusual for smoke to be seen coming up from grass, wooded areas, and cracks in the concrete or asphalt. All incidents are recorded on the field sheet template and at the end of each day are passed along to our Operations Manager for input into the database. All image files are also transferred and archived on a daily basis.

Weather can play an important role in the quality of your smoke testing results. Best results are seen when the water table is low and on dry days, due to the fact that water is an excellent vapor barrier. Smoke testing should also be avoided on very windy days as it becomes possible that even a light breeze can disperse smoke before it becomes visible.

SFE utilizes an in-house designed custom smoke testing database for all reporting. This software and database system was developed to maximize efficiency in reporting smoke test results in a clear, precise manner. Standard reports include executive summaries, all test procedures, daily event logs, pictures, and defect codes with pinpoint locations. All fields can be altered to suit the needs of our client and with the MS Access database, importing into various public works management software is very straight forward. In addition, if our client has their own smoke test log form, we're happy to utilize this as means of delivering all pertinent incident reports. Our goal is to have our clients obtain useful information in a format that suits their needs.

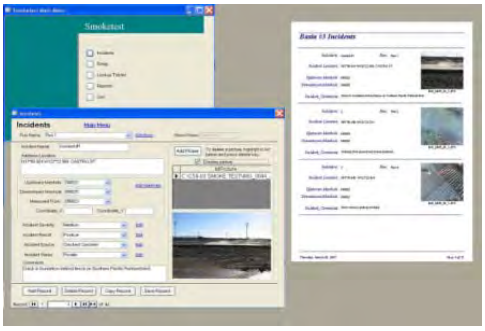

PLANNING AND PERSONNEL

Sewer smoke testing, although a simple concept, requires careful planning and an experienced Project Manager / Team to execute a successful assignment. Planning tasks will include the following items:

- ✓ A pre-project meeting with the City to better understand their needs and priorities. At this time, SFE expects to thoroughly review each party's respective responsibilities and will draft a working document outlining all deliverables.

- ✓ Notifications for website, Fire Dept, Police, local newspaper, and all residential/commercial notices will be reviewed and approved by the City prior to being distributed. Hand delivered door hanger notices are a standard for SFE Global.

- ✓ Each basin's runs are to be prioritized and SFE to draft a smoke test run plan for the first basin, to be approved by the City. Any subsequent basin planning to be completed on an on-going basis, giving the City Project Manager sufficient time to review and approve prior to new notifications being delivered.

- ✓ SFE will work with the City in identifying any residential, commercial, or industrial properties that may need a more comprehensive notification program, such as hospitals or schools.

- ✓ SFE understands the need to be polite and courteous with the public in all the services we provide. Our field technicians and Project Managers are all experienced in this matter. We appreciate that smoke entering one's residence can be extremely alarming. Our technicians are all well versed in explaining the situation to distraught residents.

Key Personnel for this Project are:

Paul Loving – SFE Operations Manager - Mr. Loving will be the lead responsible for the success of this project; serving as a liaison between project team members and overseeing all SFE activities. Paul will be responsible for day to day reporting along with QA/QC of all field data collected. Mr. Loving brings 25 years of management experience to this project along with over 12-years of smoke testing experience.

Adrian Marshall – SFE Project Manager. Mr. Marshall has been with SFE for over ten years and routinely takes the technical lead on many projects. An invaluable asset to our team, not only is Adrian very familiar with all aspects of a smoke testing project, but he also maintains our fleet of data loggers, flow meters, and small engine equipment. Mr. Marshall's role on this assignment will be to support the Operations Manager through a key role in identifying smoke and system defects; and reporting on them appropriately.

Dylan Carvin – SFE Technician and Safety Officer. Mr. Carvin has been with SFE for a little over 3-years. Much of his work to date has been involving our sewer flow monitoring services, pipeline pigging services and potable water reservoir cleaning and disinfection services. Dylan's role on this project will be to use his safety training and knowledge of our corporate safety manual to draft a hazard assessment for review prior to the project start date. In addition, Dylan will execute and document daily toolbox meetings and act as support to the team through photo documentation of visual smoke.

REFERENCE PROJECTS

In recent years, SFE Global has completed many smoke and dye testing projects. Please see below for just a few of our references.

1. **City of Folsom / West Yost Associates - 281,000lf of Notification Delivery, Sanitary Sewer Smoke Testing, and Incident Reporting**

- Roger Kohne, P.E.
  Senior Civil Engineer
  City of Folsom
  50 Natoma Street
  Folsom, CA 95630
  P: (916) 351-3455

2. **City of Dundee / Kennedy Jenks Consultants – 35,000lf of Notification Delivery, Sanitary Sewer Smoke Testing, and Incident Reporting**

- Dana Devin-Clarke, P.E.
  Kennedy/Jenks Consultants
  200 S.W. Market Street, Suite 500, Portland, Oregon, 97201
  P: (503) 423-4000

3. **City of Pacifica – 185,000lf of Notification Delivery, Sanitary Sewer Smoke Testing, and Incident Reporting**

- Ms. Maria P. Aguilar, P.E.
  City of Pacifica
  Engineering Department
  700 Coast Highway
  Pacifica, CA 94044
  P: (650) 738-4664

4. **City of Richmond, CA and Lake Berryessa, CA – 60,000lf of Notification Delivery, Sanitary Sewer Smoke Testing, and Incident Reporting**

- Mr. Animesh Irkulla
  Manager, Asset Management
  Veolia Water North America
  2300 Contra Costa Blvd., Suite 350
  Pleasant Hill, CA 94523
  P: (408) 621.8721

SCHEDULE

At this time we've assumed a work schedule of Monday-Friday, 8:00am-5:00pm. We are able to mobilize for a planning meeting with the City immediately upon being issued an Intent to Contract letter or PO#, and can fully mobilize to complete the project within 1-week of the execution of a contract.

FEES

Type of Work	Specific Details	Fees
Sanitary Sewer Smoke Testing	• Scope as detailed in the aforementioned approach. • Fee based on a 18,900lf of sewer to be tested • Fee includes door to door notice delivery	$21,950

Terms & Conditions:

- ***Fees exclude any applicable taxes.*** *All invoices require payment within thirty (30) days.*
- *Quotation is valid for 60 days.*
- *Delays or disruptions through no fault of SFE and causing project interruption may result in a crew and equipment standby rate of $425/hour.*
- *Should there be a requirement for third party traffic control (i.e. Traffic Control Company for lane closures or high traffic areas) at any location, and should this be the responsibility of SFE, our fees will be invoiced at cost plus 10%.*
- *Any reports required will be submitted to our client in a digital format (.pdf)*

Thank you again for the opportunity. We are looking forward to working with you on this assignment. If you have any questions or require any further information please do not hesitate to contact me directly.

Sincerely,
SFE Global

Mike Lemmen
Director - Business Development
SFE File#U15-141P2ML

ATTACHMENT B

Draft Smoke Testing 1 to 2 Week Notice

Notice of Smoke Testing

In approximately one or two weeks during the morning and afternoon, the Castro Valley Sanitary District will be smoke testing the sanitary sewer lines in your area. Work will occur Monday through Friday between the hours of 8:00 am and 3:00 pm. Notification will occur again one to two days before the test.

The Castro Valley Sanitary District (CVSan) will be doing smoke testing to the sanitary sewer lines in your area. These tests involve blowing harmless smoke into parts of the sewer system to find damage, improper connections, and where unwanted water may be entering CVSan's sewer system. As a result, smoke may be seen coming from roof vents, building foundations, catch basins, clean-outs, down spouts, sewer laterals or manhole covers. The smoke will not enter your home or business if it is properly plumbed, vented, and the water traps contain water.

Caution to residents:
Water can evaporate from unused plumbing fixtures. If you have a bathroom or plumbing fixture that is not used or is seldom used, traps should be filled by running water in the fixtures the day before scheduled smoke testing and on a monthly basis thereafter in order to prevent sewer gas from entering the home or office.

The smoke used is a non-toxic substance that is harmless to humans, pets, food, and material items. If smoke does enter the building, it will clear in a few minutes with proper ventilation. Please advise a representative of the smoke testing crew if any leakage occurs in your home or business. Additionally, if you have any questions about the test, health issues or any other concerns, feel free to ask a crew member, or contact CVSan at (510) 537-0757.

Your presence is not required during the tests, and all public safety authorities have been notified of this event. We would appreciate it if you would mention this notice to your neighbors in case they have not received a notice.

Additional information may be found on CVSan's website: http://www.cvsan.org/

Thank you for your cooperation.

ATTACHMENT C

Draft Smoke Testing Door Hanger Notice

Notice of Smoke Testing

The Castro Valley Sanitary District will be testing sewer lines in your area from 8:00 am to 3:00 pm on

xx-xx-2015 through xx-xx-2015

The Castro Valley Sanitary District (CVSan) will be doing smoke testing to the sanitary sewer lines in your area. These tests involve blowing harmless smoke into parts of the sewer system to find damage, improper connections, and where unwanted water may be entering CVSan's sewer system. As a result, smoke may be seen coming from roof vents, building foundations, catch basins, clean-outs, down spouts, sewer laterals or manhole covers. The smoke will not enter your home or business if it is properly plumbed, vented, and the water traps contain water.

Caution to residents:
Water can evaporate from unused plumbing fixtures. If you have a bathroom or plumbing fixture that is not used or is seldom used, traps should be filled by running water in the fixtures the day before scheduled smoke testing and on a monthly basis thereafter in order to prevent sewer gas from entering the home or office.

The smoke used is a non-toxic substance that is harmless to humans, pets, food, and material items. If smoke does enter the building, it will clear in a few minutes with proper ventilation. Please advise a representative of the smoke testing crew if any leakage occurs in your home or business. Additionally, if you have any questions about the test, health issues or any other concerns, feel free to ask a crew member, or contact CVSan at (510) 537-0757.

Your presence is not required during the tests, and all public safety authorities have been notified of this event. We would appreciate it if you would mention this notice to your neighbors in case they have not received a notice.

Additional information may be found on CVSan's website: http://www.cvsan.org/

Thank you for your cooperation.

ATTACHMENT D

SFE Global California Standard Safety Manual

Table of Contents

SECTION **Safety Manual**

1. Company Safety Policy and Assignment of Responsibilities
2. Hazard Assessment
3. a. Safe Work Practices
   b. Job Procedures
4. Rules
5. Personal Protective Equipment
6. Maintenance Program
7. Training and Safety Meetings
8. Inspections
9. Incident Investigations
10. Emergency Preparedness
11. Records and statistics
12. Waste management and environment
13. Miscellaneous

Appendices

APPENDIX G

2012 Smoke Testing Defects

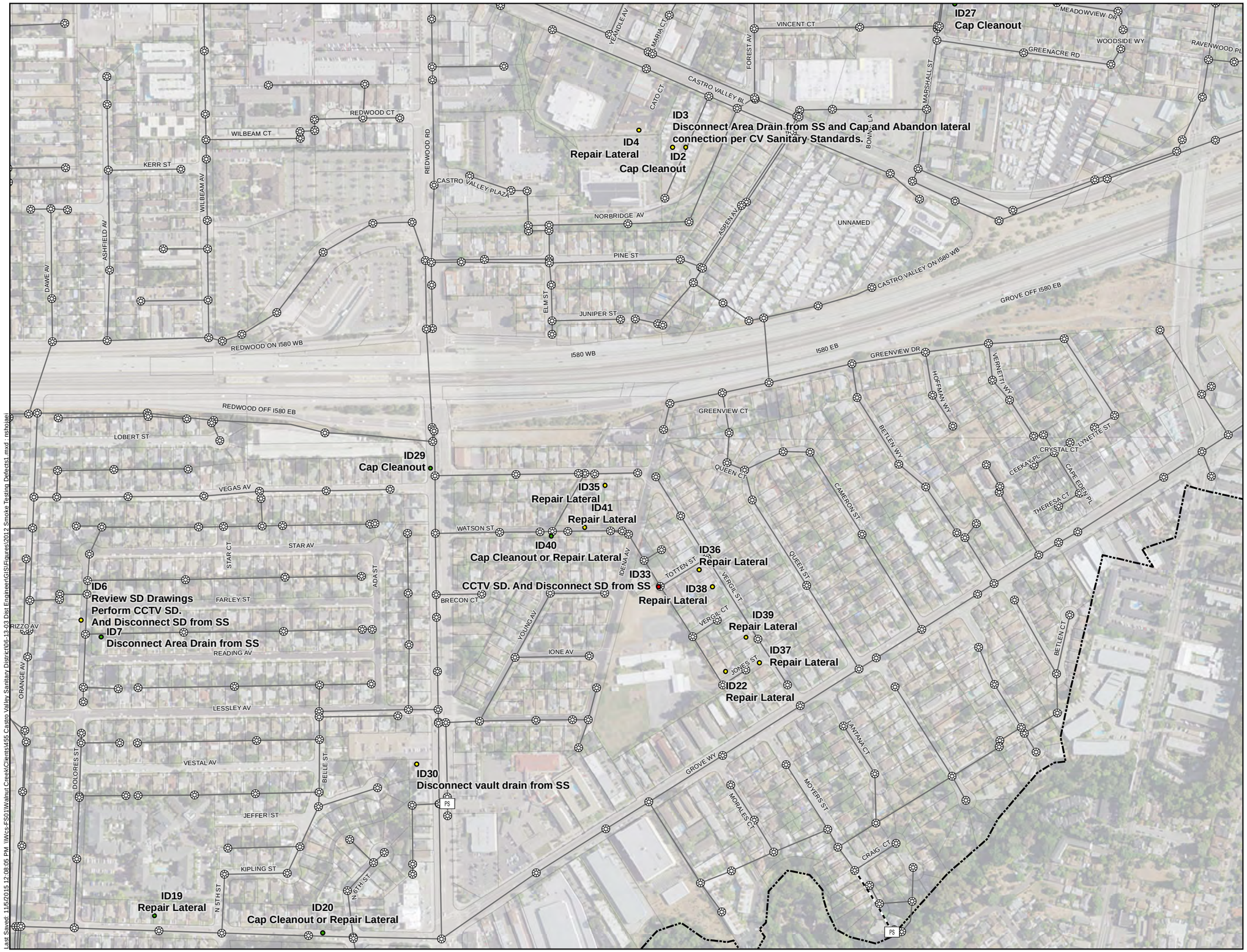

Symbology

2012 Smoke Testing Defects

- Light
- Moderate
- Severe
- Manhole
- Pump Station
- Force Main
- Gravity Main
- District Boundary

Figure 1

2012 Smoke Testing Defects

Castro Valley Sanitary District
Wastewater Collection System
Master Plan Update

Last Saved: 11/5/2015 12:08:05 PM \\Wcs-FS01\Walnut Creek\Clients\455 Castro Valley Sanitary District\06-13-03 Dist Engineer\GIS\Figures\2012 Smoke Testing Defects1.mxd rshojaei

Symbology

2012 Smoke Testing Defects

- Light
- Moderate
- Severe
- Manhole
- Pump Station
- Force Main
- Gravity Main
- District Boundary

Figure 2

2012 Smoke Testing Defects

Castro Valley Sanitary District
Wastewater Collection System
Master Plan Update

Last Saved: 11/5/2015 12:24:26 PM \\Wcs-FS01\Walnut Creek\Clients\458 Castro Valley Sanitary District\06-13-03 Dist Engineer\GIS\Figures\2012 Smoke Testing Defects2.mxd nshojaei

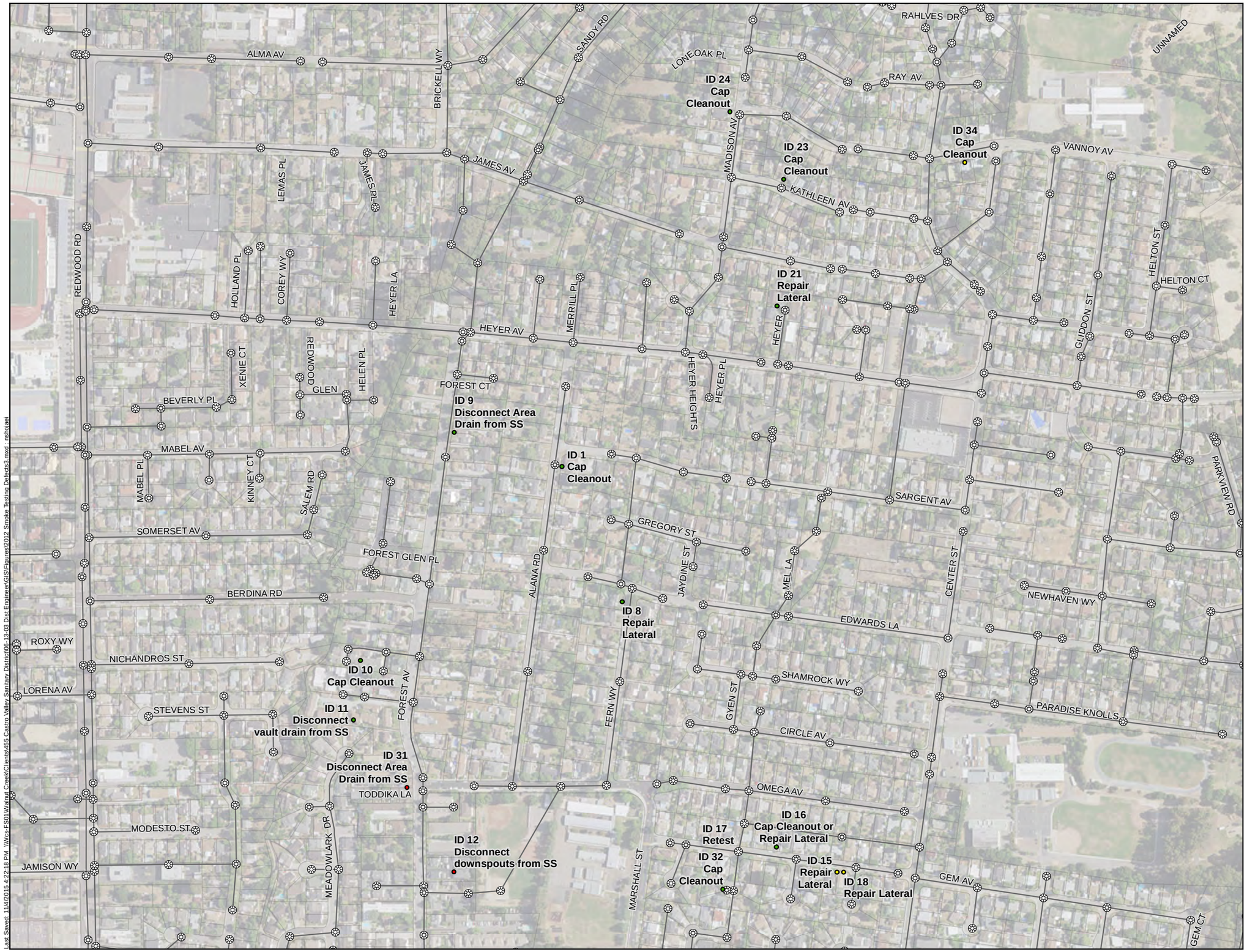

Symbology

2012 Smoke Testing Defects

- Light
- Moderate
- Severe
- Manhole
- Pump Station
- Force Main
- Gravity Main
- District Boundary

Figure 3

2012 Smoke Testing Defects

Castro Valley Sanitary District
Wastewater Collection System
Master Plan Update

Last Saved: 11/4/2015 4:22:18 PM \\Wcs-FS01\Walnut Creek\Clients\455 Castro Valley Sanitary District\06-13-03 Dist Engineer\GIS\Figures\2012 Smoke Testing Defects3.mxd - nshojaei

N

0 100 200

Feet

Symbology

2012 Smoke Testing Defects

- Light
- Moderate
- Severe
- Manhole
- Pump Station
- Force Main
- Gravity Main
- District Boundary

Figure 4

2012 Smoke Testing Defects

Castro Valley Sanitary District
Wastewater Collection System
Master Plan Update

Last Saved: 11/4/2015 4:42:25 PM \\Wcs-FS01\Walnut Creek\Clients\455 Castro Valley Sanitary District\06-13-03 Dist Engineer\GIS\Figures\2012 Smoke Testing Defects4.mxd - nshojaei

Table 1. 2012 Smoke Testing Defects

ID	Longitude	Latitude	Address	Return type	Severity	Apx B Page No	MH	Notes	Ownership	Recommendation	SFE Scope
1.00	-122.07	37.70	19532 Alana Road	Cleanout	Light	86.00	1331.00	Smoke from cleanout with cap missing in front of house on Alana Road.	Private	Cap Cleanout	Confirm
2.00	-122.07	37.69	3765 Castro Valley Boulevard	Cleanout	Moderate	68.00	1417.00	Smoke from cleanout with cap missing at the Tra-Tel Trailer Park on Castro Valley Boulevard.	Private	Cap Cleanout	Confirm
3.00	-122.07	37.69	3765 Castro Valley Boulevard	Area Drain	Moderate	13.00	1417.00	Smoke coming out of multiple area drains and old bathroom lines at the Tra-Tel Trailer Park on Castro Valley Boulevard.	Private	Disconnect Area Drain from SS and Cap and Abandon lateral connection per CV Sanitary Standards.	Smoke Test
4.00	-122.07	37.69	20999 Cato Court	Ground Surface	Moderate	30.00	1418.00	Ground surface smoke behind building at the back of Cato Court.	Private	Repair Lateral	
5.00	-122.07	37.70	4117 David Street	Cleanout	Light	82.00	1388.00	Smoke from cleanout with cap missing in front of house on David Street.	Private	Cap Cleanout	Confirm
6.00	-122.08	37.69	21635 Dolores Street	Storm Drain	Moderate	10.00	2950.00	Smoke coming out of storm drain located on Dolores Street, near intersection with Farley Street.	Public- County Flood Control	Review SD Drawings, Perform CCTV SD. And Disconnect SD from SS	Smoke Test
7.00	-122.08	37.69	21654 Dolores Street	Area Drain	Light	17.00	2951.00	Smoke coming out of area drain in backyard of house on Dolores Avenue.	Private	Disconnect Area Drain from SS	Confirm
8.00	-122.07	37.70	19603 Fern Way	Foundation	Light	63.00	1352.00	Foundation smoke from underneath house on Fern Way.	Private	Repair Lateral	
9.00	-122.07	37.70	19610 Forest Avenue	Area Drain	Light	19.00	2668.00	Smoke coming out of area drain in front yard of house on Forest Avenue.	Private	Disconnect Area Drain from SS	Smoke Test
10.00	-122.07	37.70	19897 Forest Avenue	Cleanout	Light	72.00	1358.00	Smoke from cleanout with missing cap in condo complex on Forest Avenue.	Private	Cap Cleanout	Confirm
11.00	-122.07	37.70	19983 Forest Avenue	Vault/Valve	Light	27.00	3324.00	Smoke coming out of valve vault marked water, next to parking lot in housing complex on Forest Avenue.	Public- EBMUD	Disconnect vault drain from SS	
12.00	-122.07	37.70	20228 Forest Avenue	Roof Leader	Severe	22.00	1362.00	Smoke from downspouts of multiple buildings on parcel.	Private	Disconnect downspouts from SS	Confirm
13.00	-122.07	37.70	20551 Forest Avenue	Area Drain	Moderate	15.00	3351.00	Smoke coming out of area drain at condo complex off of Forest Avenue.	Private	Disconnect Area Drain from SS	Smoke Test
14.00	-122.07	37.70	20551 Forest Avenue	Ground Surface	Moderate	52.00	3351.00	Ground surface smoke from curb in front of house on Forest Avenue.	Private	Repair Lateral	
15.00	-122.06	37.70	4277 Gem Avenue	Ground Surface	Moderate	34.00	1843.00	Ground surface smoke from lawn on Gem Avenue.	Private	Repair Lateral	
16.00	-122.06	37.70	4250 Gem Avenue	Ground Surface	Light	54.00	1371.00	Probably a cleanout. Ground surface smoke from planter box of house on Gem Avenue.	Private	Cap Cleanout or Repair Lateral	Confirm
17.00	-122.06	37.70	4225 Gem Avenue	Other	N/A	89.00	1349.00	No smoke coming out of 3-4 houses on Gem Avenue.		Retest	Smoke Test
18.00	-122.06	37.70	20019 Gem Avenue	Ground Surface	Moderate	36.00	1848.00	Ground surface smoke from joint in lawn / driveway on Gem Avenue.	Private	Repair Lateral	
19.00	-122.08	37.68	2180 Grove Way	Ground Surface	Light	60.00	1018.00	Ground surface smoke from lawn in front of house on Grove Way.	Private	Repair Lateral	
20.00	-122.08	37.68	2264 Grove Way	Ground Surface	Light	58.00	1020.00	Ground surface smoke from below grade on edge of sidewalk and outside edge of vault, by lawn in front of house on Grove Way	Private	Cap Cleanout or Repair Lateral	Confirm
21.00	-122.06	37.70	4662 Heyer Avenue	Foundation	Light	65.00	1777.00	Foundation smoke from underneath house on Heyer Avenue.	Private	Repair Lateral	
22.00	-122.07	37.69	2664 & 2670 Jones Street	Ground Surface	Moderate	44.00	1508.00	Ground surface smoke from grass lawn between the houses 2664 and 2670 Jones Street.	Private	Repair Lateral	
23.00	-122.06	37.71	4828 Kathleen Avenue	Cleanout	Light	78.00	1734.00	Smoke from cleanout in front of house on Kathleen Avenue.	Private	Cap Cleanout	Confirm
24.00	-122.06	37.71	18937 Madison Avenue	Cleanout	Light	76.00	1245.00	Smoke from cleanout with cover and cap missing, just behind gate of house on Madison Avenue.	Private	Cap Cleanout	Confirm
25.00	-122.10	37.72	17108 Mayflower Drive	Ground Surface	Moderate	50.00	3122.00	Ground surface smoke from sidewalk on Mayflower Drive, just uphill from smoke return at storm drain.	Public	Review SD Drawings to Confirm Lateral or Storm Drain	Smoke Test
26.00	-122.10	37.72	17214 Mayflower Drive	Storm Drain	Severe	8.00	125.00	Smoke coming out of storm drain located on Mayflower Drive hill, just up from September Court.	Public- County Flood Control	Review SD Drawings, Perform CCTV SD. And Disconnect SD from SS	Smoke Test
27.00	-122.07	37.70	4003 Meadowview Drive	Cleanout	Light	74.00	1393.00	Smoke from cleanout with missing cap in front of house on Meadowview Drive.	Private	Cap Cleanout	Confirm
28.00	-122.07	37.70	4004 Meadowview Drive	Storm Drain	Severe	2.00	1393.00	Smoke coming out of storm drain located at the intersection of Marshal Street and Meadowview Drive.	Public- County Flood Control	CCTV SD. And Disconnect SD from SS	Smoke Test
29.00	-122.07	37.69	21675 Redwood Road	Cleanout	Light	80.00	1067.00	Smoke from cleanout with cap missing in front of eye center on Redwood Avenue.	Private	Cap Cleanout	Confirm
30.00	-122.07	37.69	22151 Redwood Road	Vault/Valve	Moderate	25.00	3065.00	Smoke coming out of EBMUD Vault behind building on Redwood Boulevard.	Public- EBMUD	Disconnect vault drain from SS	
31.00	-122.07	37.70	4131 Toddika Lane	Storm Drain	Severe	6.00	2656.00	Smoke coming out of storm drain located on Toddika Lane, along the entrance to the apartment complex. Probably a direct connection.	Private	Disconnect Area Drain from SS	Smoke Test
32.00	-122.06	37.70	20057 Topaz Court	Cleanout	Light	84.00	3353.00	Smoke from cleanout with cap missing in front of house on Topaz Court.	Private	Cap Cleanout	Confirm
33.00	-122.07	37.69	2662 Totten Street	Storm Drain	Severe	4.00	1511.00	Smoke coming out of storm drain located on the right side of the end of Totten Street.	Public- County Flood Control	CCTV SD. And Disconnect SD from SS	Smoke Test
34.00	-122.06	37.71	5027 Vannoy Avenue	Cleanout	Moderate	70.00	3395.00	Smoke from cleanout with cover and cap missing in front of house on Vannoy Avenue.	Private	Cap Cleanout	Confirm
35.00	-122.07	37.69	2681 Vegas Avenue	Ground Surface	Moderate	38.00	2511.00	Ground surface smoke from rock landscaping on side of house on Vegas Avenue.	Private	Repair Lateral	
36.00	-122.07	37.69	22049 Vergil Street	Ground Surface	Moderate	40.00	1506.00	Ground surface smoke from gravel near side yard fence of house on Vergil Street.	Private	Repair Lateral	
37.00	-122.07	37.69	22089 Vergil Street	Ground Surface	Moderate	46.00	3364.00	Ground surface smoke from right corner of front yard (when facing house) of house on Vergil Street.	Private	Repair Lateral	
38.00	-122.07	37.69	22053 & 22057 Vergil Street	Ground Surface	Moderate	42.00	3365.00	Ground surface smoke from side yard area between houses 22053 and 22057 Vergil Street.	Private	Repair Lateral	
39.00	-122.07	37.69	22073 & 22077 Vergil Street	Ground Surface	Moderate	48.00	1507.00	Ground surface smoke from side yard area between 22073 and 22077 Vergil Street	Private	Repair Lateral	
40.00	-122.07	37.69	2655 Watson Street	Ground Surface	Light	56.00	1515.00	Ground surface smoke from under planting pot/barrel of house on Watson Street, probably a cleanout.	Private	Cap Cleanout or Repair Lateral	Confirm
41.00	-122.07	37.69	2678 Watson Street	Ground Surface	Moderate	32.00	1514.00	Ground surface smoke from house lateral on Watson Street.	Private	Repair Lateral	

WEST YOST ASSOCIATES

(THIS PAGE INTENTIONALLY LEFT BLANK)

APPENDIX Q

Performance Metrics and Evaluation

Appendix Q - Annual Report

Maintenance Data

1. Maintenance

Activity	January 2010		February 2010		March 2010		April 2010		May 2010		June 2010		July 2010		August 2010		September 2010		October 2010		November 2010		December 2010	
	Scheduled (PM)	Unscheduled (UM)	Scheduled (PM)	Unscheduled (UM)	Scheduled (PM)	Unscheduled (UM)	Scheduled (PM)	Unscheduled (UM)	Scheduled (PM)	Unscheduled (UM)	Scheduled (PM)	Unscheduled (UM)	Scheduled (PM)	Unscheduled (UM)	Scheduled (PM)	Unscheduled (UM)	Scheduled (PM)	Unscheduled (UM)	Scheduled (PM)	Unscheduled (UM)	Scheduled (PM)	Unscheduled (UM)	Scheduled (PM)	Unscheduled (UM)
Machine Rodding (MR)	936	0	2,930	132	0	0	1,478	0	536	0	300	0	701	0	0	0	0	0	993	0	0	0	0	0
Hydro Flushing (HF)	13,219	1,860	6,862	2,253	24,161	2,960	21,468	1,089	19,578	2,601	22,913	5,129	21,943	3,299	11,644	2,749	11,060	2,310	7,900	1,834	22,534	1,870	1,711	4,352
Hydro Root-Saw (HRS)	9,896	411	15,437	4,557	1,912	1,326	7,386	980	6,985	1,553	1,455	2,472	11,938	575	15,485	1,165	4,956	1,837	9,301	3,761	0	152	997	289
Chemical Root Treatmen (CRT)	0	0	0	0	0	0	0	0	0	0	9,800	0	27,607	0	926	0	0	0	0	0	0	0	0	0
Video Inspection (CCTV)	12,120	1,622	7,671	261	23,175	978	16,519	1,188	12,879	2,239	11,692	1,365	0	0	1,364	0	4,076	6,978	9,265	2,724	13,672	1,086	0	0
Other	0	0	0	0	0	0	0	0	0	0	0	0	0	0	0	0	0	0	0	0	0	0	0	0
Total	**36,171**	**3,896**	**32,900**	**7,203**	**49,248**	**5,264**	**46,851**	**3,257**	**39,978**	**6,393**	**46,160**	**8,966**	**62,189**	**3,874**	**29,419**	**3,914**	**20,092**	**11,125**	**27,459**	**8,319**	**36,206**	**3,108**	**2,708**	**4,641**

Activity	January 2011		February 2011		March 2011		April 2011		May 2011		June 2011		July 2011		August 2011		September 2011		October 2011		November 2011		December 2011	
	Scheduled (PM)	Unscheduled (UM)	Scheduled (PM)	Unscheduled (UM)	Scheduled (PM)	Unscheduled (UM)	Scheduled (PM)	Unscheduled (UM)	Scheduled (PM)	Unscheduled (UM)	Scheduled (PM)	Unscheduled (UM)	Scheduled (PM)	Unscheduled (UM)	Scheduled (PM)	Unscheduled (UM)	Scheduled (PM)	Unscheduled (UM)	Scheduled (PM)	Unscheduled (UM)	Scheduled (PM)	Unscheduled (UM)	Scheduled (PM)	Unscheduled (UM)
Machine Rodding (MR)	0	0		263	0	0	976	664	2,792	0	3,491	145	0	0	0	0	0	0	0	0	1,858	0	0	0
Hydro Flushing (HF)	11,135	943	15,252	1,890	19,700	7,158	10,464	16,567	15,883	6,726	12,394	2,881	21,177	1,284	20,226	1,760	14,395	792	11,128	1,094	17,383	6,387	15,349	1,343
Hydro Root-Saw (HRS)	16,205	840	4,221	6,407	525	2,363	4,076	0	3,868	1,006	16,885	574	10,146	1,209	7,435	1,215	3,100	1,699	3,796	683	1,589	357	3,794	550
Chemical Root Treatmen (CRT)	0	0	0	0	0	0	0	0	10,680	0	14,700	0	0	0	0	0	0	0	0	0	0	0	0	0
Video Inspection (CCTV)	0	0	7,370	2,357	15,951	1,793	18,429	3,434	11,577	2,860	11,407	1,866	12,701	315	16,590	573	8,034	353	3,753	0	15,229	3,141	754	550
Other	0	0	0	0	0	0	0	0	0	0	0	0	0	0	0	0	0	0	0	0	0	0	0	0
Total	**27,340**	**1,783**	**26,843**	**10,917**	**36,176**	**11,314**	**33,945**	**20,665**	**44,800**	**10,592**	**58,877**	**5,466**	**44,024**	**2,808**	**44,251**	**3,548**	**25,529**	**2,844**	**18,677**	**1,777**	**36,059**	**9,885**	**19,897**	**2,443**

Activity	January		February		March 2012		April 2012		May 2012		June 2012		July 2012		August 2012		September		October		November		December	
	Scheduled (PM)	Unscheduled (UM)	Scheduled (PM)	Unscheduled (UM)	Scheduled (PM)	Unscheduled (UM)	Scheduled (PM)	Unscheduled (UM)	Scheduled (PM)	Unscheduled (UM)	Scheduled (PM)	Unscheduled (UM)	Scheduled (PM)	Unscheduled (UM)	Scheduled (PM)	Unscheduled (UM)	Scheduled (PM)	Unscheduled (UM)	Scheduled (PM)	Unscheduled (UM)	Scheduled (PM)	Unscheduled (UM)	Scheduled (PM)	Unscheduled (UM)
Machine Rodding (MR)	1722	2318	0	0	1,319	0	302	0	1,533	0	0	0	1776	0	958	128	1,429	0	540	0	1,047	0	0	113
Hydro Flushing (HF)	19,057	1825	17,934	15,456	3,591	8,931	24,904	1,449	16,345	8,448	22,161	6,526	14583	7853	8,671	4,867	7,380	570	11,271	2,490	22,263	3,794	27,267	865
Hydro Root-Saw (HRS)	19,325	446	6,263	1,323	8,466	1,369	8,436	0	4,069	811	4,274	925	8297	913	3,361	280	2,809	667	7,830	706	2,119	253	6,849	944
Chemical Root Treatmen (CRT)	0	0	0	0	0	0	0	0	0	0	0	0	34819	0	0	0	0	0	0	0	0	0	0	0
Video Inspection (CCTV)	0	120	17,443	0	0	9,194	159	1,078	2,965	3,827	3,788	2,996	7401	629	1,368	3,053	4,212	0	3,320	4,498	0	0	0	0
Other	0	0	0	0	0	0	0	0	0	0	0	0	0	850	0	0	0	0	0	0	0	0	0	0
Total	**40,104**	**4,709**	**41,640**	**16,779**	**13,376**	**19,494**	**33,801**	**2,527**	**24,912**	**13,086**	**30,223**	**10,447**	**66,876**	**10,245**	**14,358**	**8,328**	**15,830**	**1,237**	**22,961**	**7,694**	**25,429**	**4,047**	**34,116**	**1,922**

Activity	January		February		March 2013		April 2013		May 2013		June 2013		July 2013		August 2013		September		October		November		December	
	Scheduled (PM)	Unscheduled (UM)	Scheduled (PM)	Unscheduled (UM)	Scheduled (PM)	Unscheduled (UM)	Scheduled (PM)	Unscheduled (UM)	Scheduled (PM)	Unscheduled (UM)	Scheduled (PM)	Unscheduled (UM)	Scheduled (PM)	Unscheduled (UM)	Scheduled (PM)	Unscheduled (UM)	Scheduled (PM)	Unscheduled (UM)	Scheduled (PM)	Unscheduled (UM)	Scheduled (PM)	Unscheduled (UM)	Scheduled (PM)	Unscheduled (UM)
Machine Rodding (MR)	22,222	1,253	469	0	1,773	0	367	0	28,695	0	0	0	8,157	0	0	315	0	0	528	181	808	907	7,458	544
Hydro Flushing (HF)	23912	1,102	40,028	2,448	32,734	382	41,690	1,235	32,873	719	44,952	1,164	26,749	0	28,659	700	29,713	2,097	14,905	1,382	4,837	2,275	21,807	1,589
Hydro Root-Saw (HRS)	936	0	4,382	0	15,436	925	11,258	622	15,832	0	5,289	1,560	7,045	0	2,112	805	5,036	2,198	10,752	2,863	2,401	0	5,447	118
Chemical Root Treatmen (CRT)	0	0	0	0	0	0	0	0	0	0	0	0	30,694	0	0	0	0	0	0	0	0	0	0	0
Video Inspection (CCTV)	0	0	0	0	0	0	0	0	0	0	0	696	0	2,648	0	393	4,043	687	10,220	2,129	6,273	1,413	5,399	989
Other	0	0	0	0	0	0	0	0	0	0	0	471	0	0	0	0	0	0	0	0	0	0	0	0
Total	**44,070**	**2,355**	**44,879**	**2,448**	**49,943**	**1,307**	**53,315**	**1,857**	**77,400**	**719**	**50,241**	**3,420**	**72,645**	**2,648**	**30,771**	**2,213**	**38,792**	**4,985**	**36,405**	**6,555**	**14,319**	**4,595**	**40,111**	**3,240**

Activity	January		February		March 2014		April 2014		May 2014		June 2014		July 2014		August 2014		September		October		November		December	
	Scheduled (PM)	Unscheduled (UM)	Scheduled (PM)	Unscheduled (UM)	Scheduled (PM)	Unscheduled (UM)	Scheduled (PM)	Unscheduled (UM)	Scheduled (PM)	Unscheduled (UM)	Scheduled (PM)	Unscheduled (UM)	Scheduled (PM)	Unscheduled (UM)	Scheduled (PM)	Unscheduled (UM)	Scheduled (PM)	Unscheduled (UM)	Scheduled (PM)	Unscheduled (UM)	Scheduled (PM)	Unscheduled (UM)	Scheduled (PM)	Unscheduled (UM)
Machine Rodding (MR)	508	0	2,604	1,612	3,946	1,585	3,499	205	2,771	0	4,426	1,078	9,702	841	3,791	925	10,996	2,041	13,348	711	4,832	0	2,016	0
Hydro Flushing (HF)	34,767	856	34,315	4,176	6,162	6,611	28,037	6,278	34,737	3,637	35,023	4,040	20,965	2,750	20,626	3,296	20,720	4,005	37,947	2,276	23,515	1,925	7,195	2,406
Hydro Root-Saw (HRS)	13,021	150	5,041	107	14,384	2,140	8,582	2,331	7,877	654	4,177	1,525	3,970	381	791	0	1,978	986	1,215	0	1,998	286	5,203	0
Chemical Root Treatmen (CRT)	0	0	0	0	0	0	0	0	0	0	0	0	0	0	0	0	0	0	0	0	0	0	0	0
Video Inspection (CCTV)	7,884	0	12,137	5,868	17,222	1,867	20,288	483	18,803	757	17,171	615	9,964	1,188	1,093	9,637	3,602	5,997	15,767	265	13,343	286	2,854	574
Other	0	0	0	0	0	0	0	0	0	0	0	0	0	0	0	0	0	0	0	0	0	0	0	0
Total	**56,180**	**1,006**	**54,097**	**11,763**	**41,714**	**12,203**	**60,406**	**9,297**	**64,188**	**5,048**	**60,797**	**7,258**	**44,601**	**5,160**	**26,301**	**13,858**	**37,296**	**13,029**	**68,277**	**3,252**	**43,688**	**2,497**	**17,268**	**2,980**

Appendix Q - Annual Report

Maintenance Data

Activity	January		February		March 2015		April 2015		May 2015		June 2015		July 2015		August 2015		September		October		November		December	
	Scheduled (PM)	Unscheduled (UM)	Scheduled (PM)	Unscheduled (UM)	Scheduled (PM)	Unscheduled (UM)	Scheduled (PM)	Unscheduled (UM)	Scheduled (PM)	Unscheduled (UM)	Scheduled (PM)	Unscheduled (UM)	Scheduled (PM)	Unscheduled (UM)	Scheduled (PM)	Unscheduled (UM)	Scheduled (PM)	Unscheduled (UM)	Scheduled (PM)	Unscheduled (UM)	Scheduled (PM)	Unscheduled (UM)	Scheduled (PM)	Unscheduled (UM)
Machine Rodding (MR)	6,017	0	13,576	638	12,456	781	938	475	0	0	0	0	0	230	14,402	0	4,265	0	25.107	1,090	15,865	459	0	230
Hydro Flushing (HF)	20,446	1,367	11,684	5,582	18,048	4,699	22,930	6,717	23,133	14,797	43,805	8,070	53,447	9,846	27.978	2,247	34,413	6,519	0	646	37,078	1,060	12,201	3,258
Hydro Root-Saw (HRS)	1,450	0	3,544	0	2,259	797	0	707	2,994	1,877	4,262	1,377	0	621	11,434	0	2,288	887	36,624	376	7,788	510	7,567	245
Chemical Root Treatmen (CRT)	0	0	0	0	0	0	0	0	0	0	0	0	0	0	0	0	0	0	0	0	0	0	0	0
Video Inspection (CCTV)	6,496	1,076	1,900	0	0	7,759	4,497	450	7,675	0	10,038	4,037	7,604	1,640	530	0	4,184	12,352	0	627	0	286	3,322	6,606
Other	0	0	0	0	0	0	0	0	0	0	0	0	0	0	0	0	0	0	0	0	0	0	0	0
Total	**34,859**	**2,443**	**30,704**	**6,220**	**32,763**	**14,036**	**28,365**	**8,349**	**33,802**	**16,674**	**58,105**	**13,484**	**61,051**	**12,337**	**54,344**	**2,247**	**45,150**	**19,758**	**61,731**	**2,739**	**60,731**	**2,315**	**23,090**	**10,339**

Activity	January 2016		February 2016		March 2016		April 2016		May 2016		June 2016		July 2016		August 2016		September 2016		October 2016		November 2016		December 2016	
	Scheduled (PM)	Unscheduled (UM)	Scheduled (PM)	Unscheduled (UM)	Scheduled (PM)	Unscheduled (UM)	Scheduled (PM)	Unscheduled (UM)	Scheduled (PM)	Unscheduled (UM)	Scheduled (PM)	Unscheduled (UM)	Scheduled (PM)	Unscheduled (UM)	Scheduled (PM)	Unscheduled (UM)	Scheduled (PM)	Unscheduled (UM)	Scheduled (PM)	Unscheduled (UM)	Scheduled (PM)	Unscheduled (UM)	Scheduled (PM)	Unscheduled (UM)
Machine Rodding (MR)	0	0	0	1249	9,287	2386	0	0	0	1010	4409	964	4503	0	0	0	0	0	0	0	0	0	0	0
Hydro Flushing (HF)	33,303	10,801	32,121	3,409	24,126	9,750	38,151	6,353	41,470	8,639	2,833	2,364	21,650	5,624	33,239	2,377	15,567	2,513	24,773	4,767	6,117	8,385	10,293	1,765
Hydro Root-Saw (HRS)	123	2021	6,239	358	21,786	548	0	2322	0	517	11,023	0	1212	0	12,057	0	30,006	0	7,280	0	23,774	102	29,752	0
Chemical Root Treatmen (CRT)	0	0	0	0	0	0	0	0	0	0	0	0	0	0	0	0	75,581	0	4,441	294	0	0	0	0
Video Inspection (CCTV)	5462	2,605	13,888	118	6751	2,140	11,565	0	8,105	630	4,328	6,256	6,148	0	6739	264	2,877	0	4,441	294	5283	1567	2,825	0
Other	0	0	0	0	0	0	0	0	0	0	0	0	0	0	0	0	0	0	0	0	0	0	0	0
Total	**38,922**	**15,427**	**52,248**	**5,134**	**61,950**	**14,824**	**49,716**	**8,675**	**49,575**	**10,887**	**22,593**	**9,584**	**33,513**	**5,624**	**52,035**	**2,641**	**124,031**	**2,513**	**36,494**	**5,061**	**35,174**	**10,054**	**42,870**	**1,765**

Activity	January 2017		February 2017		March 2017		April 2017		May 2017		June 2017		July 2017		August 2017		September 2017		October 2017		November 2017		December 2017	
	Scheduled (PM)	Unscheduled (UM)	Scheduled (PM)	Unscheduled (UM)	Scheduled (PM)	Unscheduled (UM)	Scheduled (PM)	Unscheduled (UM)	Scheduled (PM)	Unscheduled (UM)	Scheduled (PM)	Unscheduled (UM)	Scheduled (PM)	Unscheduled (UM)	Scheduled (PM)	Unscheduled (UM)	Scheduled (PM)	Unscheduled (UM)	Scheduled (PM)	Unscheduled (UM)	Scheduled (PM)	Unscheduled (UM)	Scheduled (PM)	Unscheduled (UM)
Machine Rodding (MR)	0	0	0	0	0	0	0	0	0	0	0	0	0	0	0	0	0	0	0	0	0	0	0	0
Hydro Flushing (HF)	15,643	3,085	44,478	920	51,402	1,162	36,291	1,429	43,652	0	27,024	8,038	28,002	1,589	30,103	1,248	25,439	2,019	28,149	284	39,782	238	39,259	315
Hydro Root-Saw (HRS)	28,376	342	16,762	1238	4,420	0	15152	1834	5,052	1,413	5,614	323	17850	855	11,974	328	14,766	0	8,779	0	7,562	0	997	550
Chemical Root Treatmen (CRT)	0	0	0	0	0	0	0	0	0	0	0	0	0	0	6056	0	3,513	0	0	0	0	0	0	0
Video Inspection (CCTV)	0	2,003	2,236	662	1297	1,728	6,431	382	6,463	0	3,212	468	4,758	2,170	290	1674	2,135	567	3,104	113	1386	0	1,042	315
Other	**44,109**	**5,430**	**63,476**	**2,820**	**56,939**	**2,890**	**57,874**	**3,645**	**55,167**	**1,413**	**35,850**	**8,829**	**50,610**	**4,614**	**48,423**	**3,250**	**45,853**	**2,586**	**40,032**	**397**	**48,730**	**238**	**41,298**	**1,180**
Total	**34,859**	**2,443**	**30,704**	**6,220**	**32,763**	**14,036**	**28,365**	**8,349**	**33,802**	**16,674**	**58,105**	**13,484**	**61,051**	**12,337**	**54,344**	**2,247**	**45,150**	**19,758**	**61,731**	**2,739**	**60,731**	**2,315**	**23,090**	**10,339**

Activity	January 2018		February 2018		March 2018		April 2018		May 2018		June 2018		July 2018		August 2018		September 2018		October 2018		November 2018		December 2018	
	Scheduled (PM)	Unscheduled (UM)	Scheduled (PM)	Unscheduled (UM)	Scheduled (PM)	Unscheduled (UM)	Scheduled (PM)	Unscheduled (UM)	Scheduled (PM)	Unscheduled (UM)	Scheduled (PM)	Unscheduled (UM)	Scheduled (PM)	Unscheduled (UM)	Scheduled (PM)	Unscheduled (UM)	Scheduled (PM)	Unscheduled (UM)	Scheduled (PM)	Unscheduled (UM)	Scheduled (PM)	Unscheduled (UM)	Scheduled (PM)	Unscheduled (UM)
Machine Rodding (MR)	0	0	0	0	0	0	0	0	0	0	19,254	0	0	0	0	0	0	0	0	0	0	0	0	507
Hydro Flushing (HF)	34,224	0	10,063	1,095	41,244	357	31,239	3,058	38,592	688	3,422	0	29,800	0	23,568	1,118	18,445	3,672	63,102	0	35,461	0	47,619	409
Hydro Root-Saw (HRS)	8,905	366	10,023	0	6,167	200	10,098	1,021	16,311	293	20,181	0	14,610	0	21,739	319	21,299	345	4,729	0	7,541	0	5,658	236
Chemical Root Treatmen (CRT)	0	0	0	0	0	0	0	0	0	0	0	0	0	0	0	0	0	0	0	0	0	0	0	0
Video Inspection (CCTV)	6,574	999	8,561	0	5,161	894	1,354	3,178	2,322	0	0	200	0	0	3,352	0	8,042	0	11,758	0	1,271	0	1,103	2,351
Other	0	0	0	0	0	0	0	0	0	0	0	0	0	0	0	0	0	0	0	0	0	0	0	0
Total	**49,703**	**1,365**	**28,647**	**1,095**	**52,572**	**1,451**	**42,691**	**7,257**	**57,225**	**981**	**42,857**	**200**	**44,410**	**0**	**48,659**	**1,437**	**47,786**	**4,017**	**79,589**	**0**	**44,273**	**0**	**54,380**	**3,503**

Activity	January 2019		February 2019		March 2019		April 2019		May 2019		June 2019		July 2019		August 2019		September 2019		October 2019		November 2019		December 2019	
	Scheduled (PM)	Unscheduled (UM)	Scheduled (PM)	Unscheduled (UM)	Scheduled (PM)	Unscheduled (UM)	Scheduled (PM)	Unscheduled (UM)	Scheduled (PM)	Unscheduled (UM)	Scheduled (PM)	Unscheduled (UM)	Scheduled (PM)	Unscheduled (UM)	Scheduled (PM)	Unscheduled (UM)	Scheduled (PM)	Unscheduled (UM)	Scheduled (PM)	Unscheduled (UM)	Scheduled (PM)	Unscheduled (UM)	Scheduled (PM)	Unscheduled (UM)
Machine Rodding (MR)	0	0	845	0	5,546	0	0	0	0	0	1325	0	99	0	99	0	0	0	0	0	0	0	0	0
Hydro Flushing (HF)	36,421	0	33,700	661	29,533	360	25,671	528	34,514	736	46,682	0	43,095	0	43,095	0	40,646	339	25,375	0	10,981	1,429	30,244	4,298
Hydro Root-Saw (HRS)	9,821	0	7800	0	11,597	0	18859	0	18,877	300	0	0	5785	3260	5785	3260	8,584	975	15,052	583	39,552	2098	9,987	596
Chemical Root Treatmen (CRT)	0	0	0	0	0	0	0	0	0	0	2980	0	0	0	0	0	0	0	0	0	0	0	0	0
Video Inspection (CCTV)	11038	0	11,796	1699	9765	950	12,336	807	14,937	438	10,246	0	9,300	916	9,300	916	10,958	273	6,053	952	0	3674	3,296	6,291
Other	**0**	**0**	**0**	**0**	**0**	**0**	**0**	**0**	**0**	**0**	**0**	**0**	**0**	**0**	**0**	**0**	**0**	**0**	**0**	**0**	**0**	**0**	**0**	**0**
Total	57,280	0	54141	2360	56,441	1310	56866	1335	68328	1474	61233	0	58279	4176	58279	4176	60,188	1587	46,480	1,535	50,533	7201	43527	11185

Appendix Q - Annual Report
Maintenance Totals

Month	2019	2018	2017	2016	Maintenance Totals 2015	2014	2013	2012	2011	2010	2009	2008	2007	2006
January	57,280	51,608	49,449	54,349	37,302	57,186	49,425	44,813	29,123	40,064	14,999	71,491	40,099	57,264
February	56,501	50,057	66,296	57,264	36,924	65,860	47,237	58,419	41,879	40,103	29,749	62,708	49,535	56,055
March	57,751	54,029	59,829	76,774	46,799	53,917	51,250	32,870	47,490	54,512	40,242	40,165	40,656	44,904
April	58,201	49,948	61,519	58,391	36,714	69,703	55,127	36,237	54,610	50,108	44,030	50,873	47,777	53,717
May	69,802	58,206	56,580	60,462	50,476	69,236	78,119	37,998	55,392	46,371	38,880	34,563	61,762	59,129
June	61,233	43,057	44,679	32,177	71,589	68,055	53,661	40,670	64,343	55,126	41,135	38,407	39,131	55,898
July	62,455	44,410	55,224	39,137	73,388	49,761	75,280	77,121	46,832	66,063	59,608	39,610	54,173	24,783
August	62,455	50,096	51,673	54,676	56,591	40,159	32,984	22,686	47,799	33,333	47,745	49,770	61,849	63,575
September	61,775	51,803	48,439	126,544	64,908	50,325	43,774	17,067	28,373	31,217	46,442	99,084	41,733	39,126
October	48,015	79,589	40,429	41,555	64,470	71,529	42,960	30,655	20,454	35,778	71,589	35,867	45,068	59,756
November	57,734	44,329	48,968	45,228	63,046	46,185	18,914	29,476	45,944	39,314	25,501	18,301	51,092	25,282
December	57,644	57,833	42,478	44,635	33,429	20,248	43,351	36,038	22,340	7,349	21,543	14,824	63,640	33,218
Average	59,237	**52,914**	**48,275**	**57,599**	**52,325**	**55,180**	**49,340**	**38,669**	**42,048**	**41,611**	**40,122**	**46,305**	**49,710**	**47,726**

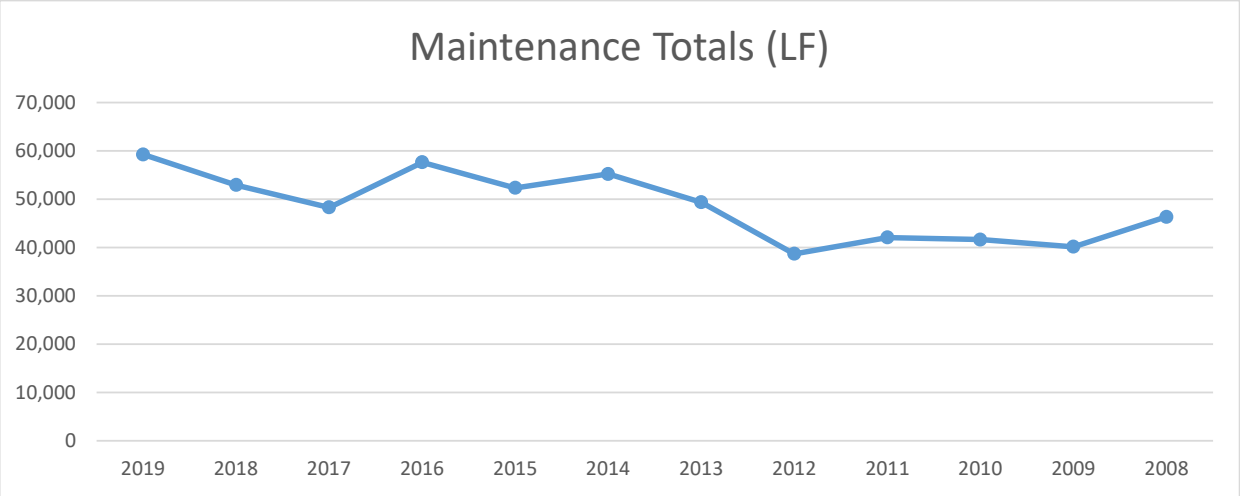

Appendix Q - Annual Report
Service Calls Data

2. Service Calls

Type	January 2008		February 2008		March 2008		April 2008		May 2008		June 2008		July 2008		August 2008		September 2008		October 2008		November 2008		December 2008	
	Business Hours	Non-Business Hours	Business Hours	Non-Business Hours	Business Hours	After-Business Hours	Business Hours	After-Business Hours	Business Hours	After-Business Hours	Business Hours	After-Business Hours	Business Hours	After-Business Hours	Business Hours	After-Business Hours	Business Hours	After-Business Hours	Business Hours	After-Business Hours	Business Hours	After-Business Hours	Business Hours	After-Business Hours
Emergency	5	2	2	0	2	2	0	0	1	2	2	0	1	0	0	1	0	0	4	3	1	1	0	2
Non-Emergency	2	0	0	0	2	0	5	0	1	0	2	1	1	0	2	1	2	0	7	1	1	0	0	0
Total	**7**	**2**	**2**	**0**	**4**	**2**	**5**	**0**	**2**	**2**	**4**	**1**	**2**	**0**	**2**	**2**	**2**	**0**	**11**	**4**	**2**	**1**	**0**	**2**
Avg. Response Time (Min)	**18.29**	**27**	**7.5**	**--**	**30.5**	**27**	**41.4**	**0**	**22.5**	**21.5**	**60.0**	**next day**	**20**		**22.5**	**27**	**10**	**---**	**44.82**	**18.33**	**15**	**30**		**25**

Type	January 2009		February 2009		March 2009		April 2009		May 2009		June 2009		July 2009		August 2009		September 2009		October 2009		November 2009		December 2009	
	Business Hours	Non-Business Hours	Business Hours	Non-Business Hours	Business Hours	After-Business Hours	Business Hours	After-Business Hours	Business Hours	After-Business Hours	Business Hours	After-Business Hours	Business Hours	After-Business Hours	Business Hours	After-Business Hours	Business Hours	After-Business Hours	Business Hours	After-Business Hours	Business Hours	After-Business Hours	Business Hours	After-Business Hours
Emergency	2	0	5	3	1	0	3	1	0	0	1	1	0	0	0	0	0	1	4	3	3	3	3	3
Non-Emergency	0	0	1	0	4	0	3	1	7	1	6	1	3	0	1	0	2	0	2	0	6	1	3	1
Total	**2**	**0**	**4**	**3**	**5**	**0**	**6**	**2**	**7**	**1**	**7**	**2**	**3**	**0**	**1**	**0**	**2**	**1**	**6**	**3**	**9**	**4**	**6**	**4**
Avg. Response Time (Min)	**19.50**	**-**	**19.7**	**24.67**	**20**	**-**	**29.17**	**26**	**30**	**25**	**14.5**	**35**	**15**	**-**	**25**	**0**	**14**	**20**	**28.6**	**19**	**39**	**25**	**35.43**	**22.5**

Type	January 2010		February 2010		March 2010		April 2010		May 2010		June 2010		July 2010		August 2010		September 2010		October 2010		November 2010		December 2010	
	Business Hours	Non-Business Hours	Business Hours	Non-Business Hours	Business Hours	After-Business Hours	Business Hours	After-Business Hours	Business Hours	After-Business Hours	Business Hours	After-Business Hours	Business Hours	After-Business Hours	Business Hours	After-Business Hours	Business Hours	After-Business Hours	Business Hours	After-Business Hours	Business Hours	After-Business Hours	Business Hours	After-Business Hours
Emergency	6	0	1	2	4	0	0	0	1	1	3	1	1	1	0	0	0	1	0	1	0	2	1	2
Non-Emergency	2	2	2	0	5	0	1	0	4	0	5	0	1	0	1	1	2	0	4	1	4	1	4	1
Total	**8**	**2**	**3**	**2**	**9**	**0**	**1**	**0**	**5**	**1**	**8**	**1**	**2**	**1**	**1**	**1**	**2**	**1**	**4**	**2**	**4**	**3**	**5**	**3**
Avg. Response Time (Min)	**15**	**Next day**	**40**	**19**	**17**	**-**	**35.00**	**-**	**11.6**	**24**	**21**	**20**	**10**	**30**	**35**	**29**	**169**	**5**	**43**	**27.5**	**27**	**18**	**10**	**15**

Type	January 2011		February 2011		March 2011		April 2011		May 2011		June 2011		July 2011		August 2011		September 2011		October 2011		November 2011		December 2011	
	Business Hours	Non-Business Hours	Business Hours	Non-Business Hours	Business Hours	After-Business Hours	Business Hours	After-Business Hours	Business Hours	After-Business Hours	Business Hours	After-Business Hours	Business Hours	After-Business Hours	Business Hours	After-Business Hours	Business Hours	After-Business Hours	Business Hours	After-Business Hours	Business Hours	After-Business Hours	Business Hours	After-Business Hours
Emergency	0	1	2	0	1	1	0	3	1	2	0	0	2	4	0	0	1	0	1	0	0	2	0	2
Non-Emergency	1	0	4	0	2	0	5	0	3	1	4	1	1	0	2	1	2	0	1	0	5	0	3	0
Total	**1**	**1**	**6**	**0**	**3**	**1**	**5**	**3**	**4**	**3**	**4**	**1**	**3**	**4**	**2**	**1**	**3**	**0**	**2**	**0**	**5**	**2**	**3**	**2**
Avg. Response Time (Min)		**26**	**13.4**		**15**	**20**		**21**	**29**	**17**	**30**	**30**	**15**	**48**	**20**		**5**		**4**				**51**	**24**

Type	January 2012		February 2012		March 2012		April 2012		May 2012		June 2012		July 2012		August 2012		September 2012		October 2012		November 2012		December 2012	
	Business Hours	Non-Business Hours	Business Hours	Non-Business Hours	Business Hours	After-Business Hours	Business Hours	After-Business Hours	Business Hours	After-Business Hours	Business Hours	After-Business Hours	Business Hours	After-Business Hours	Business Hours	After-Business Hours	Business Hours	After-Business Hours	Business Hours	After-Business Hours	Business Hours	After-Business Hours	Business Hours	After-Business Hours
Emergency	4	1	0	6	4	7	1	14	1	0	0	0	0	0	1	2	1	0	1	1	0	0	1	0
Non-Emergency	1	0	5	1	5	0	0	1	3	2	2	3	4	0	2	2	3	0	3	3	2	1	3	0
Total	**5**	**1**	**5**	**7**	**9**	**7**	**1**	**15**	**4**	**2**	**2**	**3**	**4**	**0**	**3**	**4**	**4**	**0**	**4**	**4**	**2**	**1**	**4**	**0**
Avg. Response Time (Min)	**23**	**14**	**25**	**19**	**18**	**26**	**32**	**28**	**17.25**	**14**	**13**	**23**	**30**	**N/A**	**7**		**33**	**-**	**36**	**31**	**15**	**30**	**46**	

Type	January 2013		February 2013		March 2013		April 2013		May 2013		June 2013		July 2013		August 2013		September 2013		October 2013		November 2013		December 2013	
	Business Hours	Non-Business Hours	Business Hours	Non-Business Hours	Business Hours	After-Business Hours	Business Hours	After-Business Hours	Business Hours	After-Business Hours	Business Hours	After-Business Hours	Business Hours	After-Business Hours	Business Hours	After-Business Hours	Business Hours	After-Business Hours	Business Hours	After-Business Hours	Business Hours	After-Business Hours	Business Hours	After-Business Hours
Emergency	1	3	0	2	0	0	0	5	1	0	1	1	1	0	1	1	0	2	0	1	1	0	0	0
Non-Emergency	0	2	4	0	2	2	0	2	3	1	4	2	0	0	2	0	1	4	2	1	3	1	0	1
Total	**1**	**5**	4	2	2	2	**0**	**7**	**4**	**1**	**5**	**3**	**1**	**0**	**3**	**1**	**1**	**6**	2	2	4	1	**0**	**1**
Avg. Response Time (Min)	**10**	**42**	**14.25**	**18**		**32**		**31**	**50**	**30**	**29**	**26**	**10**	**0**	**70**	**15**		**22**	**76.5**	**15**	**20**	**15**		**15**

Type	January 2014		February 2014		March 2014		April 2014		May 2014		June 2014		July 2014		August 2014		September 2014		October 2014		November 2014		December 2014	
	Business Hours	Non-Business Hours	Business Hours	Non-Business Hours	Business Hours	After-Business Hours	Business Hours	After-Business Hours	Business Hours	After-Business Hours	Business Hours	After-Business Hours	Business Hours	After-Business Hours	Business Hours	After-Business Hours	Business Hours	After-Business Hours	Business Hours	After-Business Hours	Business Hours	After-Business Hours	Business Hours	After-Business Hours
Emergency	0	1	2	3	2	1	3	0	0	0	0	0	0	3	2	1	0	2	0	2	0	2	1	0
Non-Emergency	0	0	3	1	6	2	6	0	2	0	5	2	2	1	3	2	4	1	3	0	3	0	8	2
Total	**0**	**1**	**5**	**4**	**8**	**3**	**9**	**0**	**2**	**0**	**5**	**2**	**2**	**4**	**5**	**3**	**4**	**3**	**3**	**2**	**3**	**2**	**9**	**2**
Avg. Response Time (Min)	**0**	**38**	**13.8**	**30.5**	**22**	**25**	**20.13**		**10**		**15**	**30**	**18**	**28**	**14**	**45**	**15**	**21**	**32**	**9**	**72**	**19**	**32**	**38**

Type	January 2015		February 2015		March 2015		April 2015		May 2015		June 2015		July 2015		August 2015		September 2015		October 2015		November 2015		December 2015	
	Business Hours	Non-Business Hours	Business Hours	Non-Business Hours	Business Hours	After-Business Hours	Business Hours	After-Business Hours	Business Hours	After-Business Hours	Business Hours	After-Business Hours	Business Hours	After-Business Hours	Business Hours	After-Business Hours	Business Hours	After-Business Hours	Business Hours	After-Business Hours	Business Hours	After-Business Hours	Business Hours	After-Business Hours
Emergency	0	5	2	0	0	1	0	0	0	0	0	0	1	1	0	0	2	1	2	2	0	0	2	0
Non-Emergency	4	0	1	1	5	1	2	0	4	0	2	6	9	2	5	0	6	1	3	1	4	0	3	3
Total	4	5	3	1	5	2	2	0	4	0	**2**	**6**	10	3	**5**	**0**	8	2	5	3	4	0	5	3
Avg. Response Time (Min)	**55**	**30**	**15**	**28**	**35**	**315**	**23**	**0**	**55**	**0**	**21 min**	**62 min**	**28**	**82**	**0**	**53 min**	**29**	**98**	**25**	**48**	**18**	**0**	**19**	**38**

Appendix Q - Annual Report
Service Calls Data

Type	January 2016		February 2016		March 2016		April 2016		May 2016		June 2016		July 2016		August 2016		September 2016		October 2016		November 2016		December 2016	
	Emergency	Non-Emergency	Emergency	Non-Emergency	Emergency	Non-Emergency	Emergency	Non-Emergency	Emergency	Non-Emergency	Emergency	Non-Emergency	Emergency	Non-Emergency	Emergency	Non-Emergency	Emergency	Non-Emergency	Emergency	Non-Emergency	Emergency	Non-Emergency	Emergency	Non-Emergency
Business Hours	0	9	1	5	0	1	0	5	0	3	0	1	0	4	0	6	1	9	0	3	0	3	1	2
After-Business Hours	1	3	0	0	1	0	0	0	1	0	0	2	1	2	0	3	0	2	0	2	0	0	0	0
Total	**1**	**12**	**1**	**5**	**1**	**1**	**0**	**5**	**1**	**3**	**0**	**3**	**1**	**6**	**0**	**9**	**1**	**11**	**0**	**5**	**0**	**3**	**1**	**2**
Avg. Response Time (Min)	**30**	**23**	**13**	**70**	**20**	**105**	**0**	**12**	**30**	**15**	**0**	**20**	**30**	**18**	**0**	**18**	**20**	**14**	**0**	**31**	**0**	**36**	**15**	**28**

Type	January 2017		February 2017		March 2017		April 2017		May 2017		June 2017		July 2017		August 2017		September 2017		October 2017		November 2017		December 2017	
	Emergency	Non-Emergency	Emergency	Non-Emergency	Emergency	Non-Emergency	Emergency	Non-Emergency	Emergency	Non-Emergency	Emergency	Non-Emergency	Emergency	Non-Emergency	Emergency	Non-Emergency	Emergency	Non-Emergency	Emergency	Non-Emergency	Emergency	Non-Emergency	Emergency	Non-Emergency
Business Hours	1	8	0	8	0	6	0	1	0	1	0	4	1	0	0	1	0	6	0	4	0	4	0	3
After-Business Hours	2	0	1	0	0	4	0	0	0	1	0	1	0	1	5	0	0	0	0	1	0	0	0	1
Total	**3**	**8**	**1**	**8**	**0**	**10**	**0**	**1**	**0**	**2**	**0**	**5**	**1**	**1**	**5**	**1**	**0**	**6**	**0**	**5**	**0**	**4**	**0**	**4**
Avg. Response Time (Min)	**16**	**28**	**30**	**27**	**0**	**132**	**0**	**36**	**0**	**21**	**0**	**26**	**10**	**30**	**27**	**84**	**0**	**46**	**0**	**108**	**0**	**53**	**0**	**24**

Type	January 2018		February 2018		March 2018		April 2018		May 2018		June 2018		July 2018		August 2018		September 2018		October 2018		November 2018		December 2018	
	Emergency	Non-Emergency	Emergency	Non-Emergency	Emergency	Non-Emergency	Emergency	Non-Emergency	Emergency	Non-Emergency	Emergency	Non-Emergency	Emergency	Non-Emergency	Emergency	Non-Emergency	Emergency	Non-Emergency	Emergency	Non-Emergency	Emergency	Non-Emergency	Emergency	Non-Emergency
Business Hours	0	2	0	4	1	5	0	9	0	8	0	7	0	4	0	6	0	4	0	5	0	8	0	8
After-Business Hours	1	0	1	3	0	0	0	1	0	0	0	0	0	0	0	0	0	0	0	0	0	0	0	0
Total	**1**	**2**	**1**	**7**	**1**	**5**	**0**	**10**	**0**	**8**	**0**	**7**	**0**	**4**	**0**	**6**	**0**	**4**	**0**	**5**	**0**	**8**	**0**	**8**
Avg. Response Time (Min)	**33**	**8**	**38**	**35**	**10**	**44**	**0**	**70**	**0**	**14**	**0**	**7**	**0**	**20**	**0**	**20**	**0**	**20**	**0**	**20**	**0**	**20**	**0**	**20**

Type	January 2019		February 2019		March 2019		April 2019		May 2019		June 2019		July 2019		August 2019		September 2019		October 2019		November 2019		December 2019	
	Emergency	Non-Emergency	Emergency	Non-Emergency	Emergency	Non-Emergency	Emergency	Non-Emergency	Emergency	Non-Emergency	Emergency	Non-Emergency	Emergency	Non-Emergency	Emergency	Non-Emergency	Emergency	Non-Emergency	Emergency	Non-Emergency	Emergency	Non-Emergency	Emergency	Non-Emergency
Business Hours	0	8	0	3	0	3	1	5	0	5	0	7	0	10	0	3	0	6	0	8	0	9	0	4
After-Business Hours	0	2	0	0	0	0	0	0	0	0	0	0	0	0	1	2	0	0	1	0	0	2	0	0
Total	**0**	**10**	**0**	**3**	**0**	**3**	**1**	**5**	**0**	**5**	**0**	**7**	**0**	**10**	**1**	**5**	**0**	**6**	**1**	**8**	**0**	**11**	**0**	**4**
Avg. Response Time (Min)	**0**	**20**	**0**	**20**	**0**	**20**	**20**	**20**	**0**	**20**	**0**	**20**	**0**	**20**	**35**	**20**	**0**	**20**	**20**	**20**	**0**	**20**	**0**	**20**

Appendix Q - Annual Report
Service Calls Totals

Service Calls 2013-2019							
	Year	Month	Emergency	Non-Emergency	Total	Annual Total	Annual Avg
January	2013	1/1/2013	4	2	6		
February	2013	2/1/2013	2	4	6		
March	2013	3/1/2013	0	4	4		
April	2013	4/1/2013	5	2	7		
May	2013	5/1/2013	1	4	5		
June	2013	6/1/2013	2	5	7		
July	2013	7/1/2013	1	0	1		
August	2013	8/1/2013	2	2	4		
September	2013	9/1/2013	2	5	7		
October	2013	10/1/2013	1	3	4		
November	2013	11/1/2013	1	4	5		
December	2013	12/1/2013	0	1	1	**57**	**4.75**
January	2014	1/1/2014	1	0	1		
February	2014	2/1/2014	5	4	9		
March	2014	3/1/2014	3	8	11		
April	2014	4/1/2014	3	6	9		
May	2014	5/1/2014	0	2	2		
June	2014	6/1/2014	0	7	7		
July	2014	7/1/2014	3	3	6		
August	2014	8/1/2014	3	5	8		
September	2014	9/1/2014	2	5	7		
October	2014	10/1/2014	2	3	5		
November	2014	11/1/2014	2	3	5		
December	2014	12/1/2014	1	10	11	**81**	**6.75**
January	2015	1/1/2015	5	4	9		
February	2015	2/1/2015	2	2	4		
March	2015	3/1/2015	1	6	7		
April	2015	4/1/2015	0	2	2		
May	2015	5/1/2015	0	4	4		
June	2015	6/1/2015	0	8	8		
July	2015	7/1/2015	2	11	13		
August	2015	8/1/2015	0	5	5		
September	2015	9/1/2015	3	7	10		
October	2015	10/1/2015	4	4	8		
November	2015	11/1/2015	0	4	4		
December	2015	12/1/2015	2	6	8	**82**	**6.83**
January	2016	1/1/2016	1	12	13		
February	2016	2/1/2016	1	5	6		
March	2016	3/1/2016	1	1	2		
April	2016	4/1/2016	0	5	5		
May	2016	5/1/2016	1	3	4		
June	2016	6/1/2016	0	3	3		
July	2016	7/1/2016	1	6	7		
August	2016	8/1/2016	0	9	9		
September	2016	9/1/2016	1	11	12		
October	2016	10/1/2016	0	5	5		
November	2016	11/1/2016	0	3	3		
December	2016	12/1/2016	1	2	3	**72**	**6.00**
January	2017	1/1/2017	3	8	11		
February	2017	2/1/2017	1	8	9		
March	2017	3/1/2017	0	10	10		
April	2017	4/1/2017	0	1	1		
May	2017	5/1/2017	0	2	2		
June	2017	6/1/2017	0	5	5		
July	2017	7/1/2017	1	1	2		
August	2017	8/1/2017	5	1	6		
September	2017	9/1/2017	0	6	6		
October	2017	10/1/2017	0	5	5		
November	2017	11/1/2017	0	4	4		
December	2017	12/1/2017	0	4	4	**65**	**5.42**
January	2018	1/1/2018	0	2	2		
February	2018	2/1/2018	0	4	4		
March	2018	3/1/2018	1	5	6		
April	2018	4/1/2018	0	9	9		
May	2018	5/1/2018	0	8	8		
June	2018	6/1/2018	0	7	7		
July	2018	7/1/2018	**0**	**4**	**4**		
August	2018	8/1/2018	**0**	**6**	**6**		
September	2018	9/1/2018	0	4	4		
October	2018	10/1/2018	0	5	5		
November	2018	11/1/2018	0	8	8		
December	2018	12/1/2018	0	8	8	71	5.916666667
January	2019	1/1/2019	0	10	10		
February	2019	2/1/2019	0	3	3		
March	2019	3/1/2019	0	3	3		
April	2019	4/1/2019	**1**	**5**	**6**		
May	2019	5/1/2019	**0**	**5**	**5**		
June	2019	6/1/2019	0	7	7		
July	2019	7/1/2019	0	10	10		
August	2019	8/1/2019	3	3	6		
September	2019	9/1/2019	0	0	0		
October	2019	10/1/2019	1	1	2		
November	2019	11/1/2019	0	2	2		
December	2019	12/1/2019	**0**	**4**	**4**	**58**	**4.833333333**

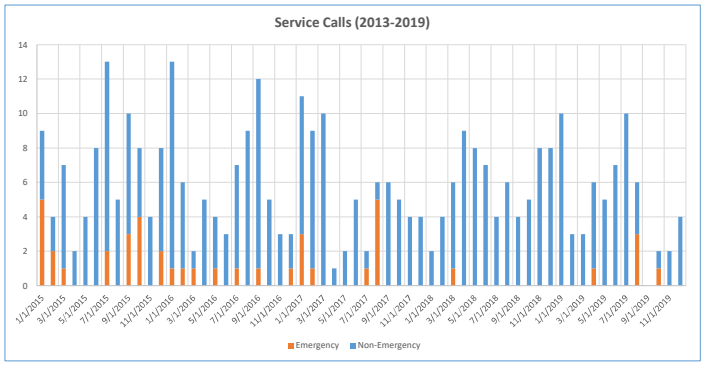

3. Miscellaneous

Type	2008 Total		January 2008		February 2008		March 2008		April 2008		May 2008		June 2008		July 2008		August 2008		September 2008		October 2008		November 2008		December 2008	
	Occurance	Hours	Occurance	Hours	Occurance	Hours	Occurance	Hours	Occurance	Hours	Occurance	Hours	Occurance	Hours	Occurance	Hours	Occurance	Hours	Occurance	Hours	Occurance	Hours	Occurance	Hours	Occurance	Hours
Stoppages/SSO	15	13	2	6	1	0	1	1	1	0	2	1	2	1	1	1	1	1	0	0	3	2	0	0	1	0
Safety Meetings Conducted	1	24		2	1			2		2		2		5		2		1		2		2		1		3
Trainings Conducted/Attended	1	18		2	0	0	1	1	0	3	0	2	0	1	0	3	0	1	0	1	0	3			0	1
Sick Leave Usage	14	178.5		32	14			10		16.0		2		3.0		7		0		27.5		33.0		26		24
Annual Leave Usage	8	125		0	8			0.0		0		0		0		56		32		21		0		8.0		8
Lost Time Due To Accident	0	0		0	0			0		0		0		0		0		0		0		0		0		0
Total	39	358.5																								

Type	2009 Total		January 2009		February 2009		March 2009		April 2009		May 2009		June 2009		July 2009		August 2009		September 2009		October 2009		November 2009		December 2009	
	Occurance	Hours	Occurance	Hours	Occurance	Hours	Occurance	Hours	Occurance	Hours	Occurance	Hours	Occurance	Hours	Occurance	Hours	Occurance	Hours	Occurance	Hours	Occurance	Hours	Occurance	Hours	Occurance	Hours
Stoppages/SSO	11	9	0	0	3	2	0	0	0	0	1	0	1	1	0	0	0	0	0	0	0	1	4	4	2	1
Safety Meetings Conducted	0	27		0		1		1		2		2		5.0		4		2		3		2		3		2
Trainings Conducted/Attended	3	22	0	2	0	2	0	2	0	1	0	3	0	2	0	1	0	1	0	2	3	0	0	3	0	3
Sick Leave Usage	0	244		0		8		10		26		31.5		59.0		20		8.0		27.0		23		32		0
Annual Leave Usage	0	537.5		40		8		21		38.0		24.0		19		44.0		160		48		16		56.0		64
Lost Time Due To Accident	0	0		0		0		0		0		0		0		0		0		0		0		0		0
Total	14	839.5																								

Type	2010 Total		January 2010		February 2010		March 2010		April 2010		May 2010		June 2010		July 2010		August 2010		September 2010		October 2010		November 2010		December 2010	
	Occurance	Hours	Occurance	Hours	Occurance	Hours	Occurance	Hours	Occurance	Hours	Occurance	Hours	Occurance	Hours	Occurance	Hours	Occurance	Hours	Occurance	Hours	Occurance	Hours	Occurance	Hours	Occurance	Hours
Stoppages/SSO	14	6	4	3	2	0	1	0	0	0	0	0	1	0	1	0	1	0	0	2	1	0	0	1	3	0
Safety Meetings Conducted	0	25		2		2		3.0		2		3.0		2.0		2		2.0		2.0		2		2		1
Trainings Conducted/Attended	1	8	0	1	0	0	1	3	0	0		0		2		0		2								
Sick Leave Usage	0	289		48		0		19		29		20		56.5		23		29.0		17.5		31.5		0.0		16
Annual Leave Usage	0	355		31		61		5		34		24		16		16		68		16		0		52.5		32
Lost Time Due To Accident	0	0		0		0		0		0		0		0		0		0		0		0		0		0
Total	15	683																								

Type	2011 Total		January 2011		February 2011		March 2011		April 2011		May 2011		June 2011		July 2011		August 2011		September 2011		October 2011		November 2011		December 2011	
	Occurance	Hours	Occurance	Hours	Occurance	Hours	Occurance	Hours	Occurance	Hours	Occurance	Hours	Occurance	Hours	Occurance	Hours	Occurance	Hours	Occurance	Hours	Occurance	Hours	Occurance	Hours	Occurance	Hours
Stoppages/SSO	5	2	0	0	1	0	1	1	0	0	0	0	0	0	0	0	0	0	0	0	1	0	1	1	1	0
Safety Meetings Conducted	1782	266.5	150	37	90	6	116	41.0	151	8.0	158	10.0	164	18	175	29.0	143	20	150	35.0	152	19	105	22.0	228	22.0
Trainings Conducted/Attended	0	25		3		1		2		2		2		2		2		3		2		2		2		2
Sick Leave Usage	0	372		32		23.5		0		27		38		10		44.0		17		33.5		71		48		29
Annual Leave Usage	0	296.5		8		24		32		29		41		8.0		4		32		48		24		48		0
Lost Time Due To Accident	0	0		0		0		0		0		0		0		0		0		0		0		0		0
Total	1787	962																								

Type	2012 Total		January 2012		February 2012		March 2012		April 2012		May 2012		June 2012		July 2012		August 2012		September 2012		October 2012		November 2012		December 2012	
	Occurance	Hours	Occurance	Hours	Occurance	Hours	Occurance	Hours	Occurance	Hours	Occurance	Hours	Occurance	Hours	Occurance	Hours	Occurance	Hours	Occurance	Hours	Occurance	Hours	Occurance	Hours	Occurance	Hours
Stoppages/SSO	9	7	1	1	0	0	1	1	0	1	1	0	0	0	1	0	1	1	0	0	0	0	3	2	1	1
Safety Meetings Conducted	1894	258.5	114	26.0	116	11.5	135	3	153	24	155	28.5	129	29	140	23.0	163	37.5	292	33.5	235	19.0	136	8.0	126	17
Trainings Conducted/Attended	0	26		2		2		2		3		2		3		3		2		2		2		1		2
Sick Leave Usage	0	428		63.0		15		24		71		40		8		40		35.0		20.5		28.5		39		45
Annual Leave Usage	0	423		24.0		18		24		24		61		24		16		93		4		39		52.5		44.0
Lost Time Due To Accident	0	0		0		0		0		0		0		0		0		0		0		0		0		0
Total	1903	1142.5																								

Appendix Q - Annual Report
Miscellaneous

Type	2013 Total		January 2013		February 2013		March 2013		April 2013		May 2013		June 2013		July 2013		August 2013		September 2013		October 2013		November 2013		December 2013	
	Occurance	Hours	Occurance	Hours	Occurance	Hours	Occurance	Hours	Occurance	Hours	Occurance	Hours	Occurance	Hours	Occurance	Hours	Occurance	Hours	Occurance	Hours	Occurance	Hours	Occurance	Hours	Occurance	Hours
Stoppages/SSO	**14**	**9**	3	2	2	0	0	0	1	2	1	1	1	0	1	0	1	1	1	1	1	2	1	0	1	0
Safety Meetings Conducted	**422**	**218**	32	15	24	14.5	21	16.5	51	23.5	58	28.5	50	17	55	24.5	87	25	40	21.5	1	14	2	9.5	1	8.5
Trainings Conducted/Attended	**0**	**36**		2		3		3.0		2		3		3		3		3		3		4		3		4.0
Sick Leave Usage	**0**	**712**		48		81		22		37		40		83		89.5		114		81.5		72		12		32
Annual Leave Usage	**0**	**412.5**		47		8		47		11		43		50		16.0		48		11.0		40		28		64
Lost Time Due To Accident	**0**	**0**		0		0		0		0		0		0.0		0		0		0		0		0		0
Total	**436**	**1387.5**																								

Type	2014 Total		January 2014		February 2014		March 2014		April 2014		May 2014		June 2014		July 2014		August 2014		September 2014		October 2014		November 2014		December 2014	
	Occurance	Hours	Occurance	Hours	Occurance	Hours	Occurance	Hours	Occurance	Hours	Occurance	Hours	Occurance	Hours	Occurance	Hours	Occurance	Hours	Occurance	Hours	Occurance	Hours	Occurance	Hours	Occurance	Hours
	14		**1**		**6**		**1**		**2**		**0**		**0**		**0**		**4**		**0**		**0**		**0**		**0**	
Stoppages/SSO	**68**	**83**	**1**	**8.5**	**6**	**10**	**0**	**7**	**1**	**11**	**13**	**11.5**	**16**	**12**	**18**	**10.5**	**7**	**4.5**	**2**	**3**	**2**	**2.5**	**2**	**2.5**		**0**
Trainings Conducted/Attended	**0**	**34**		4		4		3		1		2		6		2		4		3		1		2		2
Sick Leave Usage	**0**	**619.5**		19.5		48		19.5		56		55		61		50		45.5		87.5		88.5		51		38
Annual Leave Usage	**0**	**893**		39		8		98.5		56		41		24		33		97		72		64		114		247.5
Lost Time Due To Accident	**0**	**0**		0		0		0		0		0		0		0		0		0		0		0		0
Total	**82**	**1638.5**																								

Type	2015 Total		January 2015		February 2015		March 2015		April 2015		May 2015		June 2015		July 2015		August 2015		September 2015		October 2015		November 2015		December 2015	
	Occurance	Hours	Occurance	Hours	Occurance	Hours	Occurance	Hours	Occurance	Hours	Occurance	Hours	Occurance	Hours	Occurance	Hours	Occurance	Hours	Occurance	Hours	Occurance	Hours	Occurance	Hours	Occurance	Hours
Stoppages/SSO	3	8	0	0	0	0	1		0		0		0		3		0		3		1		1	0	2	0
Undergrouund Service Alert	**0**																									
	1	**27.5**		**1**	**1**	**2.5**		**2**		**10**		**0**		**2**		**2**		**2**		**1**		**2**		**1**		**2**
Trainings Conducted/Attended	**0**	**19**		2		3		3		4		3		4												
Sick Leave Usage	**0**	**341.5**		60		47.5		44		40		83		67												
Annual Leave Usage	**0**	**287**		136		8		32		64		10		37												
Lost Time Due To Accident	**0**	**0**		0		0		0		0		0		0		0		0		0		0		0		0
Total	**4**	**704**																								

Type	2016 Total		January 2016		February 2016		March 2016		April 2016		May 2016		June 2016		July 2016		August 2016		September 2016		October 2016		November 2016		December 2016	
	Occurance	Hours	Occurance	Hours	Occurance	Hours	Occurance	Hours	Occurance	Hours	Occurance	Hours	Occurance	Hours	Occurance	Hours	Occurance	Hours	Occurance	Hours	Occurance	Hours	Occurance	Hours	Occurance	Hours
Stoppages/SSO	**7**		2		1		1		0		3		0		0		0		0		0		0		0	
Undergrouund Service Alert	**22**		1		1		6		1		3		3		1		1		3		1		0		1	
Safety Meetings Conducted	**46**		2		4		3		4		3		2		6		5		3		3		6		5	
Trainings Conducted/Attended		**418**		25		62		69.5		57.5				17.5		69.5		20		47.5		2		0	0	48
Sick Leave Usage		**569.5**		80		73.5		46		66				56.5		56.5		65.5		54		32		0		40
Annual Leave Usage		**425**		48		32.5		91		40				54		5.5		8		58		45		0		43
Lost Time Due To Accident		**0**	0		0		0		0		0		0		0		0		0		0		0		0	
Total	**75**	**1412.5**																								

`	2017 Total		January 2017		February 2017		March 2017		April 2017		May 2017		June 2017		July 2017		August 2017		September 2017		October 2017		November 2017		December 2017	
	Occurance	Hours	Occurance	Hours	Occurance	Hours	Occurance	Hours	Occurance	Hours	Occurance	Hours	Occurance	Hours	Occurance	Hours	Occurance	Hours	Occurance	Hours	Occurance	Hours	Occurance	Hours	Occurance	Hours
Stoppages/SSO	**3**		0		1		0		0		0		0		0		0		0		1		0		1	
Undergrouund Service Alert	**24**		0		4		2		1		4		3		5		1		0		0		4		0	
Safety Meetings Conducted	**31**		3		4		2		2		4		1		2		2		3		2		3		3	
Trainings Conducted/Attended		**742**		6.5		37.5		9.5		122		30		119		37.5		94		88		180		16		2
Sick Leave Usage		**653.5**		17.5		44		61.5		61.5		55		60.5		49.5		61		45		56		60		82
Annual Leave Usage		**576**		80		8		0		8		24		112		48		56		48		80		0		112
Lost Time Due To Accident		**0**	0		0		0		0		0		0		0		0		0		0		0		0	
Total	**58**	**1971.5**																								

Type	2018 Total		January 2018		February 2018		March 2018		April 2018		May 2018		June 2018		July 2018		August 2018		September 2018		October 2018		November 2018		December 2018	
	Occurance	Hours	Occurance	Hours	Occurance	Hours	Occurance	Hours	Occurance	Hours	Occurance	Hours	Occurance	Hours	Occurance	Hours	Occurance	Hours	Occurance	Hours	Occurance	Hours	Occurance	Hours	Occurance	Hours
Stoppages/SSO	**1**	**0**	1		0		0		0		0		0		0		0		0		0		0		0	
Undergrouund Service Alert	**39**	**0**	3		4		3		3		5		0		2		3		6		4		2		4	
Safety Meetings Conducted	**31**	**0**	3		3		2		4		2		2		2		3		2		4		2		2	
Trainings Conducted/Attended		**439**		20				3		46		67		5		1		31.5		97		40.5		104		24
Sick Leave Usage		**499**		101				40		67		16		33.5		51		42		43.5		32		53		21
Annual Leave Usage		**673**		80				24		56		36		80		72		106		16		8		75		120
Lost Time Due To Accident		**0**		0				0		0		0				0		0		0		0		0		0
	71	**1611**																								

Appendix Q - Annual Report
Miscellaneous

Type	2019 Total		January 2019		February 2019		March 2019		April 2019		May 2019		June 2019		July 2019		August 2019		September 2019		October 2019		November 2019		December 2019	
	Occurance	Hours	Occurance	Hours	Occurance	Hours	Occurance	Hours	Occurance	Hours	Occurance	Hours	Occurance	Hours	Occurance	Hours	Occurance	Hours	Occurance	Hours	Occurance	Hours	Occurance	Hours	Occurance	Hours
Stoppages/SSO	**2**	**0**	0		0		0		1		0		0		0		0		0		1		0		0	
Undergrouund Service Alert	**25**	**0**	1		2		0		3		4		11		3		0		0		0		1		0	
Safety Meetings Conducted	**34**	**0**	3		3		3		3		3		2		2		3		3		3		3		3	
Trainings Conducted/Attended	**0**	**469**		20		33		3		43		67		5		1		31.5		97		40.5		104		24
Sick Leave Usage	**0**	**516**		100.5		17		40		67		16		33.5		51		42		43.5		32		53		20.5
Annual Leave Usage	**0**	**673**		80		0		24		56		36		80		72		106		16		8		75		120
Lost Time Due To Accident																										
	61	**1658**																								

(THIS PAGE INTENTIONALLY LEFT BLANK)

APPENDIX R

SSMP Update Tracking Log

Appendix R: SSMP Update Log

Description	Date of Last Update	Date Updated	Responsible Party	Notes
Element 2. Organization	August 2020	December 2022	General Manager	Element updated with minor text revisions and updated org chart.
Element 6. Overflow Emergency Response Plan	August 2020	December 2022	Collection System Maintenance Supervisor	Element updated with updated SSO Response Procedure Flow Chart
Appendix B: Staff Names, Positions, and Contact Information	August 2020	December 2022	Administrative Technician	Updated contact info for CSM Worker and phone numbers for all staff
Appendix C: Map Book	August 2020	December 2022	Engineering Technician	Updated CVSan Map Book as of June 2022.
Appendix D: Inventory	August 2020	December 2022	Engineering Technician	Updated CVSan GIS Collection System Asset Inventory
Appendix E: District Budget	August 2020	December 2022	Engineering Technician	Updated CVSan annual budget for current fiscal year.
Appendix F: Historic SSO Event Table	August 2020	December 2022	Engineering Technician	Updated SSO Event Table and SSO Map.
Appendix G: Gravity Sewer AMP	August 2020	December 2022	Engineering Technician	Updated GSAMP to include most recent priority repair list.
Appendix J: 10-Year Capital Improvement Plan	August 2020	December 2022	Associate Engineer	Updated 10-year CIP, and for current fiscal year.
Appendix K: Training Schedule	August 2020	December 2022	Administrative Technician	Updated training schedule for 2022.
Appendix M: Overflow ERP - Field Packet	August 2020	December 2022	Collection System Maintenance Supervisor	Updated SSO Response Flowchart
Appendix R: SSMP Update Tracking Log	August 2020	December 2022	Engineering Technician	Updated the SSMP Update Tracking Log.
Appendix S: SSMP Audit Report	August 2020	December 2022	Engineering Technician	Updated SSMP Audit Report and Action Plan Table to reflect on current updates.
Element 6. Overflow Emergency Response Plan	December 2022	May 2023	Collection System Maintenance Supervisor	Element updated from OERP to SERP to comply with new SSS-WDR requirements.

(THIS PAGE INTENTIONALLY LEFT BLANK)

APPENDIX S

SSMP Audit Report & Action Plan

TO:	Board of Directors
FROM:	Roland P. Williams, General Manager Landon Lochrie, Associate Engineer Gregory Williams, Collection System Maintenance Supervisor
SUBJECT:	**Sewer System Management Plan Audit Report**
DATE:	December 20, 2022

---

1. Regulatory Background:

The Sewer System Management Plan (SSMP) has been prepared in compliance with requirements of the State Water Resource Control Board (SWRCB) pursuant to Order No. 2006 0003, Statewide General Waste Discharge Requirements for Sanitary Sewer Systems (SSS WDR), and Order No. WQ 2013 0058 EXEC, which amends the Monitoring and Reporting Program of the original SSS WDR. The SSS WDR requires development and implementation of a written SSMP and defines 11 mandatory SSMP elements. The SSS WDR also defines associated monitoring, record keeping, reporting, and public notification requirements.

2. Scope and Objectives:

The Castro Valley Sanitary District's (CVSan's) SSMP was first prepared in 2006 and was most recently updated in 2020. The SSMP is a living document and is updated as needed to reflect changes to the SSMP elements and adjoining documents.

The SSMP Audit Report will serve as a tool to evaluate any accomplishments since the last SSMP audit, the effectiveness of the changes made, and any recommendations or improvements that need to be made for the future.

3. Audit Team & Schedule:

The CVSan audit team consists of the collaboration between various members of the CVSan Collections System Maintenance Department (CSM) and the Engineering Department (ENG).

The most recent SSMP update was approved by CVSan's Board on August 4, 2020, and it was submitted to the SWRCB in 2021. According to the SSS WDR, Section D14, the SSMP is to be audited internally every two years and a comprehensive SSMP audit is required every five years. CVSan conducts a SSMP audit on a biennial basis. The goal of the audit is to focus on the effectiveness or deficiencies in the SSMP, as well as in CVSan's practices, to implement corrective measures. Because of the anticipated adoption of updated SSS-WDR requirements, the next comprehensive SSMP update is also anticipated to change. The next estimated SSMP audit is scheduled for 2024.

4. Findings by Element:

A. Element 1 – Goals:

Element 1 highlights CVSan's goal for the SSMP. The SSMP has been developed as a supplement to CVSan's 2019-24 Strategic Plan (see Appendix A). The Strategic Plan identifies three guiding principles that provide direction to achieving the SSMP goals. The guiding principles are: The CVSan Mission Statement, Vision Statements, and Strategic Goal.

Accomplishments Since Last Audit:
CVSan worked on and completed a full update to the five-year Strategic Plan in 2019. This Strategic Plan update incorporated input and working sessions by CVSan staff, leadership team and the Board of Directors.

Effectiveness Evaluation:
Element 1 identifies CVSan's goals clearly as they relate to the SSMP.

Recommendations/Improvements:
There are no recommendations or improvements for Element 1.

B. Element 2 – Organization:

Element 2 highlights the CVSan organizational chart, as well as the staff responsible for the implementation of specific measures in the SSMP program. The CVSan General Manager (GM) is responsible for directing, developing, implementing, evaluating, and administering the operations and staff required to design, construct, operate, and maintain CVSan's sewer infrastructure.

Accomplishments Since Last Audit:
The organizational chart was updated. The staff position of Accounting Clerk was added to the Business Services Department.

Effectiveness Evaluation:
Element 2 clearly defines the staff organization responsible for CVSan's SSMP.

Recommendations/Improvements:
There are no recommendations or improvements for Element 2.

C. Element 3 – Legal Authority:

Element 3 highlights the legal authority that CVSan establishes through its Code.

Accomplishments Since Last Audit:
Minor code updates were made to the CVSan Code since the last audit. In 2021, CVSan updated the wastewater capacity fee. In 2022, CVSan updated Standard Drawing No. 11, which updated the standard CVSan frame and cover.

Effectiveness Evaluation:

Element 3 clearly defines CVSan's legal authority through its Code to protect CVSan's sanitary sewer system from illicit discharges and ensures all sewers and connections are properly designed, constructed, and maintained.

Recommendations/Improvements:
There are no recommendations or improvements for Element 3.

D. Element 4 – Operation and Maintenance (O&M) Program:
Element 4 highlights the operation and maintenance (O&M) program that CVSan employs for the sanitary sewer system of Castro Valley. This includes maintaining up-to-date maps, describing the preventative maintenance (PM) program procedures, assessing the condition of gravity sewers by Closed-Circuit Television (CCTV) inspection, training for all CSM staff, managing the inventory of sewer maintenance equipment and parts, and outreach to contractors and residents.

Accomplishments Since Last Audit:
Utilizing Lucity Mobile and the use of tablets, CSM has implemented a completely paperless work order format for all maintenance activities and inspections. This includes preventative and routine cleaning, CCTV, pump station (PS), fleet and facilities maintenance logbooks, and all other maintenance records which are now recorded electronically. Weekly safety inspections are completed on every in-service vehicle, and bi-weekly inspections are completed on all PSs. CSM has also implemented a new vehicle replacement plan to calculate optimal replacement cycles of all vehicles and heavy equipment.

Effectiveness Evaluation:
Element 4 is clear and defines the staff organization responsible for CVSan's SSMP.

Recommendations/Improvements:
Section 4.3 – Duke's chemical root treatment services has been evaluated and determined to not be an effective treatment for our system. Evaluate the available chemical root treatment (CRT) options to determine effectiveness and feasibility while mitigating all of the current root impacted sewer mains with CCTV and mechanical cleaning methods.
Section 4.6 - Develop an inventory system to be managed by the Computerized maintenance management system (CMMS).
Section 4.6 - There is no inventory of equipment or parts that is managed by the CMMS.

E. Element 5 – Design and Performance Standards:
Element 5 highlights CVSan's design and construction standards, and the standards for inspection and testing of new and rehabilitated facilities.

Accomplishments Since Last Audit:
Staff updated the Standard Drawing No. 11 for CVSan manhole frame and covers.

Effectiveness Evaluation:
The updated Standard Drawing No. 11 for manhole frame and covers now show lids that have a more detailed design to help better represent CVSan.

Recommendations/Improvements:
There are no recommendations or improvements for Element 5.

F. Element 6 – Overflow Emergency Response Plan (OERP):
Element 6 highlights the reporting process required by several agencies for reporting discharges of wastewater that enter a drainage channel or a surface water. CVSan identifies the steps taken to respond and mitigate any potential or active Sanitary Sewer Overflows (SSOs).

Accomplishments Since Last Audit:
Utilizing Lucity Mobile and tablets, CSM has implemented a completely paperless reporting system. This allows field crews to document the spill event draft report electronically with photos directly into the database.

Effectiveness Evaluation:
Element 6 is clear and defines the staff organization responsible for CVSan's SSMP.

Recommendations/Improvements:
Update flow chart to reflect changes made in the documenting and reporting process.

G. Element 7 – Fats, Oils, and Grease (FOG) Control Program:
Element 7 highlights CVSan's Fats, Oils, and Grease (FOG) Program. The purpose of the FOG Control Program is to minimize and mitigate the impact of FOG related SSOs that can occur within CVSan's jurisdiction.

Accomplishments Since Last Audit:
CVSan staff began utilizing mobile technology (tablets) to perform inspections and thereby reduce paperwork, time-spent on data entry, etc. The FOG program has been revised to divide the Food Service Establishments (FSE) into groups via smaller "basins" throughout CVSan.

Effectiveness Evaluation:
Utilizing tablets has improved efficiency by allowing staff to complete inspection reports in the field electronically rather than utilizing scanned documents. The FOG inspection program has been improved and feedback from our CSM Department has allowed our FOG inspection staff to identify areas within our system that have an unusual amount of FOG in the sewer mains. Staff have then been able to identify potential contributing FOG producing businesses and have been able to complete follow up inspections to track the potential sources of unusually high levels of the FOG to our sewer system. CVSan's enforcement mechanisms utilized to bring some of the FOG producing restaurants or business into compliance has been moderately effective over the past two years.

Recommendations/Improvements:
The way the CMMS program (Lucity) is used for FOG entries could be improved/streamlined. This would allow CVSan to have all of its inspection data and information directly input into Lucity and would eliminate the need for additional scans and document management. Another improvement to be considered would be to expand on CVSan's limited enforcement options. This could be accomplished by requiring that all FSE's obtain and renew annual permits to be compliant with CVSan code and requirements. Another improvement option would be to expand the Enforcement Response Plan to address FSE's and the FOG program.

H. Element 8 – System Evaluation and Capacity Assurance Plan:
Element 8 highlights how CVSan assesses its capacity through three criteria: Condition Assessment, Hydraulic Assessment, and O&M Assessment.

Accomplishments Since Last Audit:
In 2019, CVSan implemented the Private Sewer Lateral (PSL) Program which requires all commercial, industrial, and residential properties to obtain a sewer lateral compliance certificate when the building is sold. The PSL Program was established to reduce CVSan's I&I and the program was one of the recommended items identified in the 2016 Wastewater Collection System Master Plan Update. In 2019, CVSan also completed two capacity improvement projects that had been identified in the 2016 Master Plan and confirmed through recent flow monitoring efforts. In 2022, CVSan completed another capacity improvement project recommended after completing and update to our hydraulic model which recommending increasing the diameter and adjusting the invert of an overflow pipeline in our large diameter conveyance system area. These capacity improvement projects have eliminated the potential for surcharging in some of CVSan's high-risk conveyance sewer lines and reduced the amount of surcharging in others, and will result in a reduction in the likelihood of an SSO in those affected areas.

Effectiveness Evaluation:
The PSL Program has seen a fourfold increase in the number of private sewer laterals replaced annually. Since the PSL Program was effective approximately 17 miles of private sewer laterals have been replaced. CVSan does not currently have enough data to evaluate the effectiveness of the Private Sewer Lateral Program. The capacity improvement work including the upsizing of various conveyance sewer pipelines is anticipated to eliminate any bottle neck hydraulic issues in the system in the areas where work was completed. Staff will continue to evaluate the system through upcoming wet weather seasons to confirm that the desired outcomes have been achieved.

Recommendations/Improvements:
CVSan had a CRT program in place to treat public sewer mains that have been identified by the PM program as having potential root blockage issues. The CRT service was contracted out to a commercial provider on a revolving basis. In 2019, the

CRT program was suspended because the chemical product supplied by the commercial provider was tested by CVSan staff and found to have inconsistent results. CVSan staff evaluated utilizing a different chemical product and has purchased a new sanitary sewer cleaning flusher truck equipped with a chemical root control foaming machine. The plan is to certify CVSan staff to be qualified to perform the CRT program instead of contracting out the service.The goal is to find a solution to treat public sewer mains that are a hotspot for root blockages.

I. Element 9 – Monitoring, Measurement, and Program Modifications:

Element 9 highlights the way CVSan maintains information that can be used to monitor the performance of the SSMP.

Accomplishments Since Last Audit:

There have been no accomplishments since the last audit regarding Element 9.

Effectiveness Evaluation:

Element 9 identifies CVSan's goals clearly as they relate to the SSMP.

Recommendations/Improvements:

CVSan staff will work on developing a more comprehensive and robust evaluation matrix and methodology that will be used to evaluate the effectiveness and overall performance of the SSMP. Appendix Q will be expanded to include more than just footage and SSO data.

J. Element 10 – SSMP Program Audits:

Element 10 highlights the CVSan audit process for the SSMP. The audit will be conducted by the CVSan staff from the Collection System Maintenance, Engineering and Business Services Departments, performed under the supervision of the GM.

Accomplishments Since Last Audit:

There have been no accomplishments since the last audit regarding Element 10.

Effectiveness Evaluation:

The previous SSMP internal audit was conducted in 2020. Staff made several changes to Elements and Appendices to better highlight the current processes at CVSan.

Recommendations/Improvements:

The previous audit report was insufficient in details and has been modified to be more descriptive and consistent to what is required by Element 10.

K. Element 11 – Communication Program:

Element 11 highlights the ways CVSan communicates with the public on a regular basis on the development, implementation, and performance of the SSMP.

Accomplishments Since Last Audit:
CVSan staff developed a notification letter that can easily be sent to homeowners or property owners that have been found to have defective lateral connections to CVSan public sewer mains. CVSan staff also documents which properties have defective laterals during the CCTV inspection of the sewer mainlines. Staff then coordinate the issuance of a letter or notification which is mailed to the property to inform the resident that their private sewer lateral has a defective connection to the sewer main. This is done as a courtesy with the anticipation that more defective laterals and lateral connections will be repaired over time and that if some private laterals are found to have serious root control concerns, that those may be able to be cleared or repaired prior to a blockage or overflow occurring in the private sewer lateral.

Effectiveness Evaluation:
CVSan will continue to evaluate the effectiveness of the communication with our rate payers as well as other groups including the Community Advisory Committee (CAC). Since the process of sending out the lateral defect notification letters only began in early 2020, CVSan has not been able to evaluate how effective those new notifications are yet, but staff will continue to monitor those properties in the future to see how many of them use this information to perform maintenance or repairs to their private sewer laterals.

Recommendations/Improvements:
A list of privately owned tributary sewer systems has not been established yet. A recommendation would be to identify all of the privately owned sewer systems that connect to CVSan's sanitary sewer system and develop a communication plan for them.

5. Conclusions/Action Plan for Improvement:

The completion of this audit has resulted in several incremental and systematic changes that staff are recommending for improvement of CVSan's SSMP. These items for improvement are captured in Table 1 as an attachment to this SSMP Audit Report.

Table 1. SSMP Audit and Action Plan

	SSMP Requirement	Audit/Gap Analysis				Action Plan		
		BMP Gap	Management Tool Gap	WDR Compliance Gap	Comments	Responsibility	Action	Schedule
ELEMENT 1 – GOALS								
A.	Are the goals stated in the SSMP still appropriate and accurate?				The Goals section has been updated to reflect the current Strategic Plan. The three guiding principles are listed and are broken down in the section. No Gap.		Completed	
ELEMENT 2 -- ORGANIZATION								
A.	Is the Public Works Services Key Staff Telephone List current?				A Staff Contact Info List with maintenance staff is provided in Appendix B. No Gap.		Completed	
B.	Is the Sanitary Sewer Overflow Responder Telephone List current?				Telephone list for maintenance staff and a SSO Response Procedure Flow Chart is provided under Element 6. No Gap.		Completed	
C.	Is Figure 1 of the SSMP, entitled “District Organization Chart,” current?				Figure is shown in the SSMP. No Gap.		Completed	
D.	Are the position descriptions an accurate portrayal of staff responsibilities?				No Gap. Descriptions listed are clear, detailed and consistent with Figure 1.		Completed	
E.	Does the SSMP identify the Chain of Communication for Reporting SSOs, and is it accurate and up-to-date?				List of communication contacts in the event of an SSO and the SSO Response Procedure Flow Chart is provided in Element 6 and also found in Appendix M. No Gap.		Completed	

Table 1. SSMP Audit and Action Plan								
		Audit/Gap Analysis				Action Plan		
	SSMP Requirement	BMP Gap	Management Tool Gap	WDR Compliance Gap	Comments	Responsibility	Action	Schedule
F.	Does the SSMP identify staff responsible for implementing, specific measures in the SSMP?				No Gap. This is met by Table "Responsibility for SSMP Implementation"		Completed	
ELEMENT 3 – LEGAL AUTHORITY								
Does the SSMP contain excerpts from the current CVSan Code documenting the District's legal authority to:								
A.	Prevent illicit discharges?				This requirement is addressed in the Table 3.2: Legal Authority Checklist. No Gap.		Completed	
B.	Require proper design and construction of sewers and connections?				This requirement is addressed in the Table 3.2: Legal Authority Checklist. No Gap.		Completed	
C.	Ensure access for maintenance, inspection, or repairs for portions of the system located within private property?				This requirement is addressed in the Table 3.2: Legal Authority Checklist. No Gap.		Completed	
D.	Limit discharges of fats, oil and grease?				This requirement is addressed in the Table 3.2: Legal Authority Checklist and is discussed in Element 7. No Gap.		Completed	
E.	Enforce any violation of its sewer ordinances?				No Gaps Identified. This requirement is addressed by CVSan Code, section 4408 and is specifically titled Enforcement.		Completed	
ELEMENT 4 – OPERATIONS AND MAINTENANCE								
Collection System Maps								
A.	Does the SSMP reference the current process and procedures for maintaining the District's wastewater collection system maps?				No Gap. SSMP references that new map books are produced annually, or as needed.		Completed	

Table 1. SSMP Audit and Action Plan								
		Audit/Gap Analysis				Action Plan		
	SSMP Requirement	BMP Gap	Management Tool Gap	WDR Compliance Gap	Comments	Responsibility	Action	Schedule
B.	Are the District's wastewater collection system maps complete, current, and sufficiently detailed (including showing applicable storm water conveyance facilities)?		✓		Storm water facilities (i.e. location and size of storm drains, location of stormdrain inlets, etc.) were added to web map as a separate layer. No Gap.		Completed	
Resources and Budget								
C.	Does the District allocate sufficient funds for the effective operation, maintenance and repair of the wastewater collection system and is the current budget structure documented in the SSMP?				CVSan's Operating Budget can be found in Appendix E. No Gap.		Completed	
Prioritized Preventive Maintenance								
D.	Does the SSMP describe current preventive maintenance activities and the system for prioritizing regular maintenance and cleaning of the system?				Requirements met. CVSan currently: (1) hydro flushes, (2) hydro root saws, (3) machine rods, (4) and performs chemical root treatment. CVSan also monitors "Hot Spots." Maintenance frequencies is summarized in Table 4.1. No Gap.		Completed	
E.	Based upon information in the Annual SSO Report, are the District's preventive maintenance activities sufficient and effective in minimizing SSOs and blockages?				An SSO event log and map of historical SSO locations can be found in Appendix F. No Gap.		Completed	

Table 1. SSMP Audit and Action Plan								
		Audit/Gap Analysis				Action Plan		
	SSMP Requirement	BMP Gap	Management Tool Gap	WDR Compliance Gap	Comments	Responsibility	Action	Schedule
Scheduled Inspections and Condition Assessments								
F.	Is there an ongoing condition assessment program? Are the current components of this program documented in the SSMP?				A Gravity Sewer Asset Management Plan was developed in August of 2015 that addresses the condition assessment procedures for gravity mains, manholes, pump stations, and forcemains. It can be found in Appendix G. No Gap.		Completed	
G.	Is there a system for prioritizing the rehabilitation and replacement program? Does the capital improvement plan (CIP) include a time schedule for implementing the short- and long-term needs, plus a schedule for developing the funds needed for the CIP?				A 10-year CIP is provided in Appendix J. No Gap.		Completed	
Training								
H.	Is the training calendar current?				A calendar of CVSan safety trainings is provided in Appendix K. The SSMP mentions that collection system crews participate in bi-weekly safety tailgates. No Gap.		. Completed	
I.	Does the SSMP document current training expectations and programs within the District's Wastewater Division?				A calendar of CVSan safety trainings is provided in Appendix K. No Gap.		Completed	
Contingency Equipment and Replacement Inventory								

Table 1. SSMP Audit and Action Plan								
		Audit/Gap Analysis				Action Plan		
	SSMP Requirement	BMP Gap	Management Tool Gap	WDR Compliance Gap	Comments	Responsibility	Action	Schedule
J.	Does the SSMP list the major equipment currently used in the operation and maintenance of the collection system and document the procedures of inventory management?		✓		The vehicle list is inventoried by collection systems maintenance staff and can be found in Appendix L. An inventory list for major equipment still needs to be developed and included in the SSMP.	Maintenance	Add inventory table for equipment to Appendix L	12/31/20
K.	Are contingency equipment and replacement parts sufficient to respond to emergencies and properly conduct regular maintenance?	✓		✓	Based on the description detailed, the replacement parts on hand are not adequate enough to meet emergency needs or are "in sufficient quantity to make emergency repairs"	Maintenance	Emergency repair inventory still needs to be purchased and stored for emergencies	12/31/20
Outreach to Plumbers and Building Contractors								
L.	Does the SSMP document current outreach efforts to plumbers and building contractors?				No Gaps Identified. SSMP outlines that quarterly newsletters are mailed off. An Annual Contractors Meeting is also provided.		Completed	
ELEMENT 5 – DESIGN AND PERFORMANCE STANDARDS								
A.	Does the SSMP contain current design and construction standards for the installation of new sanitary sewer systems, pump stations and other appurtenances and for the rehabilitation and repair of existing sanitary sewer systems?				The SSMP references CVSan's existing General Provisions and Specifications for the Construction of Sanitary Sewers. No Gap.		Completed	

Table 1. SSMP Audit and Action Plan								
		Audit/Gap Analysis				Action Plan		
	SSMP Requirement	BMP Gap	Management Tool Gap	WDR Compliance Gap	Comments	Responsibility	Action	Schedule
B.	Does the SSMP document current procedures and standards for inspecting and testing the installation of new sewers, pumps, and other appurtenances and the rehabilitation and repair of existing sewer lines?				The SSMP document refers to the existing General Provisions and Specifications for the Construction of Sanitary Sewers, Chapter 9 Testing Procedure. The Testing procedures outline within are adequate and meet the requirements. The Design and Construction Standards should be updated in 2019. No Gap.		Completed	
ELEMENT 6 – OVERFLOW AND EMERGENCY RESPONSE PLAN								
A.	Does the District's Sanitary Sewer Overflow (SSO) Emergency Response Plan (ERP) establish procedures for the emergency response, notification, and reporting of SSOs?				A flow chart for SSO Response Procedures and SSO Reporting Procedures is shown in Element 6. A SSO field packet and management packet are included as Appendix M and Appendix N. No Gap.		Completed	

Table 1. SSMP Audit and Action Plan								
		Audit/Gap Analysis				Action Plan		
	SSMP Requirement	BMP Gap	Management Tool Gap	WDR Compliance Gap	Comments	Responsibility	Action	Schedule
B.	Does the SSO ERP establish procedures to ensure prompt notification to appropriate regulatory agencies and other potentially affected entities (e.g. health agencies, Regional Water Boards, water suppliers, etc.) of all SSOs that potentially affect public health or reach the waters of the State in accordance with the Revised MRP? Does the SSMP identify the officials who will receive immediate notification?				Procedures for SSO reporting can be found in Element 6 as well as Appendix N. No Gap.		Completed	
C.	Does the SSO ERP include a program to ensure that all reasonable steps are taken to contain and prevent the discharge of untreated and partially treated wastewater to surface waters and to minimize or correct any adverse impact on the environment resulting from the SSOs?				Procedures for SSO response can be found in Element 6 as well as Appendix M. No Gap.		Completed	
D.	Are staff and contractor personnel appropriately trained on the procedures of the SSO ERP?			✓	Documentation is required. No training is indicated in the element.	Maintenance	Add section about training for SSO ERP	

Table 1. SSMP Audit and Action Plan								
		Audit/Gap Analysis				Action Plan		
	SSMP Requirement	BMP Gap	Management Tool Gap	WDR Compliance Gap	Comments	Responsibility	Action	Schedule
E.	Considering performance indicator data in the Annual SSO Report, is the Sanitary Sewer Overflow Emergency Response Plan effective in handling SSOs to safeguard public health and the environment?				Historical SSO information can be found in Appendix F. No Gap.		Completed	
ELEMENT 7 – FATS, OILS, AND GREASE (FOG) CONTROL PROGRAM								
A.	Does the Fats, Oils, and Grease (FOG) Control Program include efforts to educate the public on the proper handling and disposal of FOG?				No Gaps identified. CVSan currently distributes informational brochures. SSMP should also include that proper FOG handling is also described on the CVSan website.		Completed	
B.	Does the District's FOG Control Program identify sections of the collection system subject to FOG blockages, establish a cleaning schedule and address source control measures to minimize these blockages?	✓	✓		SSMP discusses that CVSan keeps a map that contains FOG hotspots, however FOG-specific hotspots are not identified on CVSan maps. A maintenance schedule identifying FOG-specific maintenance activity is not included in the SSMP either. This could be rectified by tracking these areas in a spreadsheet format and including as appendix.	Maintenance/ Engineering	A FOG hotspot map can be generated once the CMMS web map is implemented.	
C.	Are requirements for grease removal devices, best management practices (BMP), record keeping and reporting established in the District's FOG Control Program?				Documents for the CVSan Fog Control Program are included Appendix O. No Gap.		Completed	

Table 1. SSMP Audit and Action Plan								
		Audit/Gap Analysis				Action Plan		
	SSMP Requirement	BMP Gap	Management Tool Gap	WDR Compliance Gap	Comments	Responsibility	Action	Schedule
D.	Does the District have sufficient legal authority to implement and enforce the FOG Control Program?				No Gaps Identified.		Completed	
E.	Is the current FOG program effective in minimizing blockages of sewer lines resulting from discharges of FOG to the system?	✓	✓	✓	Performance indicators need to be identified and tracked so that this question can be answered effectively.	Maintenance/ Engineering	Implement tracking in CMMS to identify if program is working	
ELEMENT 8 – SYSTEM EVALUATION AND CAPACITY ASSURANCE PLAN								
A.	Does the Sanitary Sewer Master Plan evaluate hydraulic deficiencies in the system, establish sufficient design criteria and recommend both short and long term capacity enhancement and improvement projects?	✓	✓		SSMP includes general discussion of CVSan's hydraulic assessment. SSMP includes a general description of the prioritization of sewer system improvements. Description of design criteria is lacking and a general discussion on what constitutes a capacity deficient pipeline should be included.	Engineering		
B.	Does the District's Capital Improvement Plan (CIP) establish a schedule of approximate completion dates for both short and long-term improvements and is the schedule reviewed and updated to reflect current budgetary capabilities and activity accomplishment?	✓	✓	✓	SSMP includes general discussion but does not explicitly list the proposed short term and long term improvements. Add CIP implementation schedule. CIP implementation schedule should be integrated with the GIS and CMMS for effective tracking and mapping. A 10-year CIP is included in Appendix J.	Engineering		

Table 1. SSMP Audit and Action Plan

	SSMP Requirement	Audit/Gap Analysis				Action Plan		
		BMP Gap	Management Tool Gap	WDR Compliance Gap	Comments	Responsibility	Action	Schedule
ELEMENT 9 – MONITORING, MEASUREMENT, AND PROGRAM MODIFICATIONS								
A.	Does the SSMP accurately portray the methods of tracking and reporting selected performance indicators?		✓		Current performance indicators are indicative of specific SSO events. Develop normalized performance indicators to evaluate the overall effectiveness of the SSMP. Examples of normalized performance indicators: • Total No of SSO/100 miles of sewer/year • Volume Recovered vs. Total Water Spilled • Volume Discharged to Surface Waters vs. Total Water Spilled	Maintenance/ Engineering		
B.	Is the District able to sufficiently evaluate the effectiveness of SSMP elements based on relevant information?				Prepare written documentation memorializing staff discussions of the success of the performance measures established within 30 days of the discussion/meeting.	Maintenance/ Engineering		
ELEMENT 10 – SSMP PROGRAM AUDITS								
A.	Will the SSMP Audit and the SSO Annual Report be submitted by May 2nd during the year following the end of the calendar year being audited?				No Gap. SSMP audits performed internally but should be completed by objective third party. The internal audit is reviewed and updated collaboratively by both the Engineering and Collection Maintenance Departments.		Completed	
ELEMENT 11 – COMMUNICATION PROGRAM								
A.	Does the District effectively communicate with the public and other agencies about the development and implementation of the SSMP and continue to address any feedback?				No Gaps Identified. The SSMP is posted online and is presented to CVSan's Community Advisory Committee (CAC) for review prior to being accepted by the CVSan Board. The CAC consists of volunteer members of the community representing CVSan's population and interests.		Completed	

(THIS PAGE INTENTIONALLY LEFT BLANK)

APPENDIX T

Board of Directors Approval and Communications

AGENDA FOR REGULAR MEETING OF THE BOARD OF DIRECTORS OF THE CASTRO VALLEY SANITARY DISTRICT TUESDAY, APRIL 4, 2023, 6:30 P.M.

Location: In-person at CVSan's Boardroom, 21040 Marshall Street, Castro Valley, CA and via Teleconference – Please see below.

IMPORTANT NOTICE REGARDING TELECONFERENCED MEETINGS:

Pursuant to applicable state law governing remote attendance at public meetings, please note the following:

- This meeting will be conducted in-person at the location identified above and virtually via the "Zoom Webinar" platform. All members of the public attending virtually who are seeking to observe and/or to address the local legislative body may participate in the meeting in the manner described in the *Public Meeting Teleconference Guidelines* posted on CVSan's website at: www.cvsan.org/virtualmeetings.
- Public comments will be allowed in real time both in-person and through the Zoom platform for the duration of the meeting. If possible, commenters are asked to submit written comments in advance to comments@cvsan.org.

MEETING INFORMATION:

- At the noticed date and time listed above, the Zoom Webinar is accessible at the following web address: https://us02web.zoom.us/j/81112570122?pwd=UlZsWm9KVWdobFMzNURGWGJUS3hjZz09
- You may also participate via telephone by calling: (669) 900-9128. Enter Webinar ID number 811 1257 0122#. There is no participant number. Enter password number 603567#.
- If you experience connectivity issues when joining the meeting, please contact CVSan's Application Support Specialist, Efren Quiroz, at (510) 807-1893 or efren@cvsan.org.

ACCESSIBILITY INFORMATION:

Board meetings are accessible to people with disabilities in compliance with the Americans with Disabilities Act of 1990, and to others who need assistance. Individuals who need special assistance to participate in a CVSan meeting should contact Stacy Marcoux-Powell, Clerk of the Board at (510) 756-0824 or stacy@cvsan.org at least 48 hours prior to the meeting to ensure reasonable arrangements can be made to provide accessibility to the meeting.

1. Call to Order, Roll Call, and Pledge of Allegiance.

2. President's Comments.

Adopt (Roll Call)

3. <u>General Order</u> – Finding and determining that publication and posting of the Notice of Public Hearing for the purpose of hearing and considering all comments, protests, and objections to the proposed amendment of Article IV, Section 4113 of the Castro Valley Sanitary District Code to adjust the

wastewater capacity fee has been properly made. (The Board may adopt the General Order.)

Hearing 4. **Open Public Hearing to hear Comments, Protests, or Objections to the proposed changes to Article IV, Section 4113 of the Castro Valley Sanitary District Code to adjust the wastewater capacity fee, beginning May 1, 2023.** (Members of the public will have three minutes per speaker in which to comment.

Motion 5. **Close Public Hearing.**

Adopt (Roll Call) 6. **<u>Ordinance No. 196</u> – Amending Article IV, Section 4113 of the Castro Valley Sanitary District Code to adjust the wastewater capacity fee.** (The Board may adopt Ordinance No. 196.)

Motion 7. **Consent Calendar.**

- **A. Minutes of the Regular Board meeting on March 7, 2023.**
- **B. Minutes of the Special Board meeting on March 21, 2023.**
- **C. List of Disbursements for the Regular meeting of April 4, 2023.**
- **D. Monthly Report on District Investments and Deposits for February 2023.**
- **E. Monthly Statement of Revenue & Expenses for February 2023.**
- **F. Monthly Statement of Net Position with Previous Month Changes for February 2023.**
- **G. Monthly Statement of Cash Flows for February 2023.**
- **H. Business Services (BS) Department Report for February 2023.**
- **I. Wastewater (WW) Department Report for February 2023.**
- **J. Capital Improvements Projects Report for February 2023.**
- **K. Zero Waste (ZW) Department Report for February 2023.**
- **L. Donation and Supply Request Report for February 2023.**
- **M. Report of WW Committee Meeting for February 23, 2023.**
- **N. Report of O&E Building Project Committee Meeting for February 28, 2023.**
- **O. Report of Finance Committee Meeting for March 8, 2023.**
- **P. Report of Finance Committee Meeting for March 16, 2023.**
- **Q. Report of Communications Committee Meeting for March 17, 2023.**
- **R. Report of Oro Loma Sanitary District (OLSD) Construction Committee Meeting on February 15, 2023.**
- **S. Report of East Bay Dischargers Authority (EBDA) Commission Meeting on February 16, 2023.**
- **T. Board Expenditures Approval for the month of March 2023.**

Comments 8. **Items from the Public.** (Public in attendance may speak on any matter within the jurisdiction of the District Board, limited to three minutes per speaker. Matters not appearing on this Agenda may not be acted upon.)

9. **Regular Calendar.**

Report

- **A. Report of Community Advisory Committee (CAC) Meeting on March 9, 2023.** (Member (Dooman) Woerz will present.)

Motion **B. Draft Solid Waste Rate and Contract Amendments to be Effective July 1, 2023.**

1. **Draft Notice of Public Hearing.** (The Board may approve the draft Notice of Public Hearing, including the meeting format, and set a Public Hearing for the May 2, 2023 Regular Board Meeting.)
2. **Draft Alameda County Industries (ACI) Franchise Agreement effective May 1, 2019 Rate Amendment No. 5.** (The Board may approve the draft ACI Franchise Agreement, Rate Amendment No. 5.)
3. **Draft ACI Franchise Agreement effective May 1, 2019 Contract Amendment No. 4.** (The Board may approve the draft ACI Franchise Agreement, Amendment No. 4.)
4. **Draft Ordinance No. 197 – Article V, Regulation of Solid Waste Disposal, Refuse and Recycling, Sections 5302, 5303, 5306, and 5307 of the Castro Valley Sanitary District Code.** (The Board may approve draft Ordinance No. 197.)

Motion **C. Sewer System Management Plan (SSMP) Internal Audit Acceptance.** (The Board may accept the SSMP Internal Audit.)

Report **D. Report of 2023 California Association of Sanitation Agencies (CASA) Washington D.C. Policy Forum.** (GM Williams will present.)

Update **E. COVID-19 Updates.** (GM Williams will present.)

10. Miscellaneous Comments from Board Members and staff.

11. Adjournment to Closed Session (one item).

A. The Board may adjourn to Closed Session in accordance with Government Code Section 57957 for the evaluation of performance of the General Manager.

12. Reconvene to open meeting and report on any action taken in Closed Session.

Motion **13. Adjournment of Meeting.**

MINUTES OF THE REGULAR MEETING
OF THE BOARD OF DIRECTORS OF THE
CASTRO VALLEY SANITARY DISTRICT
HELD ON APRIL 4, 2023

[1. Call to Order, Roll Call, and Pledge of Allegiance.]

The regular meeting of the Board of Directors of the Castro Valley Sanitary District (CVSan) was called to order by President Akagi at 6:31 p.m. Tuesday, April 4, 2023, at CVSan's main office, located at 21040 Marshall Street. The Pledge of Allegiance was led by President Akagi.

ROLL CALL

PRESENT: DIRECTORS Daniel Akagi, Kristy (Dooman) Woerz, Ralph Johnson, Timothy McGowan, and Dave Sadoff

ABSENT: None

LATE: None

Staff in attendance:
Roland Williams, General Manager (GM)
Christopher Diaz, Legal Counsel
Stacy Marcoux-Powell, Clerk of the Board
Naomi Lue, Zero Waste Supervisor (ZWSup)

[2. President's Comments.]

President Akagi stated he had no comments.

[3. <u>General Order</u> – Finding and determining that publication and posting of the Notice of Public Hearing for the purpose of hearing and considering all the comments, protests, and objections to the proposed amendment of Article IV, Section 4113 of the Castro Valley Sanitary District Code to adjust the wastewater capacity fee has been properly made.]

GM Williams stated the General Order notifies the public that a Public Hearing Notice was properly posted.

President Akagi asked if there were any comments from members of the Board or public. Clerk of the Board Marcoux-Powell stated there were none.

There being no further discussion, a motion was made by Member McGowan to adopt the General Order. The motion was seconded by Member Sadoff and passed on a roll call vote 5 – 0.

	ROLL CALL
AYES:	DIRECTORS Akagi, (Dooman) Woerz, Johnson, McGowan, and Sadoff
NOES:	None
ABSENT:	None
ABSTAIN:	None
	MOTION CARRIED.

[4. Open Public Hearing to hear Comments, Protests, or Objections to the proposed changes to Article IV, Section 4113 of the Castro Valley Sanitary District Code to adjust the wastewater capacity fee, beginning May 1, 2023.]

GM Williams stated that no written protests were received.

President Akagi asked if there were any comments from members of the Board or public. Clerk of the Board Marcoux-Powell stated there were none.

[5. Close Public Hearing.]

There being no further discussion, a motion was made by Member Johnson to close the public hearing. The motion was seconded by Member (Dooman) Woerz and passed on a 5 – 0 vote.

[6. <u>Ordinance No. 196</u> – Amending Article IV, Section 4113 of the Castro Valley Sanitary District Code.]

GM Williams stated that Ordinance No. 196 adjusted the capacity fee by 3.2% and represented an increase from $15,518 to $16,009/unit. He noted the adjustment was based on the recent study conducted by Bartle Wells Associates (Bartle Wells). He also stated that this adjustment is not subject to Proposition 218.

Member Johnson inquired if staff had informed developers with current projects under review about the capacity fee adjustment. GM Williams stated staff had. He noted that two developments had been presented to the Wastewater Committee and that those developers were both eligible to pay the current $15,518 fee within a certain timeframe.

President Akagi asked if there were any comments from members of the public. Clerk of the Board Marcoux-Powell stated there were none.

There being no further discussion, a motion was made by Member McGowan to adopt Ordinance No. 196. The motion was seconded by Member Johnson and passed on a roll call vote 5 – 0.

ROLL CALL

AYES:	DIRECTORS Akagi, (Dooman) Woerz, Johnson, McGowan, and Sadoff
NOES:	None
ABSENT:	None
ABSTAIN:	None

MOTION CARRIED.

[7. Approval of the Consent Calendar.]

The Consent Calendar contained:

A. Minutes of the Regular Board meeting on March 7, 2023.
B. Minutes of the Special Board meeting on March 21, 2023.
C. List of Disbursements for the Regular meeting of April 4, 2023.
D. Monthly Report on District Investments and Deposits for February 2023.
E. Monthly Statement of Revenue & Expenses for February 2023.
F. Monthly Statement of Net Position with Previous Month Changes for February 2023.
G. Monthly Statement of Cash Flows for February 2023.
H. Business Services (BS) Department Report for February 2023.
I. Wastewater (WW) Department Report for February 2023.
J. Capital Improvements Projects Report for February 2023.
K. Zero Waste (ZW) Department Report for February 2023.
L. Donation and Supply Request Report for February 2023.
M. Report of WW Committee Meeting for February 23, 2023.
N. Report of O&E Building Project Committee Meeting for February 28, 2023.
O. Report of Finance Committee Meeting for March 8, 2023.
P. Report of Finance Committee Meeting for March 16, 2023.
Q. Report of Communications Committee Meeting for March 17, 2023.
R. Report of Oro Loma Sanitary District (OLSD) Construction Committee Meeting on February 15, 2023.
S. Report of East Bay Dischargers Authority (EBDA) Commission Meeting on February 16, 2023.
T. Board Expenditures Approval for the month of March 2023.

President Akagi asked if there were any items from the Consent Calendar to be pulled or discussed.

Member Sadoff inquired about Item 7.E., line item *32090 – Other Revenue*, and asked about the 268.27% listed in the *% of Budget* column. GM Williams stated that this amount was due to having received funds in excess of the anticipated amount. He added that it was mostly due to funds received from Alameda County Industries (ACI) for non-performance issues.

President Akagi asked if there were any comments from members of the public. Clerk of the Board Marcoux-Powell stated there were none.

There being no further discussion, a motion was made by Member Sadoff to accept the Consent Calendar. The motion was seconded by Member (Dooman) Woerz and passed on a 5 – 0 vote.

[8. Items from the Public.]

President Akagi asked if there were any comments from members of the public. Clerk of the Board Marcoux-Powell stated there were none.

[9. Regular Calendar.]

A. Report of Community Advisory Committee (CAC) Meeting on March 9, 2023.

Member (Dooman) Woerz stated she attended the CAC meeting on March 9th as the CAC Liaison and noted that the new CAC Member, Sejal Naik, was welcomed by the CAC. She added that CAC Member Naik lives in Castro Valley and has a background in healthcare.

Member (Dooman) Woerz stated that the CAC received an update on the Operations and Engineering (O&E) Building Project, the Inflow and Infiltration (I&I) Reduction Project, and several other projects. She also stated that the CAC was given a presentation on CVSan's Annual Contractors Meeting and that based on the information received, they recommended to staff that CVSan suspend the Annual Contractors Meeting for up to two years.

Member (Dooman) Woerz stated that the CAC received a presentation on the 2023 outreach survey results and that based on the information received, they recommended to staff that CVSan should produce a paper copy of the Calendar and Annual Report (CAR) in 2024 and inform the public that they would need to affirmatively opt-in to receive a paper CAR in 2025. She also stated that the CAC received a presentation on the 2024 calendar theme and recommended that the theme be CVSan's 85th Anniversary.

GM Williams stated that he had missed the meeting due to a travel conflict. He noted that the O&E Building Project Groundbreaking had been moved to Thursday, June 1st. He added that CVSan's Department Heads (DHs) had taken the lead on planning the Groundbreaking ceremony and that it would take place in the early afternoon.

President Akagi asked if there were any comments from members of the public. Clerk of the Board Marcoux-Powell stated there were none.

B. Draft Solid Waste Rate and Contract Amendments to be Effective July 1, 2023.

1. Draft Notice of Public Hearing.

President Akagi asked if there were any comments from members of the Board or public. Clerk of the Board Marcoux-Powell stated there were none.

There being no discussion, a motion was made by Member McGowan to approve the draft Notice of Public Hearing. The motion was seconded by Member Johnson and passed on a 5 – 0 vote.

2. Draft Alameda County Industries (ACI) Franchise Agreement effective May 1, 2019 Rate Amendment No. 5.

ZWSup Lue referred to the memorandum (memo) from HF&H Consultants, LLC (HF&H) included in the agenda packet and stated that the Zero Waste Committee had reviewed and discussed the concepts for the rate and contract adjustments.

HF&H Senior Project Manager, Dave Hilton, referred to the memo and stated it included the following sections: Scope of Work, Background Information, Findings, and Recommendation. He noted that while HF&H determined a 6.3% overall increase was appropriate as a result of inflationary increases in labor-related costs, vehicle-related costs, fuel costs, and all other costs, the contract allowed for no more than a 6% increase.

Member McGowan stated that some contracts which allowed for a cap on increases had a mechanism where increases could be banked and then applied later. Mr. Hilton stated that was not applicable in this contract.

President Akagi asked if there were any comments from members of the public. Clerk of the Board Marcoux-Powell stated there were none.

There being no further discussion, a motion was made by Member Johnson to approve the draft ACI Franchise Agreement Rate Amendment No. 5. The motion was seconded by Member Sadoff and passed on a 5 – 0 vote.

3. Draft ACI Franchise Agreement effective May 1, 2019 Contract Amendment No. 4.

ZWSup Lue read aloud the proposed changes to the Collection and Processing Services (Franchise) Agreement as listed on the first page of the cover memo included in the agenda packet and stated the changes were reviewed at the recent Zero Waste Committee meeting.

Member McGowan referred to the change to Exhibit B1: Updated description for Used Oil Collection and inquired about how the Used Oil Recovery Kit Bags would be handled when it was windy outside. ZWSup Lue stated the bags would be placed by the

driver either under the doormat of the property or half-in and half-out of the bin with the lid closed.

President Akagi asked if there were any comments from members of the public. Clerk of the Board Marcoux-Powell stated there were none.

There being no further discussion, a motion was made by Member McGowan to approve the draft ACI Franchise Agreement Contract Amendment No. 4. The motion was seconded by Member (Dooman) Woerz and passed on a 5 – 0 vote.

4. Draft Ordinance No. 197 – Article V, Regulation of Solid Waste Disposal, Refuse and Recycling, Sections 5302, 5303, 5306, and 5307 of the Castro Valley Sanitary District Code.

ZWSup Lue referred to draft Ordinance No. 197 and stated that the edits were made for CVSan's Code to match the 6% increase in rates listed in item 9.B.2. She also stated there were a few corrections made to Section *5307 – Ancillary Fees*.

President Akagi asked if there were any comments from members of the Board or public. Clerk of the Board Marcoux-Powell stated there were none.

There being no further discussion, a motion was made by Member Sadoff to approve draft Ordinance No. 197. The motion was seconded by Member Johnson and passed on a 5 – 0 vote.

C. Sewer System Management Plan (SSMP) Internal Audit Acceptance.

GM Williams stated that the SSMP is audited internally every two years and an updated SSMP is required to be submitted to the Regional Board every five years. He noted that the goal of the audit is to focus on the effectiveness or deficiencies in the SSMP, as well as in CVSan's practices, and implement corrective measures. He added that this item had been presented to the Wastewater Committee for review.

Member (Dooman) Woerz referred to the Organizational Chart listed in the SSMP and inquired about the listed intern positions. GM Williams stated that CVSan had not utilized interns since the beginning of the COVID-19 pandemic and added that currently, there is not enough room to house extra staff. Member McGowan stated that many of the intern positions were not funded in the recent Budget.

President Akagi asked if there were any comments from members of the public. Clerk of the Board Marcoux-Powell stated there were none.

There being no further discussion, a motion was made by Member Johnson to accept the SSMP Internal Audit. The motion was seconded by Member Sadoff and passed on a 5 – 0 vote.

D. Report of 2023 California Association of Sanitation Agencies (CASA) Washington D.C. Policy Forum.

GM Williams stated that the CASA Washington D.C. Policy Forum (Forum) was action-packed and very informative. He also stated that the two main themes of the Forum were how to obtain infrastructure funding and the regulation, monitoring, and education on per- and polyfluoroalkyl substances (PFAS). He noted that the Environmental Protection Agency (EPA) is working on regulations to state that wastewater agencies will not be held liable for PFAS found in wastewater treatment plants. Member McGowan asked what PFAS removal at wastewater treatment plants looked like. GM Williams stated that is currently unknown.

E. COVID-19 Updates.

GM Williams stated that at the January 17th Special Board meeting, the Board decided that when California's State of Emergency ended on February 28th, staff would remove the plastic barriers in CVSan's Board Room and discontinue the COVID-19 check-in practice. He added that the Board determined masks would still be required during all public meetings.

A brief discussion ensued with each Board Member stating their preference for mask wearing. President Akagi asked if a pre-determined number was established and posted in the Board Room for when a mask mandate would be required at public meetings, could CVSan enforce that requirement legally. Legal Counsel Diaz stated that he would need to research if that would be legally enforceable and would survey other jurisdictions to see if any other agencies had a similar practice in place.

The Board determined that there would not be a mask mandate for Committee meetings but that one would remain in place for Board meetings until Legal Counsel Diaz provided additional information on the topic.

[10. Miscellaneous Comments from Board Members and staff.]

Clerk of the Board Marcoux-Powell stated that the Contra Costa Chapter of the California Special Districts Association (CCSDA) was holding its 30th Anniversary Dinner on Thursday, April 27th. GM Williams and Member (Dooman) Woerz stated that they would like to attend.

Member Johnson stated that he and GM Williams recently attended an EBDA meeting held at OLSD and were able to tour the new training room and kitchen. He also stated that EBDA is making progress on completing their mission and vision statements.

GM Williams stated that the Board recently discussed the EBDA Cargill Mixed Sea Salts Processing and Brine Discharge Project and noted that staff planned to have EBDA GM Jackie Zipkin present on this topic at CVSan's May 15th Special Board meeting.

A ten-minute break was taken at 7:44 p.m.

[11. Adjournment to Closed Session (one item).]

A. The Board may adjourn to Closed Session in accordance with Government Code Section 57957 for the evaluation of performance of the General Manager.

[12. Reconvene to open meeting and report on any action taken in Closed Session.]

President Akagi referred to agenda Item 11.A. and stated the Board performed the evaluation of GM Williams and concluded that he had a favorable performance rating.

[13. Adjournment of Meeting.]

There being no further business to come before the Board, a motion was made by Member Johnson to adjourn the meeting at 8:37 p.m. The motion was seconded by Member McGowan and passed on a 5 – 0 vote.

Respectfully submitted,

Ralph Johnson,
Secretary Pro Tem of the CVSan Board

AGENDA FOR REGULAR MEETING OF THE BOARD OF DIRECTORS OF THE CASTRO VALLEY SANITARY DISTRICT TUESDAY, MAY 2, 2023, 6:30 P.M.

Location: In-person at CVSan's Boardroom, 21040 Marshall Street, Castro Valley, CA and via Teleconference – Please see below.

IMPORTANT NOTICE REGARDING TELECONFERENCED MEETINGS:

Pursuant to applicable state law governing remote attendance at public meetings, please note the following:

- This meeting will be conducted in-person at the location identified above and virtually via the "Zoom Webinar" platform. All members of the public attending virtually who are seeking to observe and/or to address the local legislative body may participate in the meeting in the manner described in the *Public Meeting Teleconference Guidelines* posted on CVSan's website at: www.cvsan.org/virtualmeetings.
- Public comments will be allowed in real time both in-person and through the Zoom platform for the duration of the meeting. If possible, commenters are asked to submit written comments in advance to comments@cvsan.org.

MEETING INFORMATION:

- At the noticed date and time listed above, the Zoom Webinar is accessible at the following web address: https://us02web.zoom.us/j/89925858578?pwd=aDZST2Z4SDl5ZXh1Q0o0YkpTa1NzZz09
- You may also participate via telephone by calling: (669) 900-9128. Enter Webinar ID number 899 2585 8578#. There is no participant number. Enter password number 850492#.
- If you experience connectivity issues when joining the meeting, please contact CVSan's Application Support Specialist, Efren Quiroz, at (510) 807-1893 or efren@cvsan.org.

ACCESSIBILITY INFORMATION:

Board meetings are accessible to people with disabilities in compliance with the Americans with Disabilities Act of 1990, and to others who need assistance. Individuals who need special assistance to participate in a CVSan meeting should contact Stacy Marcoux-Powell, Clerk of the Board at (510) 756-0824 or stacy@cvsan.org at least 48 hours prior to the meeting to ensure reasonable arrangements can be made to provide accessibility to the meeting.

1. Call to Order, Roll Call, and Pledge of Allegiance.

2. President's Comments.

Adopt (Roll Call)

3. General Order – Finding and determining that publication and posting of Notice of Public Hearing for the purpose of hearing and considering all comments, protests, and objections to the proposed amendments of Article V, Regulation of Solid Waste Disposal, Refuse, and Recycling,

Sections 5302, 5303, 5306, and 5307 of the Castro Valley Sanitary District Code to increase the rates charged for solid waste collection has been properly made. (The Board may adopt the General Order.)

Hearing **4.** **Open Public Hearing to hear Comments, Protests, or Objections to the proposed changes to Article V, Regulation of Solid Waste Disposal, Refuse and Recycling, Sections 5302, 5303, 5306, and 5307 of the Castro Valley Sanitary District Code including residential and commercial solid waste services rate increases, beginning July 1, 2023.** (Members of the public will have three minutes per speaker in which to comment.)

Motion **5.** **Close Public Hearing.**

Motion **6.** **Alameda County Industries (ACI) Franchise Agreement effective May 1, 2019, Rate Amendment No. 5.** (The Board may approve the ACI Franchise Agreement, Rate Amendment No. 5.)

Motion **7.** **ACI Franchise Agreement effective May 1, 2019, Contract Amendment No. 4.** (The Board may approve the ACI Franchise Agreement, Contract Amendment No. 4.)

Adopt (Roll Call) **8.** **<u>Ordinance No. 197</u> – Amending Article V, Regulation of Solid Waste Disposal, Refuse, and Recycling, Sections 5302, 5303, 5306, and 5307 of the Castro Valley Sanitary District Code.** (The Board may adopt Ordinance No. 197.)

Presentation **9.** **Presentation to Agata Fedorowicz and Amelia Johnson, 2022/23 winners of the CVSan Environmental Leader Scholarship.**

Motion **10.** **2022/23 Green Ribbon Schools Program Award Recommendation.** (The Board may approve the recommended Green Ribbon Schools Program Awardees.)

Presentation **11.** **2022/23 Green Ribbon School Recipient Presentations. The following 13 school will be recognized: Canyon Middle, Castro Valley Adult and Career Education, Castro Valley Elementary, Castro Valley High, Chabot Elementary, Creekside Middle, Independent Elementary, Jensen Ranch Elementary, Marshall Elementary, Palomares Elementary, Proctor Elementary, Stanton Elementary, and Vannoy Elementary.**

Motion **12.** **Consent Calendar.**

- **A. Minutes of the Regular Board Meeting on April 4, 2023.**
- **B. List of Disbursements for the Regular meeting of May 2, 2023.**
- **C. Monthly Report on District Investments and Deposits for March 2023.**
- **D. Monthly Statement of Revenue & Expenses for March 2023.**
- **E. Monthly Statement of Net Position with Previous Month Changes for March 2023.**
- **F. Monthly Statement of Cash Flows for March 2023.**
- **G. Business Services (BS) Department Report for March 2023.**

H. **Wastewater (WW) Department Report for March 2023.**
I. **Capital Improvements Projects Report for March 2023.**
J. **Zero Waste (ZW) Department Report for March 2023.**
K. **Donation and Supply Request Report for March 2023.**
L. **Report of ZW Committee Meeting for March 13, 2023.**
M. **Report of BS Committee Meeting for March 15, 2023.**
N. **Report of Oro Loma Sanitary District (OLSD) Construction Committee Meeting on March 15, 2023.**
O. **Report of East Bay Dischargers Authority (EBDA) Commission Meeting on March 16, 2023.**
P. **Board Expenditures Approval for the month of April 2023.**

Comments 13. **Items from the Public.** (Public in attendance may speak on any matter within the jurisdiction of the District Board, limited to three minutes per speaker. Matters not appearing on this Agenda may not be acted upon.)

14. **Regular Calendar.**

Adopt (Roll Call) A. **General Order – Finding and Determining that Posting of CVSan Ordinance No. 196 of the Castro Valley Sanitary District has been properly made.** (The Board may adopt the General Order.)

Motion B. **Draft Revisions to Policy No. 5040 – Board Actions and Decisions.** (The Board may approve revisions to Policy No. 5040.)

Motion C. **Sewer System Management Plan (SSMP) Spill Emergency Response Plan Updates.** (The Board may approve the SSMP Emergency Response Plan).

Report D. **Third Quarter FY 2022/23 District Performance Indicators (DPIs) Report.** (GM Williams will present.)

Report E. **Quarterly Legislative Updates.** (GM Williams will present.)

Update F. **COVID-19 Updates.** (GM Williams will provide a verbal update.)

15. **Miscellaneous Comments from Board Members and staff.**

16. **Adjournment to Closed Session (one item).**
A. **The Board may adjourn to Closed Session pursuant to Government Code Section 54957.6 for the conference with labor negotiators. Agency Designated Negotiator: President Akagi. Unrepresented Employee: GM Williams.**

17. **Reconvene to open meeting and report on any action taken in Closed Session.**

Motion 18. **Adjournment of Meeting.**

MINUTES OF THE REGULAR MEETING
OF THE BOARD OF DIRECTORS OF THE
CASTRO VALLEY SANITARY DISTRICT
HELD ON MAY 2, 2023

[1. Call to Order, Roll Call, and Pledge of Allegiance.]

The regular meeting of the Board of Directors of the Castro Valley Sanitary District (CVSan) was called to order by President Akagi at 6:36 p.m. Tuesday, May 2, 2023, at CVSan's main office, located at 21040 Marshall Street. The Pledge of Allegiance was led by President Akagi.

ROLL CALL

PRESENT: DIRECTORS Daniel Akagi, Ralph Johnson, Timothy McGowan, and Dave Sadoff

ABSENT: Kristy (Dooman) Woerz

LATE: None

Staff in attendance:
Roland Williams, General Manager (GM)
Christopher Diaz, Legal Counsel
Stacy Marcoux-Powell, Clerk of the Board
Naomi Lue, Zero Waste Supervisor (ZWSup)

[2. President's Comments.]

President Akagi stated he had no comments.

[3. General Order – Finding and determining that publication and posting of the Notice of Public Hearing for the purpose of hearing and considering all comments, protests, and objections to the proposed amendments of Article V, Regulation of Solid Waste Disposal, Refuse, and Recycling, Sections 5302, 5303, 5306, and 5307 of the Castro Valley Sanitary District Code to increase the rates charged for solid waste collection has been properly made.]

GM Williams stated the General Order notifies the public that a Public Hearing Notice was properly posted.

President Akagi asked if there were any comments from members of the Board or public. Clerk of the Board Marcoux-Powell stated there were none.

There being no discussion, a motion was made by Member Sadoff to adopt the General Order. The motion was seconded by Member McGowan and passed on a roll call vote 4 – 0, with Member (Dooman) Woerz being absent.

	ROLL CALL
AYES:	DIRECTORS Akagi, Johnson, McGowan, and Sadoff
NOES:	None
ABSENT:	DIRECTOR (Dooman) Woerz
ABSTAIN:	None
	MOTION CARRIED.

[4. Open Public Hearing to hear Comments, Protests, or Objections to the proposed changes to Article V, Regulation of Solid Waste Disposal, Refuse, and Recycling, Sections 5302, 5303, 5306, and 5307 of the Castro Valley Sanitary District Code including residential and commercial solid waste services rate increases, beginning July 1, 2023.]

Member Sadoff inquired if any written protests had been submitted. GM Williams stated that none had been received.

President Akagi asked if there were any comments from members of the public. Clerk of the Board Marcoux-Powell stated there were none.

[5. Close Public Hearing.]

There being no further discussion, a motion was made by Member McGowan to close the public hearing. The motion was seconded by Member Johnson and passed on a 4 – 0 vote, with Member (Dooman) Woerz being absent.

[6. Alameda County Industries (ACI) Franchise Agreement effective May 1, 2019, Rate Amendment No. 5.]

ZWSup Lue referred to the documents included in the agenda packet and stated that no changes had been made to the draft documents that were presented to the Board at last month's meeting.

President Akagi asked if there were any comments from members of the Board or public. Clerk of the Board Marcoux-Powell stated there were none.

There being no discussion, a motion was made by Member Johnson to approve Rate Amendment No. 5. The motion was seconded by Member Sadoff and passed on a 4 – 0 vote, with Member (Dooman) Woerz being absent.

[7. ACI Franchise Agreement effective May 1, 2019, Contract Amendment No. 4.]

GM Williams stated that the previous item presented to the Board was for rate adjustments and noted that this item was for language adjustments to the Franchise Agreement.

ZWSup Lue referred to the documents included in the agenda packet and stated that no changes had been made to the draft documents that were presented to the Board at last month's meeting.

President Akagi asked if there were any comments from members of the Board or public. Clerk of the Board Marcoux-Powell stated there were none.

President Akagi asked if there were any comments from members of the public. Clerk of the Board Marcoux-Powell stated there were none.

There being no further discussion, a motion was made by Member McGowan to approve Contract Amendment No. 4. The motion was seconded by Member Johnson and passed on a 4 – 0 vote, with Member (Dooman) Woerz being absent.

[8. <u>Ordinance No. 197</u> – Amending Article V, Regulation of Solid Waste Disposal, Refuse, and Recycling, Sections 5302, 5303, 5306, and 5307 of the Castro Valley Sanitary District Code.]

GM Williams stated that this Ordinance reflects the Board's previous action of approving the Franchise Agreement's rate adjustments.

President Akagi asked if there were any comments from members of the Board or public. Clerk of the Board Marcoux-Powell stated there were none.

There being no further discussion, a motion was made by Member McGowan to adopt Ordinance No. 197. The motion was seconded by Member Sadoff and passed on a roll call vote 4 – 0, with Member (Dooman) Woerz being absent.

	ROLL CALL
AYES:	DIRECTORS Akagi, Johnson, McGowan, and Sadoff
NOES:	None
ABSENT:	DIRECTORS (Dooman) Woerz
ABSTAIN:	None
	MOTION CARRIED.

[9. Presentation to Agata Fedorowicz and Amelia Johnson, 2022/23 winners of the CVSan Environmental Leader Scholarship.]

GM Williams stated that this is the 10th year that CVSan had offered this scholarship to students who demonstrate environmental leadership and explained the

eligibility requirements. He noted that there were two scholarship winners who were receiving awards to use for the 2023/24 academic year.

ZWSup Lue stated the first recipient was Agata Fedorowicz, who currently attends Castro Valley High School (CVHS) while working at Cleaner and Greener, and who volunteers her time with ForestR.org to help with litter pickup, land restoration, and gleaning fruit. She noted that gleaning has been an area of focus for Ms. Fedorowicz and added that she, along with her family, friends, and other volunteers, have gleaned thousands of pounds of fruit over the last few years and donated it to food pantries for people in need. ZWSup Lue stated Ms. Fedorowicz has been an active volunteer for many CVSan Earth Day Clean-ups and Zero Waste Week Gleaning Events. She noted that Ms. Fedorowicz plans to study Art later this year at California State University East Bay and congratulated her on winning the scholarship.

ZWSup Lue stated the second recipient was Amelia Johnson, who has served as a member of Leadership at CVHS for the last three school years and currently serves as one of Leadership's Environmental Commissioners and works for the Youth Task Force Team. She noted that Ms. Johnson has volunteered for the last two years at the Oakland Zoo working on habitat restoration in the giraffe and bear exhibits. She also stated that Ms. Johnson is involved in the community as a counselor for 6th grade students for Outdoor School, teaching students about ecosystems and the importance of the environment. ZWSup Lue stated that Ms. Johnson has worked to improve environmental messaging, exposure, and outreach through social media channels and added that through her work as Environmental Commissioner at CVHS, she worked on the Green Ribbon application this year.

President Akagi thanked both scholarship winners for their efforts to educate others and reduce waste at CVHS and in the community.

[10. 2022/23 Green Ribbon Schools Program Award Recommendation.]

GM Williams stated that 15 years ago, CVSan developed the Green Ribbon Schools program to guide schools towards sustainable implementation of waste reduction and recycling programs. He noted that 13 of the 17 eligible schools were Green Ribbon certified for the 2022/23 school year.

ZWSup Lue stated that schools were required to complete a minimum of 31 activities and had to achieve a minimum 85% diversion rate.

President Akagi asked if there were any comments from members of the Board or public. Clerk of the Board Marcoux-Powell stated there were none.

There being no discussion, a motion was made by Member Sadoff to approve the 2022/23 Green Ribbon Schools Program Award recommendation. The motion was seconded by Member Johnson and passed on a 4 – 0 vote, with Member (Dooman) Woerz being absent.

[11. 2022/23 Green Ribbon School Recipient Presentations. The following 13 schools will be recognized: Canyon Middle, Castro Valley Adult and Career Education, Castro Valley Elementary, Castro Valley High, Chabot Elementary, Creekside Middle, Independent Elementary, Jensen Ranch Elementary, Marshall Elementary, Palomares Elementary, Proctor Elementary, Stanton Elementary, and Vannoy Elementary.]

ZWSup Lue stated that she was pleased with what the schools had accomplished and noted that CVSan had reduced the number of minimum items this year to help schools with the return to all students on campus.

ZWSup Lue recognized the following schools for their achievements:

1. Canyon Middle (Green Team) completed 33 activities with a diversion rate of 93% and received $1,820.
2. Castro Valley Adult and Career Education (Strides Day Program) completed 38 activities with a diversion rate of 91% and received $1,400.
3. Castro Valley Elementary (CVE Green Team) completed 43 activities with a diversion rate of 92% and received $1,420.
4. Castro Valley High (Environmental Commissioners) completed 35 activities with a diversion rate of 95% and received $1,980.
5. Chabot Elementary (Natalie Howe, Chelsea Anderson, and Nicole Garibaldi) completed 49 activities with a diversion rate of 89% and received $1,510.
6. Creekside Middle (Leadership Class) completed 35 activities with a diversion rate of 92% and received $1,310.
7. Independent Elementary completed 48 activities with a diversion rate of 92% and received $1,620.
8. Jensen Ranch Elementary (Jensen Ranch Green Team, Tamara Reneau, Melissa Rusk, and Minhee Song) completed 40 activities with a diversion rate of 92% and received $1,270.
9. Marshall Elementary completed 50 activities with a diversion rate of 93% and received $1,570.
10. Palomares Elementary completed 46 activities with a diversion rate of 91% and received $1,220.
11. Proctor Elementary (Amina Perez) completed 40 activities with a diversion rate of 85% and received $1,370.
12. Stanton Elementary (Gina Faria and Mark Carroll) completed 34 activities with a diversion rate of 91% and received $1,200.
13. Vannoy Elementary (Stafont Smith and the Courageous Cougars) completed 40 activities with a diversion rate of 92% and received $1,360.

ZWSup Lue stated that all the schools together had a 93% diversion rate and noted that is the highest Green Ribbon schools have ever had. She congratulated all the schools, and a group photo was taken.

[12. Approval of the Consent Calendar.]

The Consent Calendar contained:

A. **Minutes of the Regular Board meeting on April 4, 2023.**
B. **List of Disbursements for the Regular meeting of May 2, 2023.**
C. **Monthly Report on District Investments and Deposits for March 2023.**
D. **Monthly Statement of Revenue & Expenses for March 2023.**
E. **Monthly Statement of Net Position with Previous Month Changes for March 2023.**
F. **Monthly Statement of Cash Flows for March 2023.**
G. **Business Services (BS) Department Report for March 2023.**
H. **Wastewater (WW) Department Report for March 2023.**
I. **Capital Improvements Projects Report for March 2023.**
J. **Zero Waste (ZW) Department Report for March 2023.**
K. **Donation and Supply Request Report for March 2023.**
L. **Report of ZW Committee Meeting for March 13, 2023.**
M. **Report of BS Committee Meeting for March 15, 2023.**
N. **Report of Oro Loma Sanitary District (OLSD) Construction Committee Meeting on March 15, 2023.**
O. **Report of East Bay Dischargers Authority (EBDA) Commission Meeting on March 16, 2023.**
P. **Board Expenditures Approval for the month of April 2023.**

President Akagi asked if there were any items from the Consent Calendar to be pulled or discussed. There were none.

President Akagi asked if there were any comments from members of the public. Clerk of the Board Marcoux-Powell stated there were none.

There being no discussion, a motion was made by Member Sadoff to accept the Consent Calendar. The motion was seconded by McGowan and passed on a 4 – 0 vote with Member (Dooman) Woerz being absent.

[13. Items from the Public.]

President Akagi asked if there were any comments from members of the public. Clerk of the Board Marcoux-Powell stated there were none.

[14. Regular Calendar.]

A. <u>General Order</u> – Finding and Determining that Posting of CVSan Ordinance No. 196 of the Castro Valley Sanitary District has been properly made.

GM Williams stated the General Order notifies the public that Ordinance No. 196 was adopted by the Board and was properly posted.

President Akagi asked if there were any comments from members of the Board or public. Clerk of the Board Marcoux-Powell stated there were none.

There being no discussion, a motion was made by Member Johnson to adopt the General Order. The motion was seconded by Member McGowan and passed on a roll call vote 4 – 0, with Member (Dooman) Woerz being absent.

	ROLL CALL
AYES:	DIRECTORS Akagi, Johnson, McGowan, and Sadoff
NOES:	None
ABSENT:	DIRECTOR (Dooman) Woerz
ABSTAIN:	None
	MOTION CARRIED.

B. Draft Revisions to Policy No. 5040 – Board Actions and Decisions.

GM Williams stated that updates to Policy No. 5040 are recommended to clarify that the Board has authority to approve or reject the employment or dismissal of the General Manager only, and not other CVSan staff. He noted that this was reviewed by Legal Counsel Diaz, and by the Business Services Committee. He added that the Committee recommended the updates for the full Board approval.

Member Sadoff stated he thought GM Williams had the freedom to make all hiring and dismissal decisions. GM Williams stated that was correct and that updating the policy would help align the policy with practice.

Member McGowan referred to Policy No. 5040, Section 5040.1.4. and stated that GM Williams has a signing authority which allows contracts under $60,000 to not be brought before the Board. President Akagi stated that authority was not in conflict with the policy and noted that it was just not mentioned. Legal Counsel Diaz suggested changing the wording in that Section to "Approval or rejection of any contract or expenditure unless otherwise delegated."

This item was tabled to allow staff to make the necessary corrections to Policy No. 5040.

President Akagi asked if there were any comments from members of the Board or public. Clerk of the Board Marcoux-Powell stated there were none.

C. Sewer System Management Plan (SSMP) Spill Emergency Response Plan Updates.

GM Williams stated that late last year, the California State Water Resources Control Board (State Water Board) adopted new Sanitary Sewer System-Waste Discharge Requirements (SSS-WDR). He also stated that the new SSS-WDR will require

significant updates and revisions to CVSan's existing Sewer System Management Plan (SSMP). He noted that many of the updates are required to be implemented by August 2, 2025 and added that the updated Element 6: Spill Emergency Response Plan (SERP) must be adopted and implemented no later than June 4, 2023. GM Williams stated that ultimately, the required changes were minor in nature and added that other agencies agreed that the changes were not significant.

Member Johnson referred to the report included in the agenda packet, Table 6.1: SSO Additional Contacts, and stated that the Alameda County (County) Public Works Agency contact, Kyle Carbert, is no longer working for the County. GM Williams stated he would have staff make that revision.

President Akagi asked if there were any comments from members of the public. Clerk of the Board Marcoux-Powell stated there were none.

There being no further discussion, a motion was made by Member Johnson to approve the SSMP Spill Emergency Response Plan. The motion was seconded by Member Sadoff and passed on a 4 – 0 vote, with Member (Dooman) Woerz being absent.

D. Third Quarter FY 2022/23 District Performance Indicators (DPIs) Report.

GM Williams referred to the report included in the agenda packet and stated that staff is consistently performing at a high level.

President Akagi asked if there were any comments from members of the public. Clerk of the Board Marcoux-Powell stated there were none.

E. Quarterly Legislative Updates.

GM Williams stated that there were two letters for the Board to review, one was included in the agenda packet, and one placed at each of their seats on the dais. He noted that the letter on the dais was a signed coalition letter for continued financial support for Senate Bill (SB) 1383 and the letter included in the packet was a support letter for SB 707 – Responsible Textile Recovery Act of 2023.

GM Williams stated that Assembly Bill (AB) 246, if passed, would prohibit any person from manufacturing, distributing, selling, or offering for sale in California any menstrual products that contain regulated per- and polyfluoroalkyl substances (PFAS), and requires a manufacturer to use the least toxic alternative when removing regulated PFAS in menstrual products to comply with these provisions. Member Sadoff stated he recently read an article from General Atomics about how their Supercritical Water Oxidation (iSCWO) system provides an environmentally safe and effective way to destroy PFAS. He added that it is nice that technology is helping with this issue.

GM Williams stated that the California Association of Sanitation Agencies (CASA) authored AB 759 which seeks to modernize the procedures involved in sanitary districts'

approval for issuing checks. He noted that the current protocol, established in the 1930's, requires sanitary districts to have the Board approve each check before it is issued. He added that most sanitary districts are not following this protocol. Member McGowan stated that this bill had recently been passed. GM Williams stated that based on the timing of staff pulling the report for the Board and when the Board meetings are held, sometimes the reports are slightly out of date.

President Akagi asked if there were any comments from members of the public. Clerk of the Board Marcoux-Powell stated there were none.

F. COVID-19 Updates.

Legal Counsel Diaz stated that the Board recently tasked him with polling other agencies to identify whether the Board can mandate that facemasks be worn during Board meetings. He noted that the public has a right to attend meetings and therefore the Board cannot make wearing facemasks a condition to attend any public meeting. He added that there is no case law at this point to help guide the Board. He also stated that the County states on their website that if a business requires the public to wear facemasks, then they must adhere. Legal Counsel Diaz stated that no other agency he spoke with still requires facemasks to be worn during public meetings. He noted that he recommended that facemasks be a recommendation versus a requirement.

A brief discussion ensued about comfortability levels regarding facemask wearing and observations out in the public. Member Sadoff asked that this item be agendized at the June Regular Board meeting.

President Akagi asked if there were any comments from members of the public. Clerk of the Board Marcoux-Powell stated there were none.

[15. Miscellaneous Comments from Board Members and staff.]

Clerk of the Board Marcoux-Powell confirmed that the OLSD Construction Committee meeting for July was being moved to July 19th. She also stated she would email Members (Dooman) Woerz and McGowan to schedule a Finance Committee meeting in May.

Clerk of the Board Marcoux-Powell stated that she would be routing a Green Ribbon Schools sign-up sheet to the Board. She noted that anyone attending an event on a school site would need to complete the Live Scan Fingerprinting process.

Member McGowan stated that Central Contra Costa Sanitary District (Central San) Board Member David Williams had recently passed away and noted that Florence Wedington, P.E., had replaced Mr. Williams on the Central San Board.

Member Johnson stated that he recently scheduled a bulky pickup and noted that it was a smooth and issue-free process. He also stated that his grandson, Ryan Joseph,

is doing very well after his wrestling match injury in 2018. He noted that Ryan will be graduating from Diablo Valley College (DVC) soon and has been accepted to the Universities of California, Berkeley, Davis, and Santa Barbara, as well as San Francisco State University. He added that his family is very proud of Ryan. Member Sadoff inquired about Ryan's major. Member Johnson stated Ryan will be studying history and wants to be a politician.

GM Williams stated that CVSan recently held its annual Earth Day and Recycles Day Events. He thanked ZWSup Lue and the Zero Waste Department staff for all their hard work to coordinate the events. He also stated that the groundbreaking event for CVSan's new Operations and Engineering (O&E) Building Project will be held on June 1, 2023 and noted that it will be a good event. He added that the bond financing resolution will be brought before the Board in June or July.

ZWSup Lue thanked Member Sadoff for working the Recycles Day Event and stated that 1,300 cars came through the event line via appointments. She noted that there were 400 – 500 Earth Day volunteers and added that it was a wonderful event. ZWSup Lue stated that CVSan's Textile Collection Week is scheduled for June 5 – 9, 2023.

Everyone wished GM Williams a happy birthday!

[16. Adjournment to Closed Session (one item).]

A. The Board may adjourn to Closed Session pursuant to Government Code Section 54957.6 for the conference with labor negotiators. Agency Designated Negotiator: President Akagi. Unrepresented Employee: GM Williams.

[17. Reconvene to open meeting and report on any action taken in Closed Session.]

President Akagi referred to agenda Item 16.A. and stated the Board gave direction to the Designated Negotiator.

[18. Adjournment of Meeting.]

There being no further business to come before the Board, a motion was made by Member Sadoff to adjourn the meeting at 9:00 p.m. The motion was seconded by Member Johnson and passed on a 4 – 0 vote with Member (Dooman) Woerz being absent.

Respectfully submitted,

Ralph Johnson

Ralph Johnson,
Secretary Pro Tem of the CVSan Board

(THIS PAGE INTENTIONALLY LEFT BLANK)